LA-UR- 08-5270

Approved for public release; distribution is unlimited.

Title: Multi-Wire Proportional Chamber for Detecting Ultra-Cold Neutron

Author(s): C. L. Morris, et. al.

Intended for: Nuclear Instruments and Methods

Los Alamos
NATIONAL LABORATORY
EST. 1943

Los Alamos National Laboratory, an affirmative action/equal opportunity employer, is operated by the Los Alamos National Security, LLC for the National Nuclear Security Administration of the U.S. Department of Energy under contract DE-AC52-06NA25396. By acceptance of this article, the publisher recognizes that the U.S. Government retains a nonexclusive, royalty-free license to publish or reproduce the published form of this contribution, or to allow others to do so, for U.S. Government purposes. Los Alamos National Laboratory requests that the publisher identify this article as work performed under the auspices of the U.S. Department of Energy. Los Alamos National Laboratory strongly supports academic freedom and a researcher's right to publish; as an institution, however, the Laboratory does not endorse the viewpoint of a publication or guarantee its technical correctness.

Form 836 (7/06)

Multi-Wire Proportional Chamber for Detecting Ultra-Cold Neutrons

C. L. Morris, T. J. Bowles, J. Gonzales, R. Hill, G. Hogan, M. Makela, R. Mortenson, J. Ramsey, A. Saunders, S. J. Seestrom, W. E. Sondheim, and W. Teasdale
Los Alamos National Laboratory, Los Alamos, NM 87544
H. O. Back, R. W. Pattie Jr., A. T. Holley and A. R. Young
North Carolina State University, Raleigh, NC 27695
L.J. Broussard
Duke University, Durham, NC 27708
K. P. Hickerson , J. Liu, and B. Plaster
California Institute of Technology, Pasadena, CA 91125
R.R. Mammei, M. Pitt, and R. B. Vogelaar
Virginia Polytechnic Institute and State University, Blacksburg, VA 24061
R. Rios
Idaho State University, Pocatello, *ID, 83209*
J. Martin
University of Winnipeg, Winnipeg, MB R3B 2E9

Abstract In this paper we describe the principles that have guided our design and the experience we have gained building multi-wire proportional chambers detectors for the ultra cold neutron source in Los Alamos. Simple robust detectors with 50cm^2 of active area have been designed. These have been used both in ion chamber and proportional mode for the detection of ultra cold neutrons.

Introduction

The interaction of neutrons with material is determined by the material's nuclear potential. At sufficiently low energies the neutron wave length is long enough so that a material surface presents a potential barrier to an incident neutron beam, the Fermi potential, V_F:[1]

$$V_F = \frac{2\pi\hbar^2}{m} Na .$$

where m is the neutron mass, N is the number density of the material, and a is the coherent nuclear scattering length. At sufficiently low energies, neutrons can be trapped in material bottles of materials with positive scattering length. ^{58}Ni presents one of the largest potentials of available materials, 342 nV. Neutrons with kinetic energies below this are referred to as ultra-cold neutrons (UCN).

The ability to transport, store, and manipulate the spins of UCN has lead to a broad experimental program using ultra cold neutrons that has been reviewed by Ignotovitch,[2] and by Golub, Richardson, and Lamoreaux.[3] Recently, new technologies have been developed for producing UCN that promise sources with higher intensities and fluxes than have been obtained from reactor driven sources.[4,5,6,7] In this paper we describe UCN detectors that have been developed and that are in use at the UCN source at the Los Alamos Neutron Science Center (LANSCE).

Design

Little is published on the design and construction of proportional chambers for detecting UCN. The idea of using gas-filled detectors for thermal neutrons goes back to Fermi.[8] Here we describe robust and simple multi-wire proportional detectors that have been designed to monitor the UCN flux from the Los Alamos UCN source. Our first detectors used $^{10}BF_3$ as the fill gas in a proportional detector. Thermal neutrons are absorbed by the reaction ^{10}B(n,t)7Li, releasing 2.79 MeV of kinetic energy in the charged particles that ionize the gas. The resulting electrons are collected and amplified in the high electric field around a small diameter anode wire that is placed at several kV of potential relative to the tube that contains the gas.

^{3}He provides a safer alternative to $^{10}BF_3$ through the reaction 3He(n,p)^{3}H, with a Q-value of 0.764 MeV. ^{3}He gas doesn't have the stopping power of BF_3, so detectors are often filled with an additional stopping gas that produces higher ionization energy loss and stopping power for the energetic ions produced in the neutron capture reaction.

After the reaction, the triton has energy of 191 keV and the proton, 573 keV. Fluorocarbon stopping gases are ideal because they provide high stopping power and small neutron absorption cross sections. At 1 bar of pressure and temperature 20 C, the sum of the ranges in CF^4 of the two charged particles is 0.48 cm compared to 1.60 cm in argon and 6.0 cm in ^{3}He. In order to obtain the best signal to noise the detector must have an active length large compared to the ranges in order to reduce the fraction of events where energy is lost in the detector walls rather than in the active gas volume.

The thermal neutron cross section for the reaction 3He(n,p)t is $\sigma = 5.333$ kb. At low energies the lifetime ($\tau = \frac{1}{\rho\sigma v}$, where ρ is the ^{3}He number density) is independent of neutron velocity because the cross section varies like $1/v$ with neutron velocity, v. For gas mixtures where the neutron absorption is dominated by capture on ^{3}He the lifetime is, $\tau = \frac{3.55\times10^{-5}}{P}$ seconds, where P is the ^{3}He pressure in bar. Neutrons with v=5 m/sec have a mean free path of $l = v\tau$ of 9 mm with 20 mbar of ^{3}He pressure. The detector must be several mean free paths thick in order to optimize detector efficiency and the mean free path needs to be larger than the charged particle range to minimize wall effects.

We have designed a detector, shown in Figure 1, that is approximately planar. The detector incorporates two cathodes held at ground, the entrance window and a copper circuit board. At the approximate center is an anode plane which is held at high voltage. The active volume is determined by the distance between the two cathode planes, 5 cm. Grid planes, spaced 2.5 mm from the anode, ensure uniform fields (the entrance window is held by a flange, and is bowed by the gas pressure).

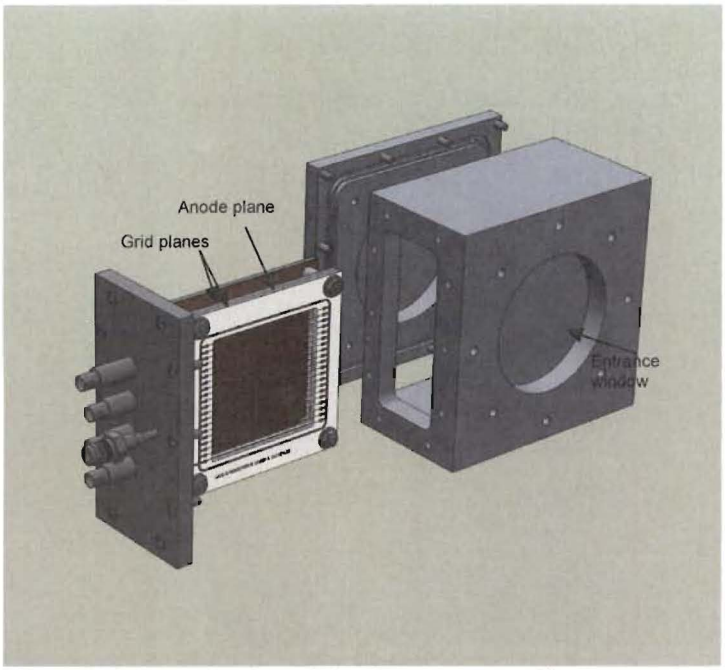

Figure 1) Schematic view of the detector assembly.

The anode planes were constructed on a FR-80 frame with 20 μm gold plated tungsten wires spaced by 2 mm and wound at 50 gm of tension. The wires were epoxied to the plane and soldered to copper tabs. The ends of the wire plane were terminated with 75 μm beryllium-copper guard wires wound at 100 gm of tension. The grid planes were of similar construction with 2 mm spaced 75 μm gold-plated copper-clad aluminum wire also at 50 gm of tension.

For detecting UCN one must use low absorption materials for the entrance windows. We used aluminum alloy windows (6061 T6) which are strong, robust and provide relatively low losses. The window in the detector presents both a potential barrier and introduces UCN losses due to absorption and scattering. With the detector mounted 1 m below the beam line (using gravity to accelerate the UCN) we have measured the transmission of UCN falling though a 0.025 cm thick window to be 50%. Monte Carlo modeling suggests about half of the losses are absorption in the material and half are due reflections off of the non-specular surface.

Recently, we have measured the strength and transmission of UCN through zirconium metal foils. 50 micron zirconium is capable of robustly supporting >4 bar of pressure with about 80% transmission. We hope to try this as a detector foil soon.

Results

We present a typical spectrum obtained for UCN from the LANSCE source with one of these detectors mounted after a fall of one meter into the detector in Figure 2. The detector was operated with 2600 V on the anode and 390 V on the cathode. The pulses were amplified with an Ortec 142PC preamplifier and shaping amplifier and read into a peak sensing ADC. The detector gain at this voltage is ~6. The cosmic and gamma ray

backgrounds are low in this set up so that the edges due to wall effects are apparent in the histogram. The typical resolution was 3% for the five detectors that were tested.

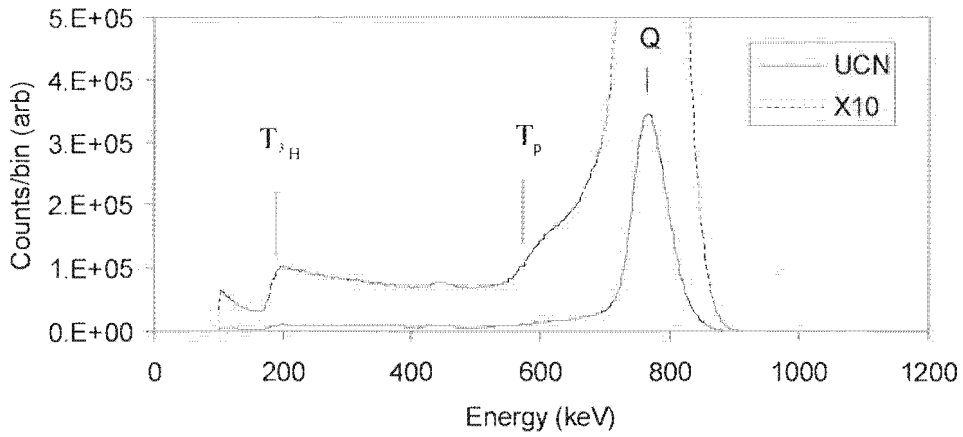

Figure 2) Pulse height spectrum obtained with a UCN beam. The detector is operating with VA=2600 V and VC=390 V. The spectra shows a peak at the 3He(n,p)3H Q-value as well as edges at the energies of both reaction products due to wall effects, indicated by arrows.

In earlier work we used detectors of a similar construction in ion chamber mode. In the laboratory this mode of running provides similar resolution and high gain stability, but was much more susceptible to both electronic and microphonic noise. Maintaining good resolution in detectors with gas gain required tighter dimensional tolerances (we achieved ~100 μm precession in wire spacing and plane spacing), but reduced the susceptibility to electronic and microphonic noise to negligible levels.

The relative detector efficiency as a function of 3He fill pressure, for both thermal and ultra-cold neutrons is shown in

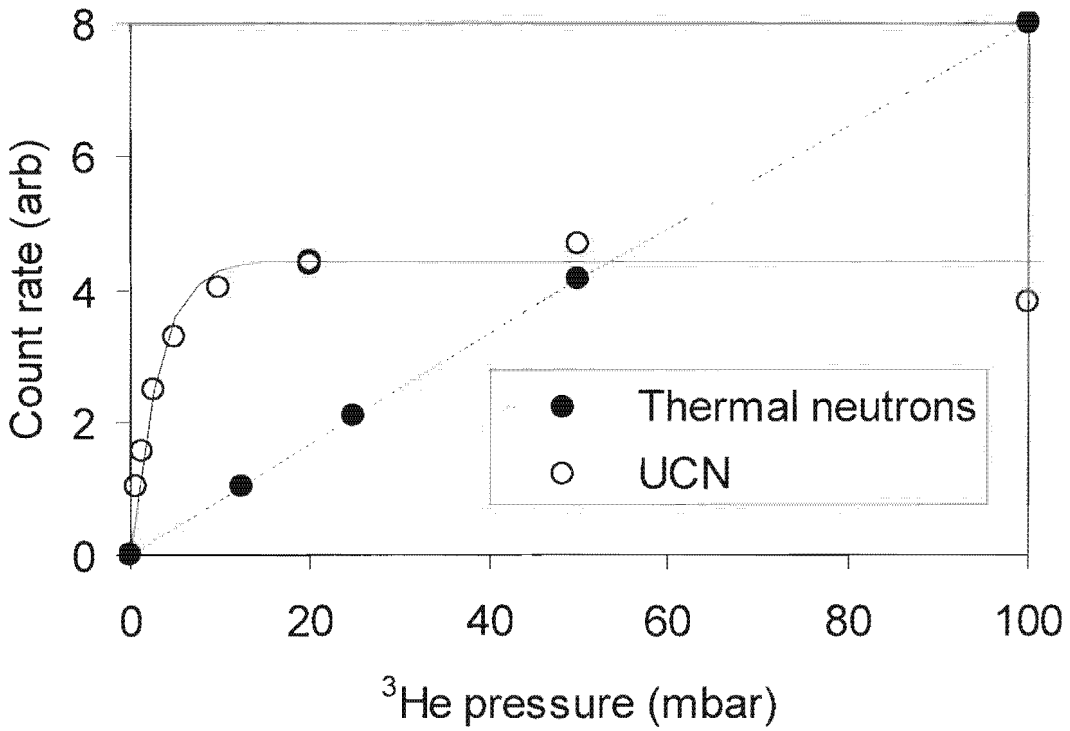

Figure 3. For thermal neutrons the efficiency is linear with 3He, but for UCN the efficiency saturates at relatively low 3He pressure as expected.

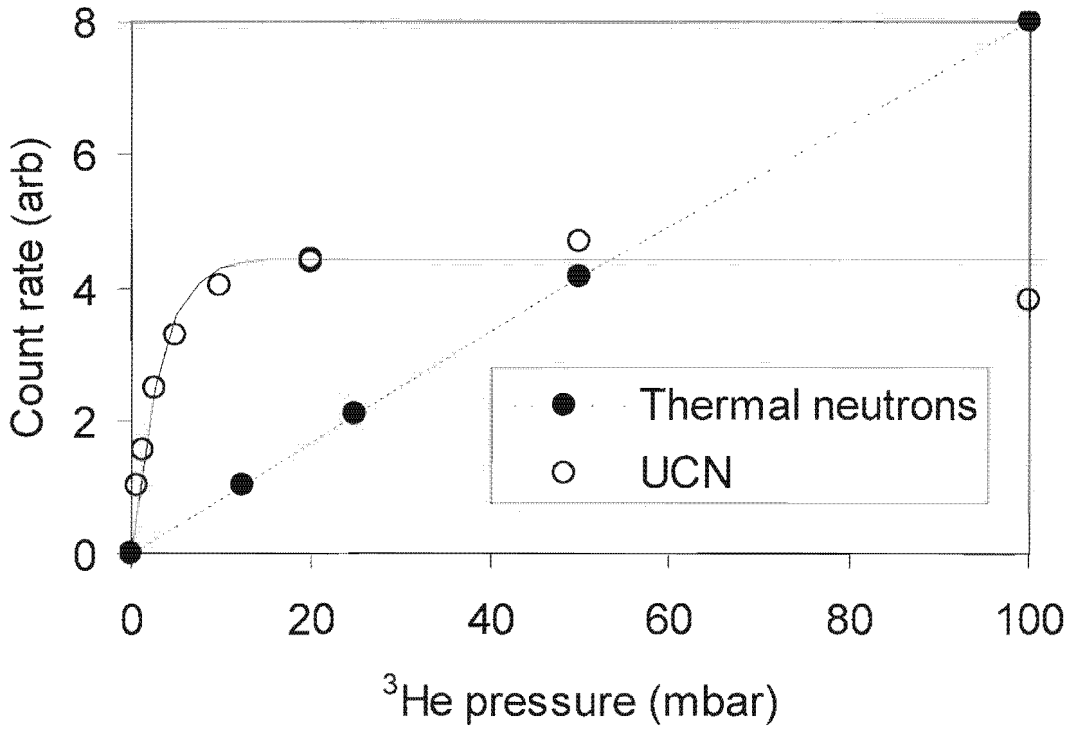

Figure 3) Relative neutron efficiency for a moderated 252Cf source (dashed line) and for UCN (solid line) as a function of 3He partial pressure. The solid curve through the UCN data is a calculation of the efficiency.

In Figure 4 we plot the relative full energy efficiency for thermal neutrons as a function of stopping gas pressure. For thermal neutrons, to a good approximation, the interactions are distributed uniformly through the detector, the efficiency is observed to plateau at about 1 bar of CF_4. One bar provides sufficient stopping for both thermal and UCN. Therefore, we have chosen a conservative combination of a 0.025 cm 6061 T6 aluminum window with 1 bar of stopping gas pressure.

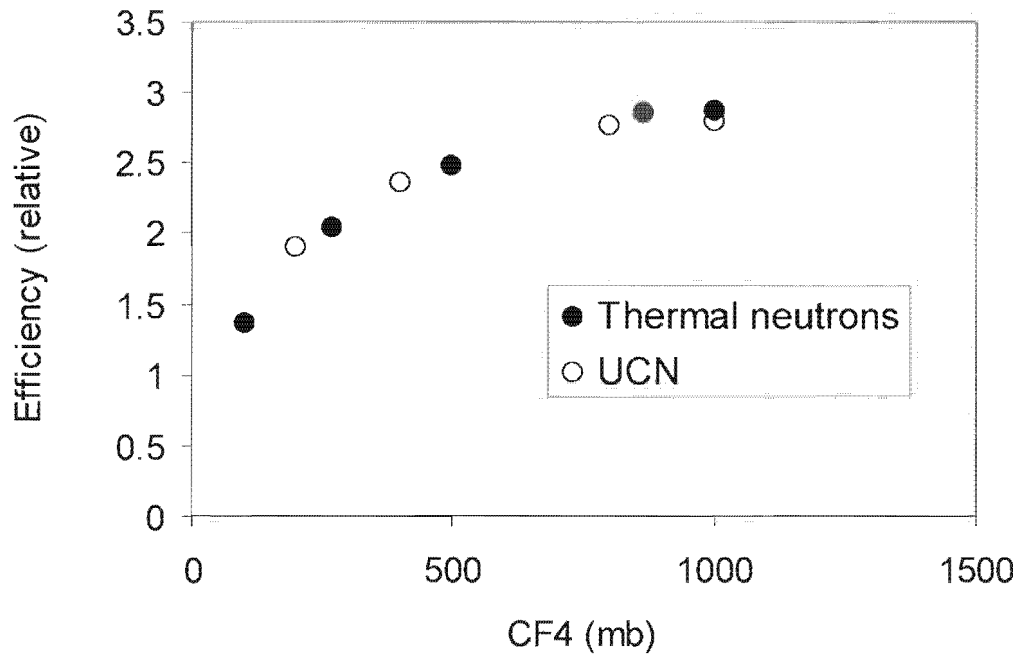

Figure 4) Relative efficiency of the full energy peak as a function of stopping gas pressure. The voltage was adjusted at each pressure to give a constant gain.

Conclusions

A simple and robust design for a multi-wire 3He ultra-cold neutron detector has been presented. The performance has been measured for both thermal and ultra-cold neutrons. The pulse-height resolution was measured to be 3%. The full energy efficiency is 80% for neutrons that make it through the entrance window. Transmission through the window for neutrons that are dropped 1 m into the detector was measured to be 50%.

Acknowledgments

This work has been supported by the USDOE, by the NSF and by Los Alamos National Laboratory internal funding (LDRD)

[1] E. Fermi and W. N. Zinn, Phys. Rev. 70, (1946) 103.

[2] V. K. Ignatovitch, "Physics of Ultra-cold Neutrons," (Oxford: Clarendon) English translation of the 1986 work.

[3] R. Golub, D Richardson, and S. K. Lamoraux, "Ultra-Cold Neutrons,"Adam Hilger, Bristol, Philadelphia and New York (1991).

[4] Y. Masuda, T. Kitagaki, K. Hatanaka, M. Higuchi, S. Ishimoto, Y. Kiyanagi, K. Morimoto, S. Muto, and M. Yoshimura, Phys. Rev. Lett. **89**, 284801 (2002)

[5] A. Saunders, J. M. Anaya, T. J. Bowles, B. W. Filippone, P. Geltenbort, R. E. Hill, M. Hino, S. Hoedl, G. E. Hogan, T. M. Ito, K. W. Jones, T. Kawai, K. Kirch, S. K. Lamoreaux, C. -Y. Liu, M. Makela, L. J. Marek, J. W. Martin, C. L. Morris, R. N. Mortensen, A. Pichlmaier, 2, S. J. Seestrom, A. Serebrov, D. Smith, W. Teasdale, B. Tipton, R. B. Vogelaar, A. R. Young and J. Yuan," Demonstration of a solid deuterium source of ultra-cold neutrons", Physics Letters B, 593 (2004) 55-60.

[6] E. Korobkina, B.W. Wehring, A.I. Hawari,_, A.R. Young, P.R. Huffman, R. Golub, Y. Xu, G. Palmquist, "An ultracold neutron source at the NC State University PULSTAR reactor," Nuclear Instruments and Methods in Physics Research A 579 (2007) 530–533.
[7] A. Fomin et al., PSI Report TM-14-01-01 (2000)
[8] E Fermi, J. Marshall, and L. Marshall, "A Thermal Netron Velocity Selector and its Application to the Measurement of the Cross Section of Boron," Phys. Rev. 72 (1947) 192-196.