LA-UR- 09-06535

Approved for public release; distribution is unlimited.

Title: A Study of Liquid Helium Scintillation in the Presence of an Electric Field for the nEDM Experiment.

Author(s): Takeyasu Ito, Steven Clayton, John Ramsey, Maciej Karcz, Chen-Yu Liu, Josh Long, Hans-Otto Meyer, Goverdhan Reddy

Intended for: 3rd American Physical Society and Japanese Physical Society Joint Division of Nuclear Physics Meeting

Los Alamos
NATIONAL LABORATORY
EST. 1943

Los Alamos National Laboratory, an affirmative action/equal opportunity employer, is operated by the Los Alamos National Security, LLC for the National Nuclear Security Administration of the U.S. Department of Energy under contract DE-AC52-06NA25396. By acceptance of this article, the publisher recognizes that the U.S. Government retains a nonexclusive, royalty-free license to publish or reproduce the published form of this contribution, or to allow others to do so, for U.S. Government purposes. Los Alamos National Laboratory requests that the publisher identify this article as work performed under the auspices of the U.S. Department of Energy. Los Alamos National Laboratory strongly supports academic freedom and a researcher's right to publish; as an institution, however, the Laboratory does not endorse the viewpoint of a publication or guarantee its technical correctness.

Form 836 (7/06)

List of additional authors

Last	First	Middle	Organization
Karcz	Maciej		Indiana University
Liu	Chen-Yu		Indiana University
Long	Joshua	C.	Indiana University
Meyer	Hans-Otto		Indiana Univeristy
Reddy	Goverdhan		Indiana University

A study of liquid helium scintillation in the presence of an electric filed for the nEDM experiment

Takeyasu Ito, Steven Clayton, , Maciej Karcz, Chen-Yu Liu, Josh Long, Hans-Otto Meyer, John Ramsey, Goverdhan Reddy, and the rest of the nEDM collaboration

The nEDM collaboration

Abstract:
The nEDM experiment, currently being developed to be constructed at the Fundamental Neutron Physics Beamline at SNS at Oak Ridge National Laboratory, will search for the neutron electric dipole moment (EDM) with a sensitivity roughly two orders of magnitude better than the current limit. A nonzero EDM, if found, would be a clear signature of Physics beyond the Standard Model. In neutron EDM searches, the signature of a nonzero neutron EDM appears as a shift in the neutron spin precession frequency upon an application of an electric filed. In the nEDM experiment, the neutron spin precession frequency will be measured with respect to that of ^{3}He atoms, which will occupy the same volume as the neutrons as cohabiting magnetometer. Liquid helium scintillation light from spin dependent ^{3}He(n,p)t reaction will be used to determine the spin precession frequency difference between neutrons and ^{3}He atoms. However, little is known about the fast liquid helium scintillation as a function of electric field at the expected operating temperature. We performed a measurement of the liquid helium scintillation light yield dependence on the strength of the electric field up to ~ 45 kV/cm in the temperature range of 0.2K to 1.1 K. In this talk, the results of the measurements will be presented, along with their implication for the nEDM experiment.

A Study of Liquid Helium Scintillation in the Presence of an Electric Field for the nEDM Experiment

Takeyasu Ito, Steven Clayton, John Ramsey
Los Alamos National Laboratory

Maciej Karcz, Chen-Yu Liu, Josh Long, Hans-Otto Meyer, Goverdhan Reddy
Indiana University

for the nEDM Collaboration*

3rd APS-JPS Joint DNP Meeting
October 16, 2009
Waikoloa, HI

*The nEDM Collaboration: Arizona State University, Boston University, Brown University, California Institute of Technology, University of California-Berkeley, Duke University, University of Illinois-Urbana-Champagne, Indiana University-Bloomington, University of Kentucky, Los Alamos National Laboratory, Mississippi State University, North Carolina State University, Oak Ridge National Laboratory, Simon-Fraser University, University of Virginia, Yale University

nEDM Experiment at ORNL-SNS

Principle of the measurement

$$\nu = -[2\mu_n B \pm 2d_n E]/h$$

- Goal:
  - $\delta d_n = 10^{-28}$ e cm
- Selected features:
  - Superthermal production of UCN in the measurement cell
  - 3He comagnetometer
  - Use of LHe scintillation to detect neutrons spin precession

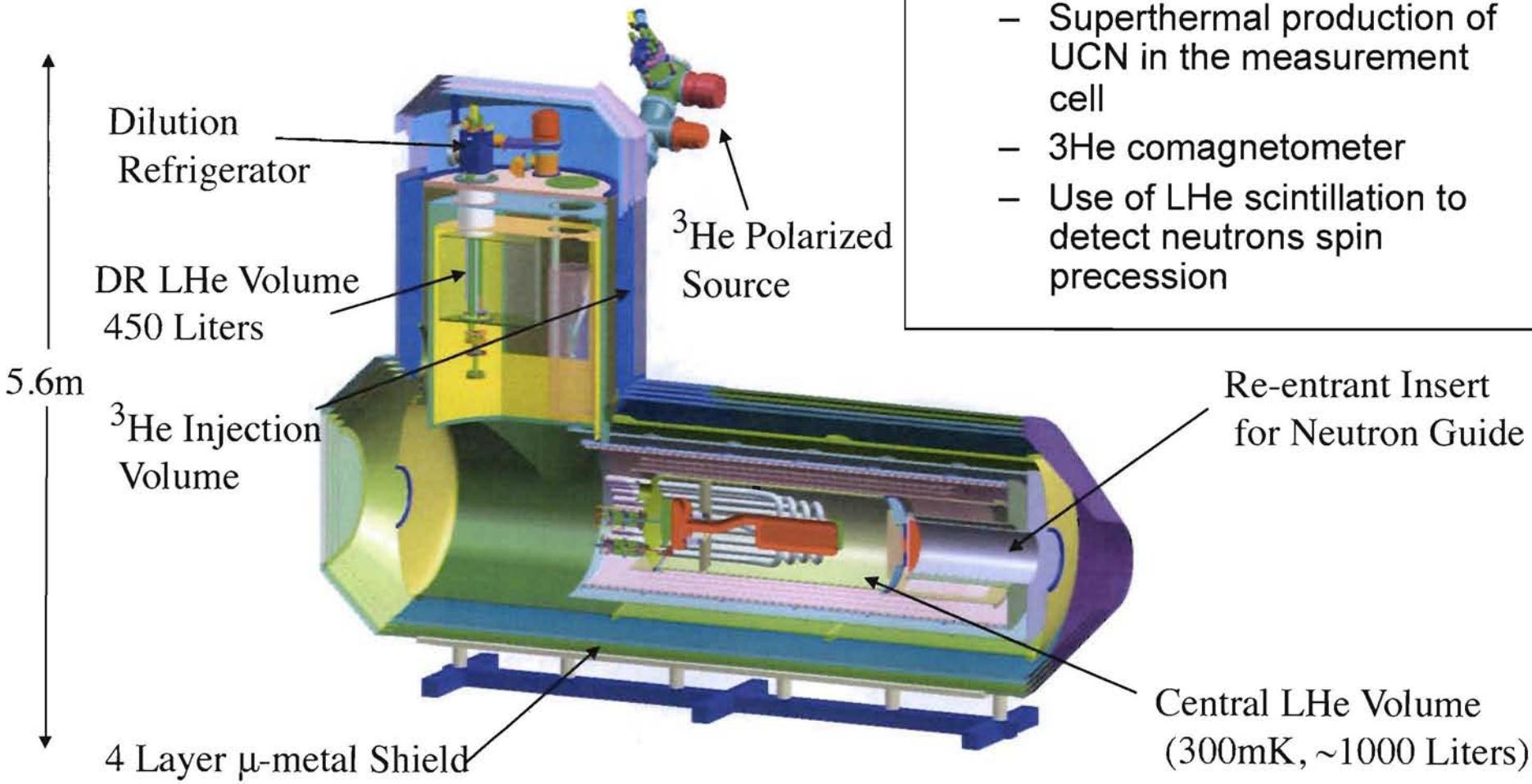

^{3}He as spin analyzer/ ^{4}He as a Detector

- ^{3}He-n reaction cross section

  $^3\vec{He} + \vec{n} \rightarrow t + p + 760$ keV σ(parallel) < 10^2 b

  σ (anti-parallel) ~ 10^4b

- ^{3}He-UCN reaction rate

$$1 - \vec{p}_3 \cdot \vec{p}_n = 1 - p_3 p_n \cos\left[(\gamma_n - \gamma_3)Bt\right] \qquad \left|\gamma_n - \gamma_3\right| = \left|\gamma_n\right| / 10$$

- Detect Scintillation light from the reaction products traveling in LHe
  - Convert EUV light to blue light using wavelength shifter
  - Detect the blue light with PMTs

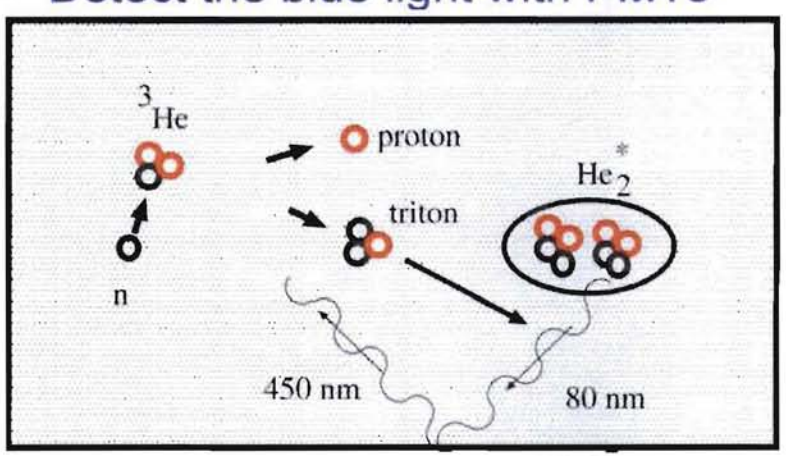

^{4}He superfluid filled measurement cell made of acrylic and coated with wavelength shifter

- Signature of EDM would appear as a shift in ω_3-ω_n corresponding to the reversal of ***E*** with respect to ***B*** with no change in ω_3

SF Liquid Helium Scintillation

Ionization track

$$\mathrm{He}^{+} + e \rightarrow \left(\mathrm{He}_3{}^{+}\right)_{snawball} + \left(e^{-}\right)_{bubble} \rightarrow \mathrm{He}_2{}^{*} + \mathrm{He}$$

- Singlet state: decays within ~ 1ns emitting a 80 nm photon (prompt scintillation)

$$\mathrm{He}_2\left(A^1\Sigma_u^+\right) \rightarrow \text{rad. decay}$$

- Triplet state: has a litefime of ~ 10 s in vacuum. Gives afterpulses through Penning ionization (destructive interaction with each other)

$$\mathrm{He}_2\left(a^3\Sigma_u^+\right) \rightarrow \mathrm{He}_2\left(A^1\Sigma_u^+\right) \rightarrow \text{rad. decay}$$

Afterpulse and particle ID

- Fast electrons

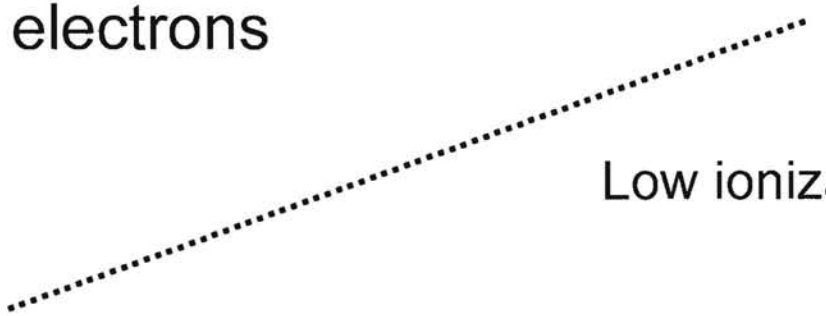

Low ionization density track

- α particles/protons and tritons from neutron capture on ^{3}He

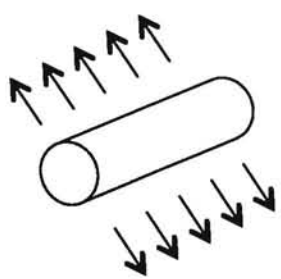

High ionization "column" or "cloud", which expands with time

Interaction among triplet states leads to afterpulses

D. N. McKinsey *et al.* Phys. Rev. A **67**, 062716 (2003)

Existing data on LHe scintillation in the presence of an electric field

Hereford and Moss, Phys Rev. **141**, 204 (1966).

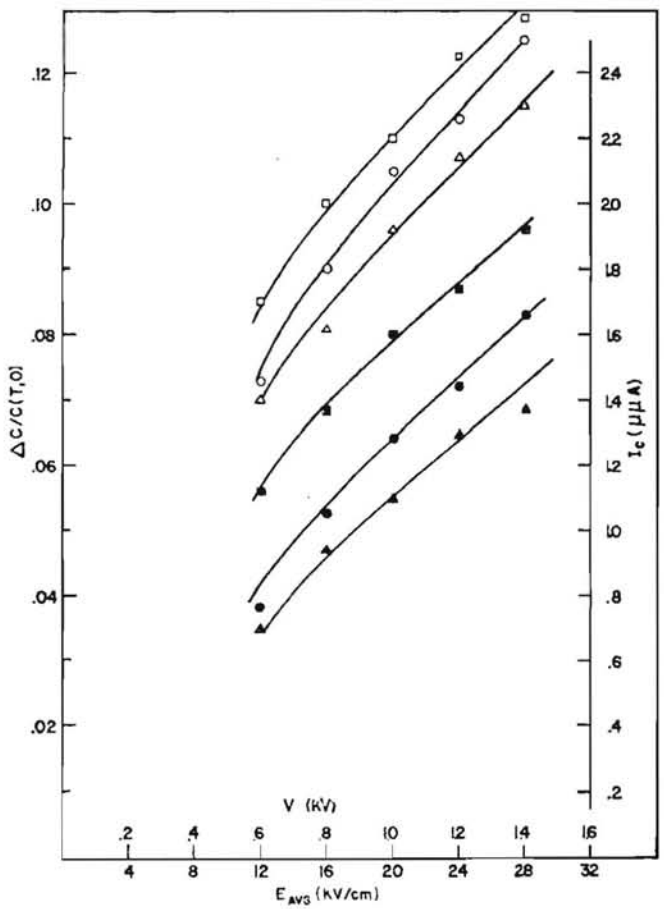

FIG. 3. The field-induced decrease in scintillation intensity (solid points, left scale) and the collected ion current (open points, right scale) versus applied voltage and estimated average field strength for 1.31°K (■,□), 2.17°K (▲,△), and 4.2°K (●,○).

- Ionization generated by α particles.
- Measurements made at 1.31, 2.17, 4.2 K with E field up to 30 kV/cm.
- Up to 12% reduction in the prompt pulse (1 μs) intensity observed.
- Po source on a thin wire.

$$E \propto 1/r$$

Goal of our experiment:
Study the dependence of the prompt scintillation yield on the strength of the electric field up to 40 kV/cm at 0.4 K with α particles.

Apparatus

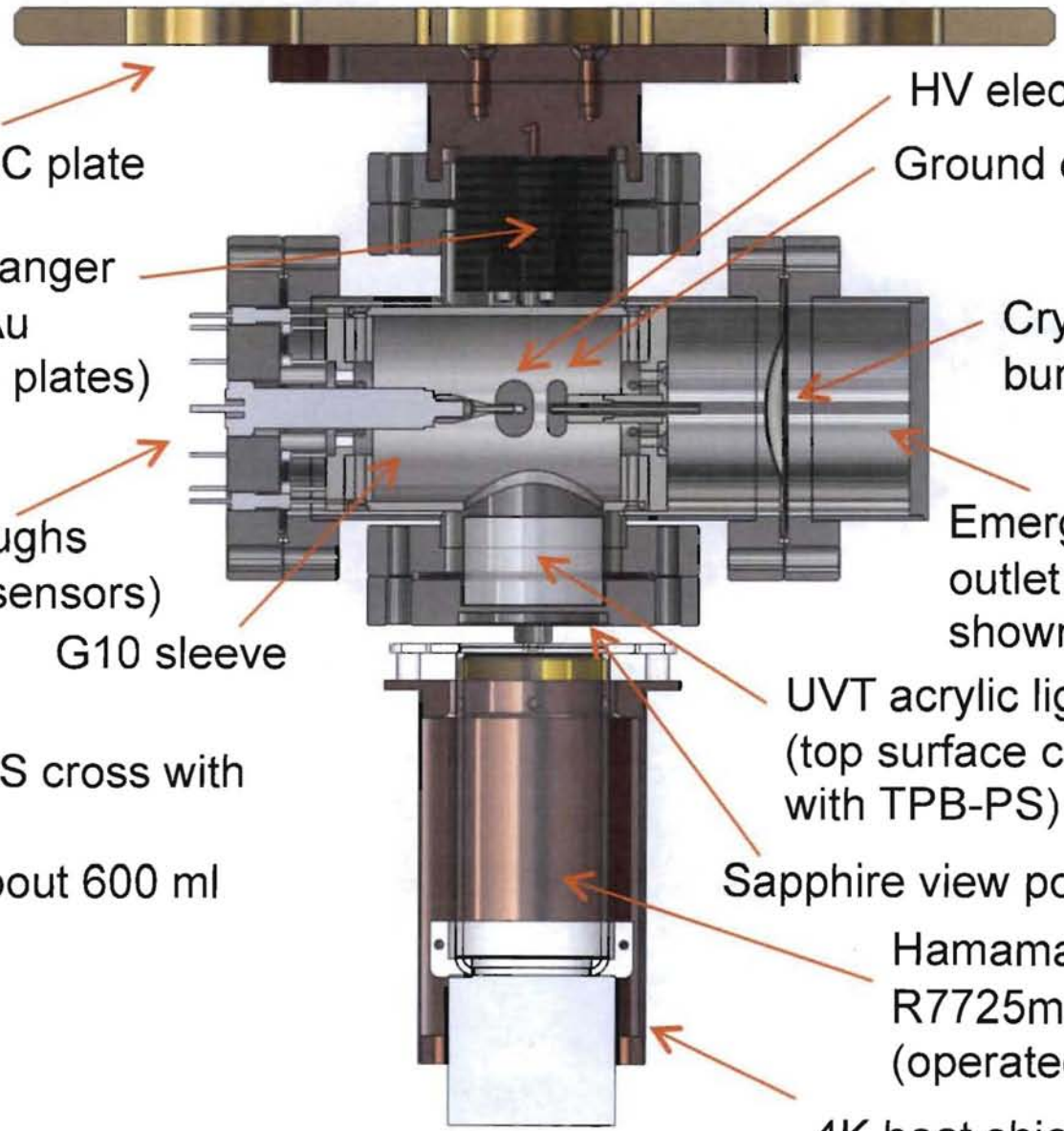

- Cell is made of SS cross with Conflat flanges
- LHe volume is about 600 ml

Apparatus

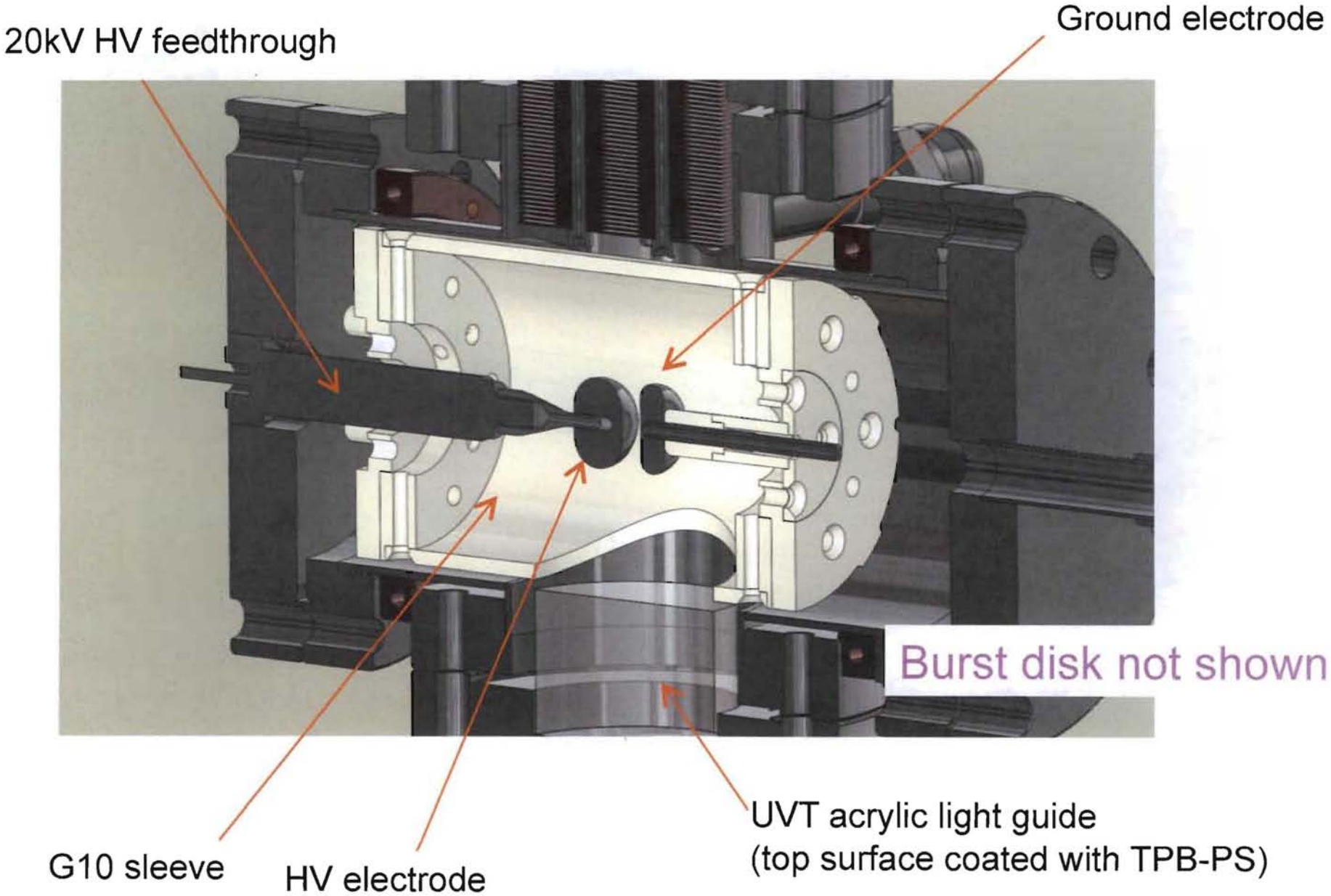
20kV HV feedthrough
Ground electrode
Burst disk not shown
G10 sleeve
HV electrode
UVT acrylic light guide
(top surface coated with TPB-PS)

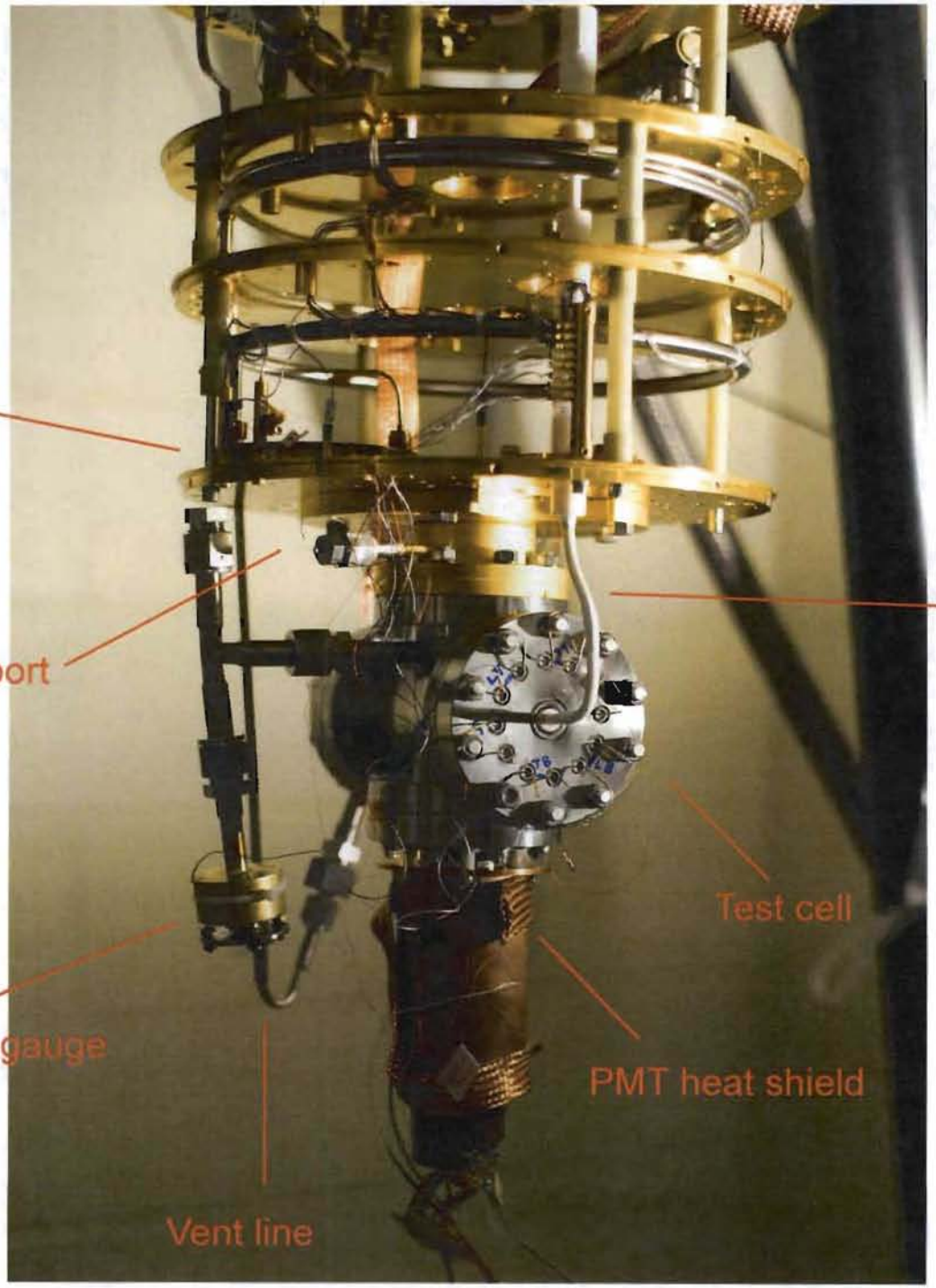
Mixing chamber
Fill port
Pressure gauge
Vent line
HV line
Test cell
PMT heat shield

Electrodes

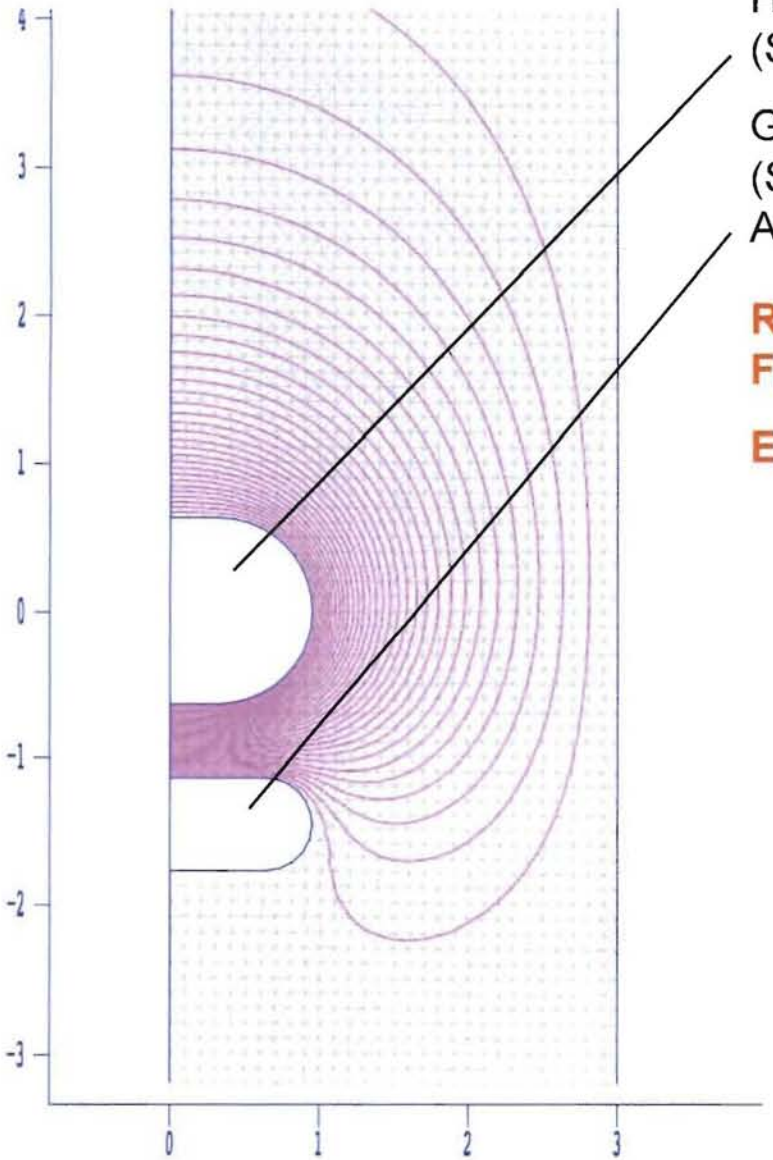

HV electrode
(Stainless steel, 0.75" diameter, 0.5" thick, R=0.25")

Ground electrode
(Stainless steel, 0.75" diameter, 0.25" thick, R=0.125",
Am-241 source is deposited in the center, 6mm diameter)

Range of 5.5 MeV α particles in SF LHe ~ 0.3 mm
Field is uniform to 5% at the location of the ionization

Electrode gap: 3.86 mm as built at RT
expected to be 3.58 mm at 0.4 K

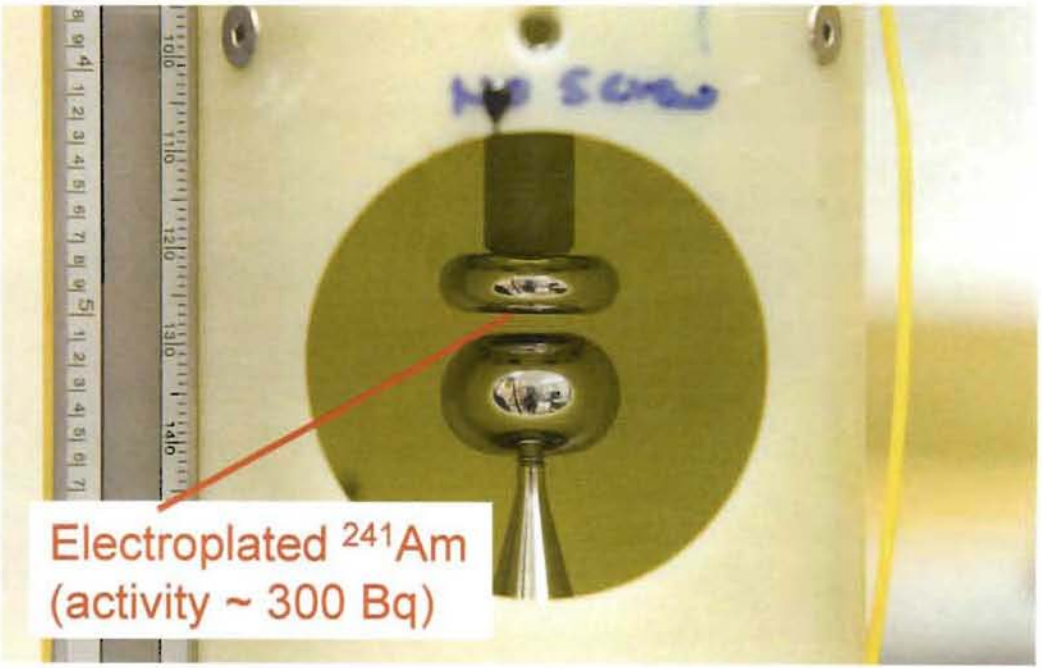

Data

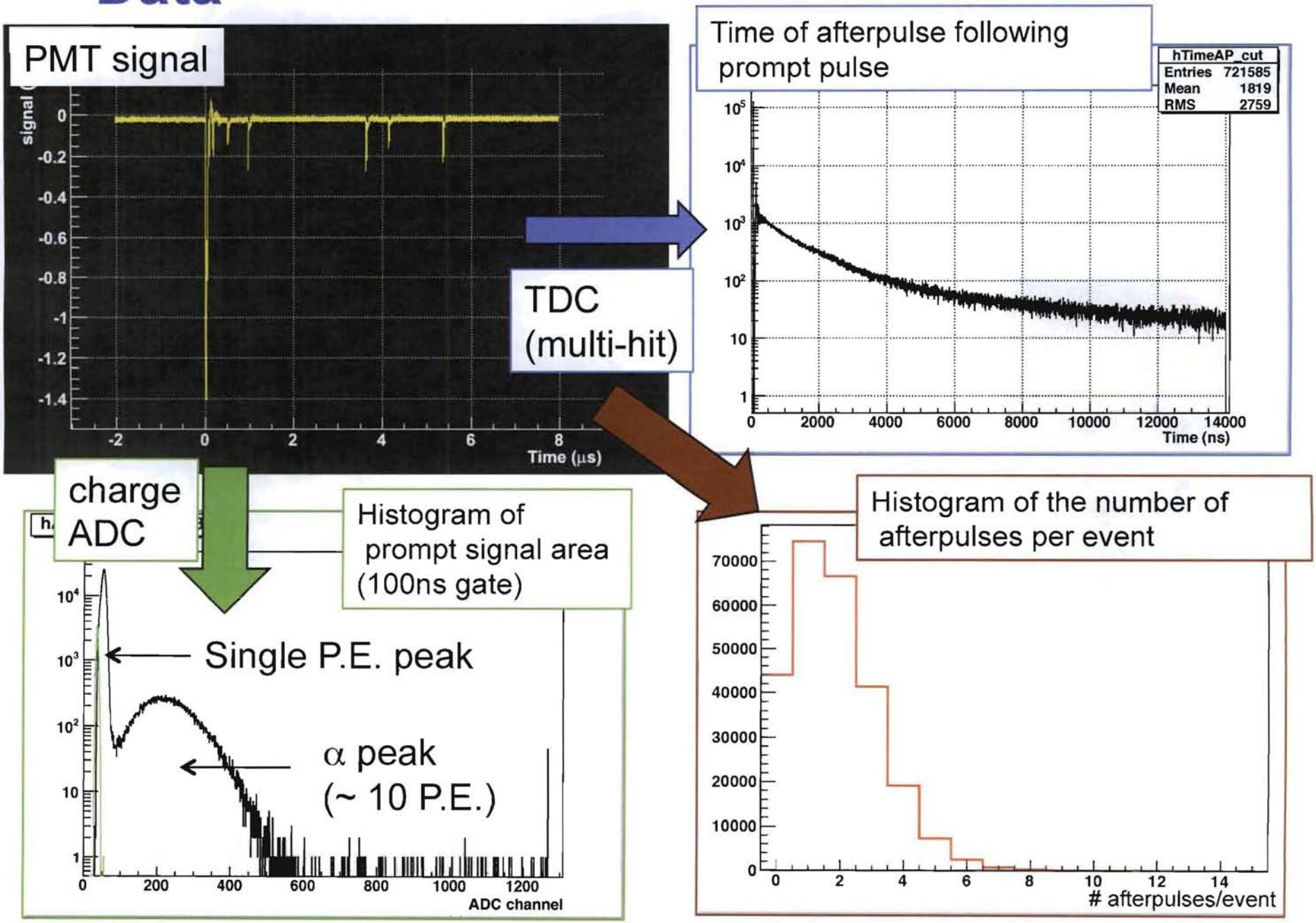
PMT signal
signal
Time (μs)
TDC
(multi-hit)
Time of afterpulse following
prompt pulse
hTimeAP_cut
Entries 721585
Mean 1819
RMS 2759
Time (ns)
charge
ADC
Histogram of
prompt signal area
(100ns gate)
Single P.E. peak
α peak
(~ 10 P.E.)
ADC channel
Histogram of the number of
afterpulses per event
afterpulses/event

Prompt pulse vs. temperature, HV=0

Number of prompt PE vs. temperature, HV=0

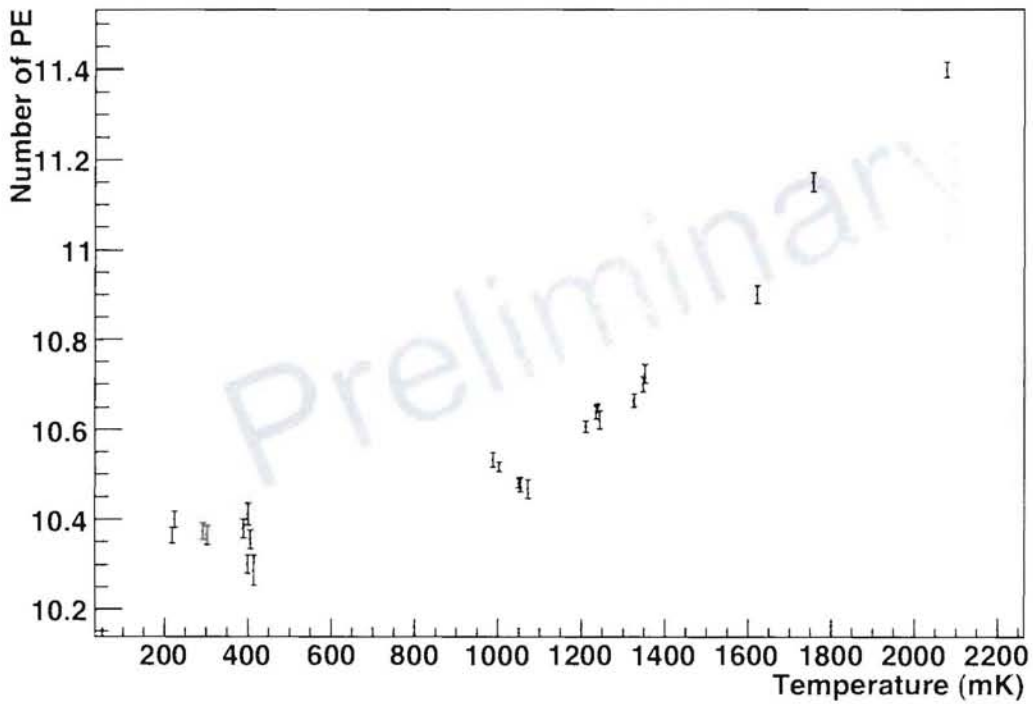

Roberts and Hereford, PRA7, p284.

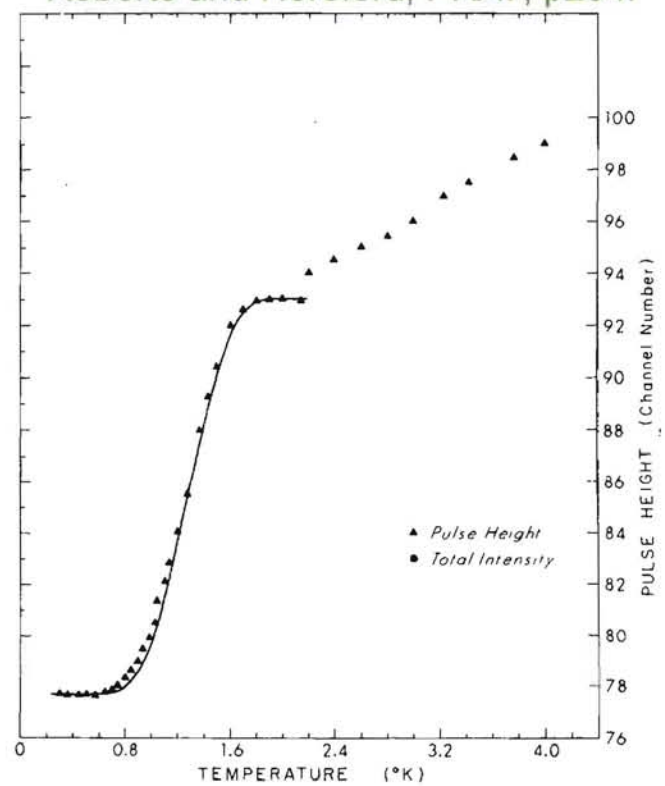

FIG. 2. Total luminescence intensity (left scale, circles) and the scintillation pulse intensity (right scale, triangles) vs temperature. Absolute values of the two curves cannot be compared. The solid curves were calculated as described in the text. The chamber radius was 0.47 cm.

Qualitative agreement is observed. Note that direct comparison is not applicable because of different integration time.

Number of prompt PE vs. high voltage

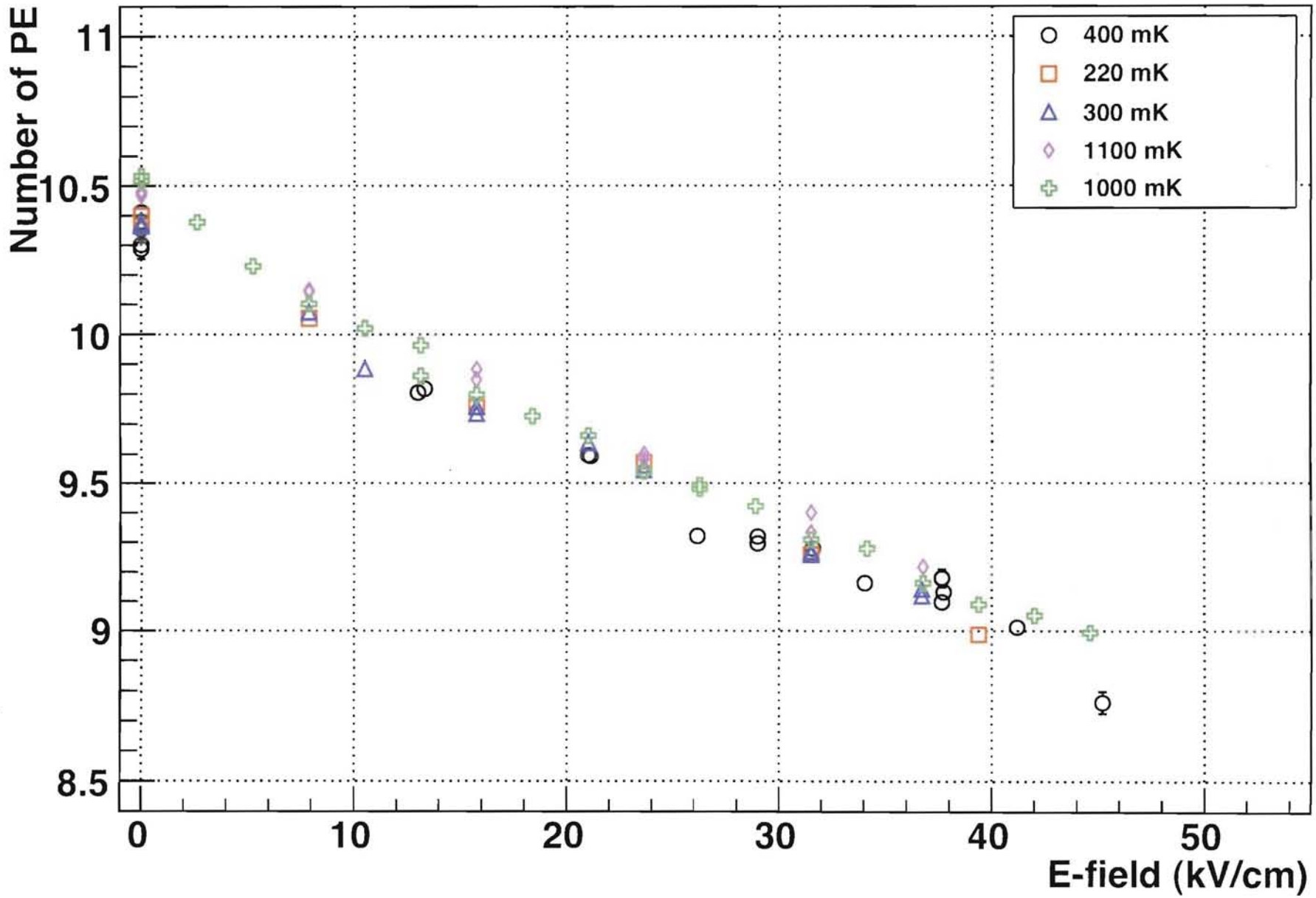

Afterpulse intensity vs temperature

Number of afterpulses within 14 μs vs. temperature, HV=0

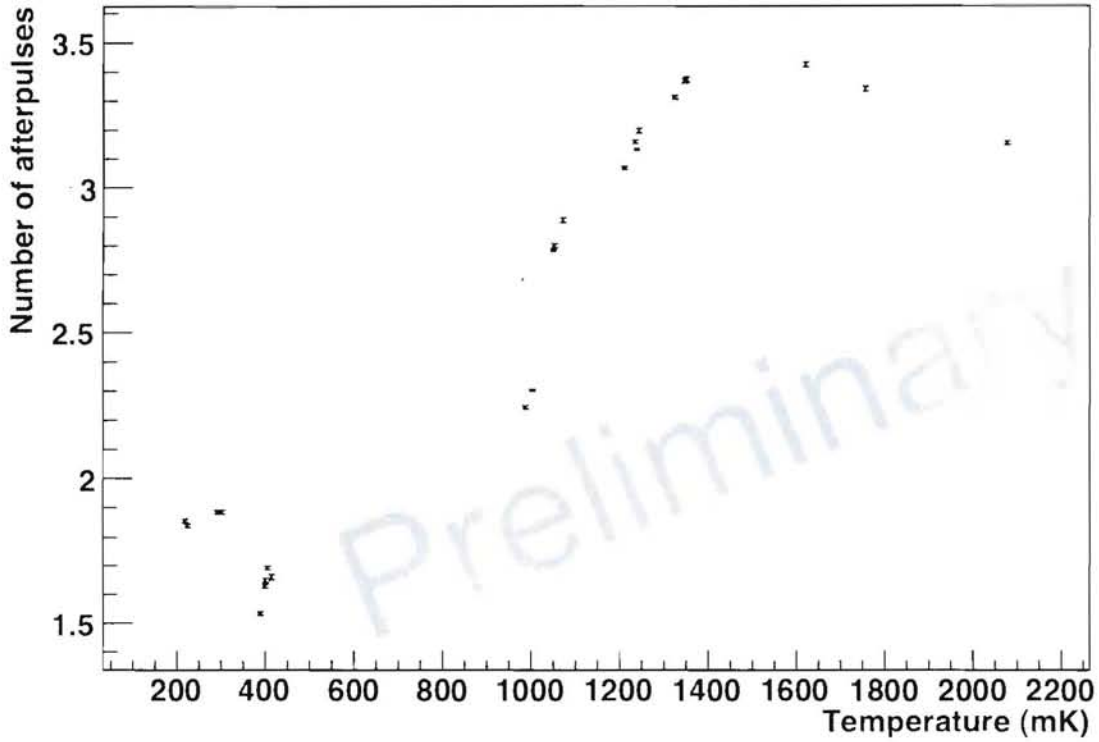

McKinsey et al., PRA 67, 062716 (2003)

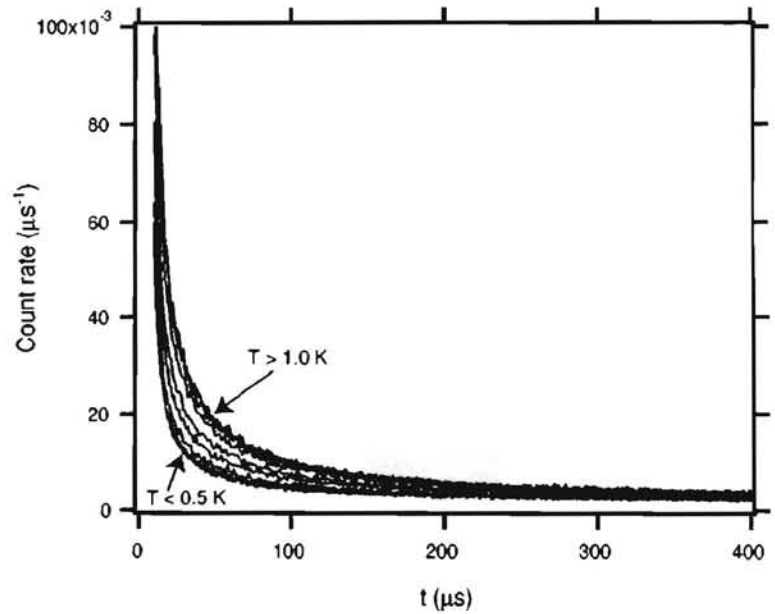

FIG. 8. Afterpulse intensity of an alpha source as a function of time. The curves shown correspond to different helium bath temperatures (220 mK, 360 mK, 500 mK, 670 mK, 780 mK, 830 mK, 880 mK, 960 mK, 1060 mK, and 1140 mK). The intensity of the afterpulsing increases as the temperature is raised from 500 mK to 960 mK.

A factor of ~ 2 reduction in afterpulse intensity at low temperatures

Afterpulse intensity vs. HV

Number of afterpulses within 14 μs vs. high voltage

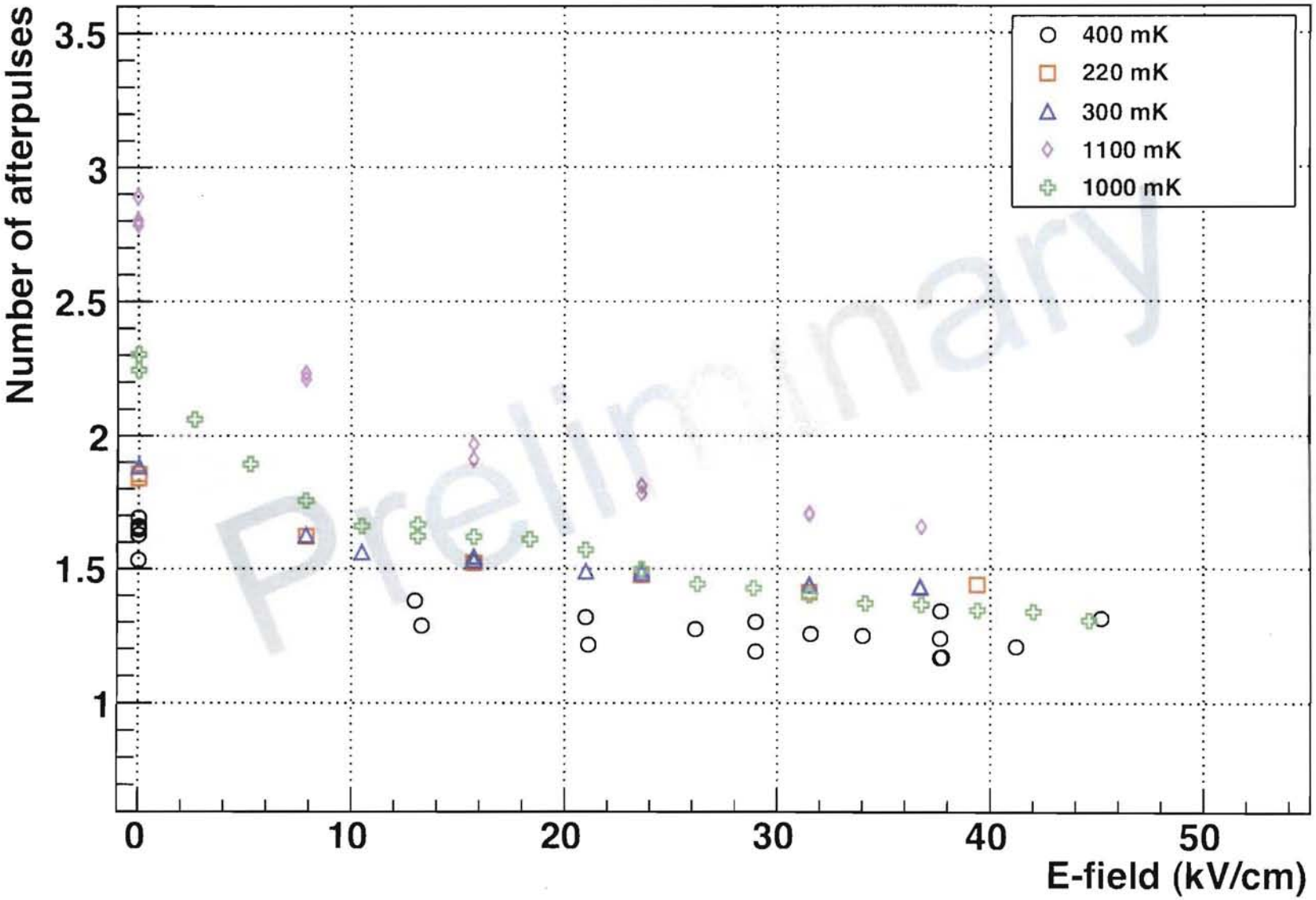

Afterpulse intensity normalized to prompt pulse

Number of afterpulses within 14 μs per prompt PE vs. high voltage

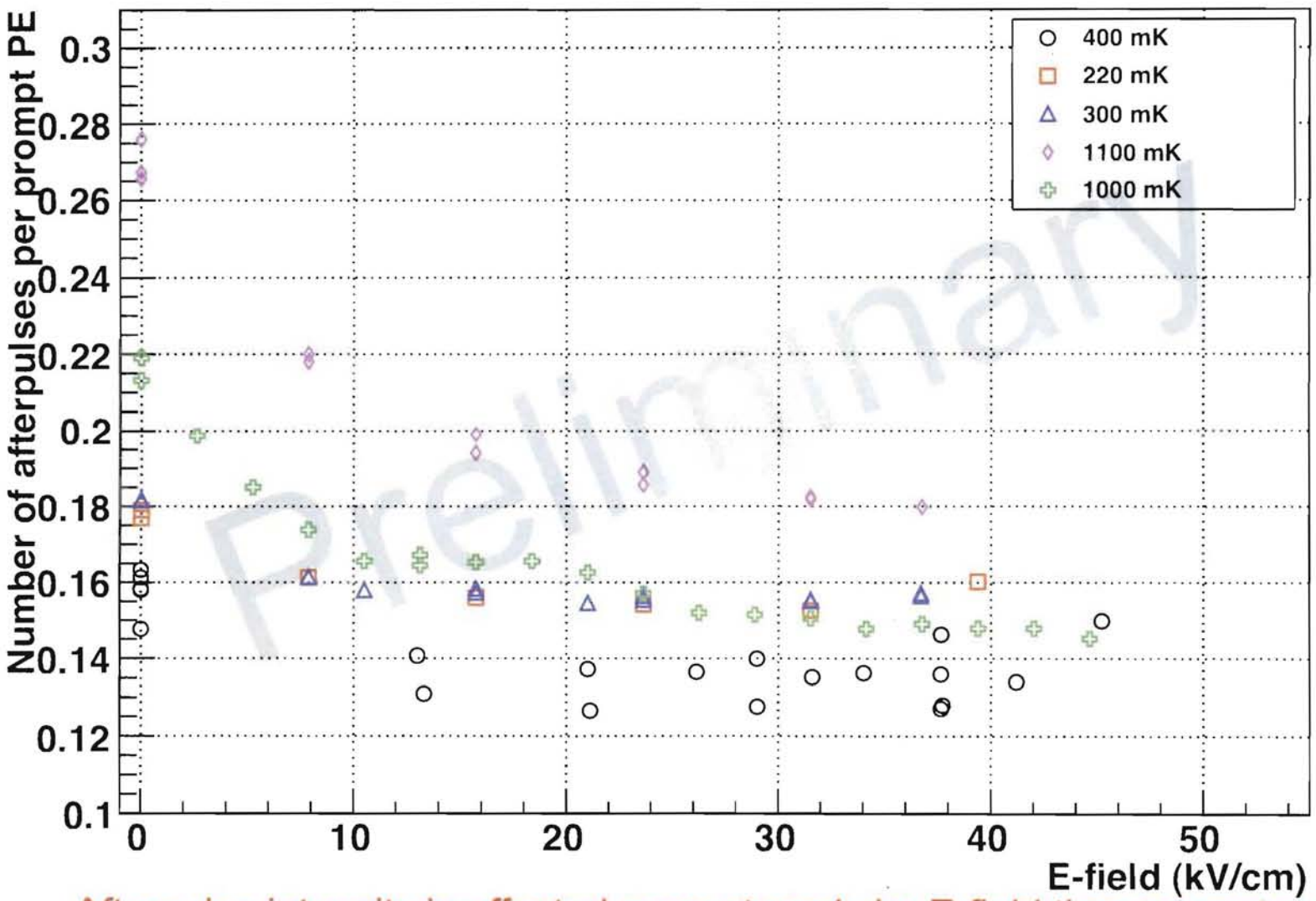

Afterpulse intensity is affected more strongly by E-field than prompt pulse.

Discussion

- Observed a 15 % reduction in the prompt scintillation yield at 45 kV/cm.
- The reduction is almost linear in E.
- Simple models do not produce the observed linear E dependence.
- The afterpulse intensity is more strongly affected by E-field. This is presumably due to extra recombination required for light emission.

Summary

- The prompt intensity reduction due to a ~ 50 kV/cm electric field is about 15%. Good news for nEDM.
- The afterpulse-based particle ID most likely not to work.
- Theoretical understanding of the data in progress.

Additional Slides

EDM Collaboration

- Arizona State University
- Boston University
- Brown University
- California Institute of Technology
- University of California, Berkeley
- Duke University
- University of Illinois, Urbana-Champagne
- Indiana University, Bloomington
- University of Kentucky
- Los Alamos National Laboratory
- Mississippi State University
- North Carolina State University
- Oak Ridge National Laboratory
- Simon-Fraser University
- University of Virginia
- Yale University

Flow Diagram

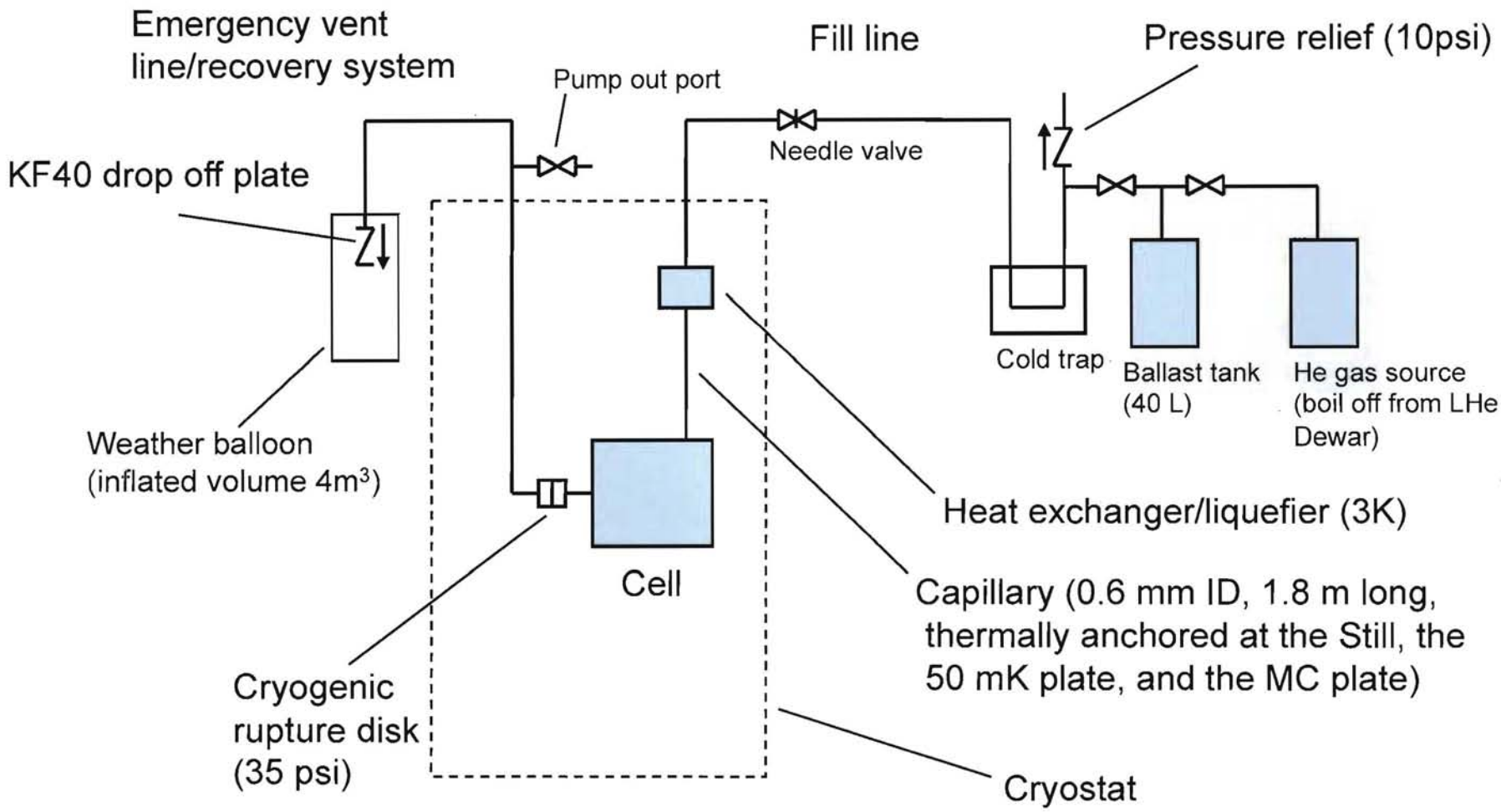

DAQ system

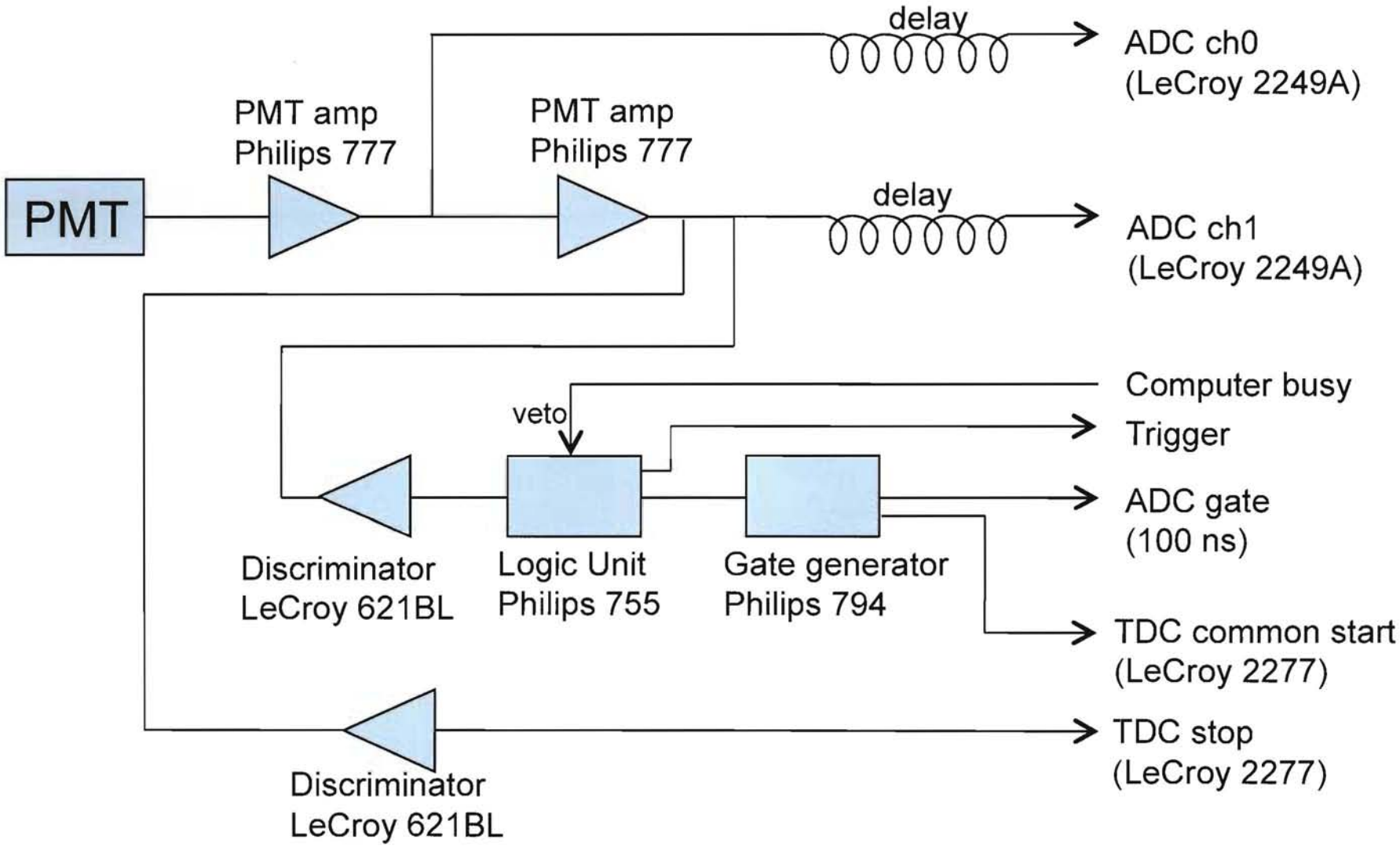

Note: LeCroy ADC 2249A: charge ADC
LeCroy TDC 2277: multi-hit long range TDC (up to 16 hits in 16 μs range)