LA-UR- 10-01420

Approved for public release; distribution is unlimited.

Title: Helium-3 comagnetometer readout for the nEDM experiment at SNS

Author(s): Steven M. Clayton

Intended for: 2010 APS April Meeting, Washington, D.C., Feb. 13, 2010

Los Alamos
NATIONAL LABORATORY
EST. 1943

Los Alamos National Laboratory, an affirmative action/equal opportunity employer, is operated by the Los Alamos National Security, LLC for the National Nuclear Security Administration of the U.S. Department of Energy under contract DE-AC52-06NA25396. By acceptance of this article, the publisher recognizes that the U.S. Government retains a nonexclusive, royalty-free license to publish or reproduce the published form of this contribution, or to allow others to do so, for U.S. Government purposes. Los Alamos National Laboratory requests that the publisher identify this article as work performed under the auspices of the U.S. Department of Energy. Los Alamos National Laboratory strongly supports academic freedom and a researcher's right to publish; as an institution, however, the Laboratory does not endorse the viewpoint of a publication or guarantee its technical correctness.

Form 836 (7/06)

^{3}He comagnetometer readout for the nEDM experiment at SNS

Steven Clayton

Los Alamos National Laboratory

Outline:
- nEDM@SNS measurement technique
- ^{3}He comagnetometer
- SQUID noise requirements
- Pickup loop sensitivity
- LANL SQUID test stand

2010 APS "April" meeting, Washington DC, February 13, 2010.

neutron EDM measurement

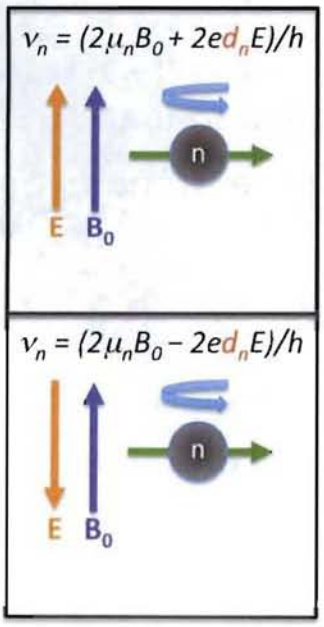

- ultracold neutrons (UCN) are produced and stored in superfluid ^{4}He
- non-zero d_n causes the precession frequency to be slightly different for **E** and **B** parallel vs. anti-parallel

neutron EDM measurement

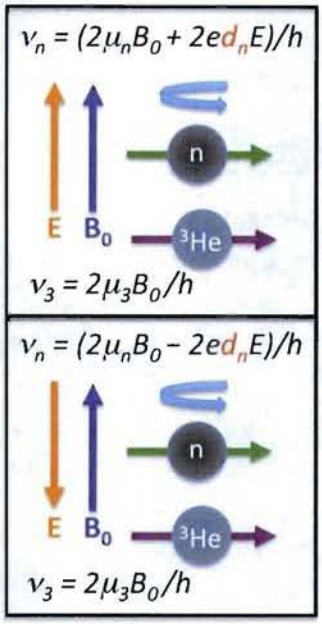

- ultracold neutrons (UCN) are produced and stored in superfluid ^{4}He
- non-zero d_n causes the precession frequency to be slightly different for **E** and **B** parallel vs. anti-parallel
- polarized ^{3}He in the measurement cell acts as the neutron spin analyzer and comagnetometer.

$n + {}^3He \rightarrow p + t + 764$ keV

^{3}He precesses ~10% faster than the n, and the capture cross-section is strongly total-spin dependent.

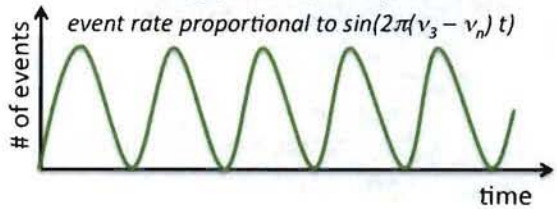

- Frequency shift due to d_n would show up in this signal
- systematic changes in B_0 also shift the frequency

Polarized ^{3}He comagnetometer

- LHe-filled cells are loaded with polarized ^{3}He
- Ultracold neutrons (UCN) are produced from cold neutrons by using the LHe as a superthermal source
- experimental optimization calls for ^{3}He concentration ~10^{-12}/cc and temperature 0.4 K
  - long mean-free-path in 0.4K ^{4}He
    - each ^{3}He samples B-field over entire cell volume
  - concentration low enough not to dominate UCN storage time
- The signal amplitude from such a dilute concentration of ^{3}He is ~6 fT outside the measurement cell
  - SQUID gradiometer is required to measure ^{3}He precession.

Large gradiometer

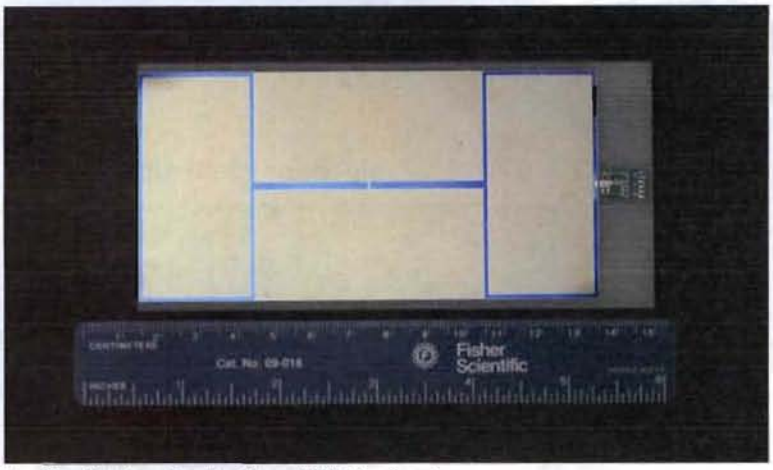

Extremely Sensitive, Very Long Baseline Planar SQUID Gradiometer

R. Cantor and J. A. Hall, STAR Cryoelectronics, Santa Fe, NM USA
A. N. Matlachov and P. L. Volegov, Los Alamos National Laboratory, Los Alamos, NM USA

We have developed an extremely sensitive, low-Tc first-order planar gradiometer with a very long baseline of 9 cm. The thin-film gradiometric pickup loop consists of two series-configured 3 cm x 6 cm pickup loops with center-to-center spacing of 9 cm fabricated on a 150 mm Si wafer. The pickup loop is connected to the input circuit of a separate dc SQUID chip using superconducting wire bonds. The measured magnetic field sensitivity of the gradiometer referred to one pickup loop is 0.105 nT/Φ_0, and the intrinsic noise of the dc SQUID coupled to the thin-film pickup loop typically is 3 $\mu\Phi_0$/Hz$^{1/2}$. This results in a magnetic field noise of 0.3 fT/Hz$^{1/2}$ and a magnetic field gradient noise of 0.033 fT/cm-Hz$^{1/2}$. Measurements were carried out in our magnetic shielded room.

Slide from talk by Savukov, "Magnetic shielding calculations," at Feb. 2008 nEDM meeting at ASU

SQUID noise requirements

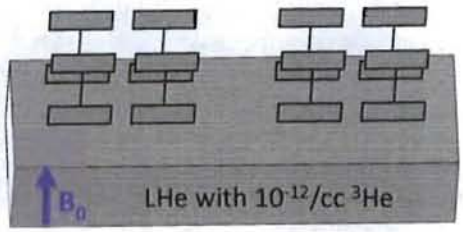

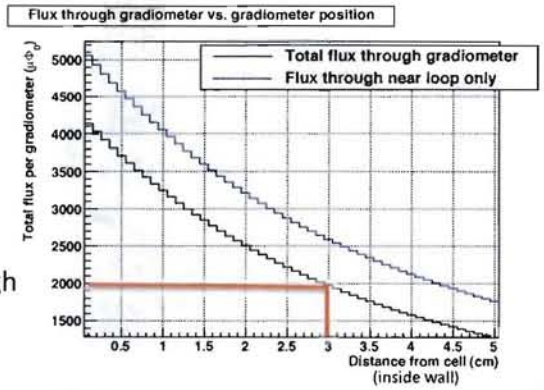

- We expect 2000 $\mu\Phi_0$ amplitude flux through each gradiometer at the ^{3}He precession frequency (10-100 Hz).
- The flux through each SQUID is $\Phi_s \sim 0.01\ \Phi_p = 20\ \mu\Phi_0$
- For the SQUID noise not to significantly degrade nEDM precision, we need $\delta f_3 \leq (26\mu\text{Hz})/3$, or a SQUID flux noise of

$$N^2 \leq (\delta f_3)^2 \Phi_S^2 \pi^2 T_m^3/3 = (4\ \mu\Phi_0/\sqrt{\text{Hz}})^2$$

(or ~0.5 fT/√Hz referred to gradiometer half)

- Summing over 8 gradiometers improves the situation if the noise/interference is uncorrelated.

$$\Phi_s = \frac{M}{I_i} = \frac{M\Phi_p}{L_p + L_i}$$

$$(\delta f_3)^2 = \left(\frac{N}{\Phi_s}\right)^2 \frac{3}{\pi^2 T_m^3}$$

based on Chibane et al., Meas. Sci. Technol. 6 (1995) 1671.

Relative pickup sensitivity vs. source position

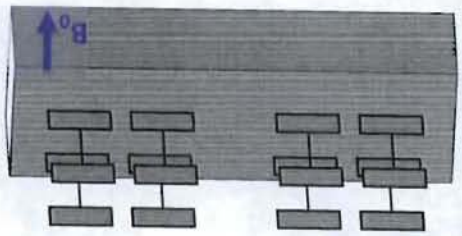

Projections of 3D plot

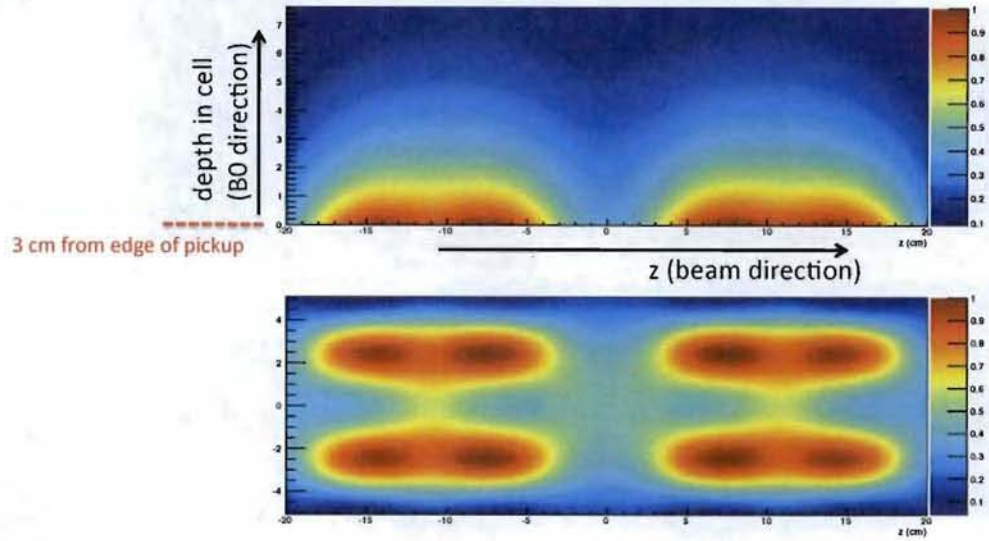

SQUID principles

A Josephson junction is a formed by two weakly coupled superconductors.
A superconducting quantum interference device comprises two Josephson junctions in parallel.

The dynamics of each Josephson junction are described by:

- 1st Josephson equation: $I_s = I_0 \sin\delta$

  phase difference between the macroscopic wave functions of the two superconducting electrodes

  supercurrent across junction

  maximum supercurrent (critical current)

- 2nd Josephson equation: $\frac{d\delta}{dt} = \frac{2e2\pi}{h}U = \frac{2\pi}{\Phi_0}U$

  voltage across junction

For U≠0, the current across the junction oscillates with the Josephson frequency:

$$\omega_J \equiv \frac{2\pi V}{\Phi_0} = 2\pi f_J \approx 2\pi V \times 483.6 \text{ MHz/}\mu\text{V}$$

Typical SQUID voltage swings of up to 50 μV correspond to intrinsic operating frequencies of up to ~25 GHz.

SQUIQs can see electromagnetic interference over very broad band!

Low-noise SQUID operation for ^{3}He precession readout

- demonstrated by LANL magnetometry group
  - I. Savukov et al., Journal of Magnetic Resonance 195 (2008) 129–133
    - extrapolated to nEDM conditions, $\delta f_3 \sim 3.4\ \mu$Hz per 500 s measurement (need $\delta f_3 < 26\ \mu$Hz for nEDM)

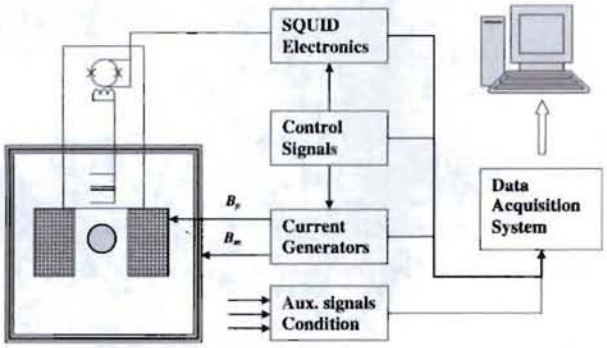

- What about practical implementation into much larger, more complicated, less ideal nEDM apparatus?
  - apply lessons of LANL magnetometry group:
    - e.g., no conductors may penetrate Faraday cage: battery power all electronics, use optical readout
  - test electronics within Faraday cage for SQUID compatibility.

nEDM cryostat

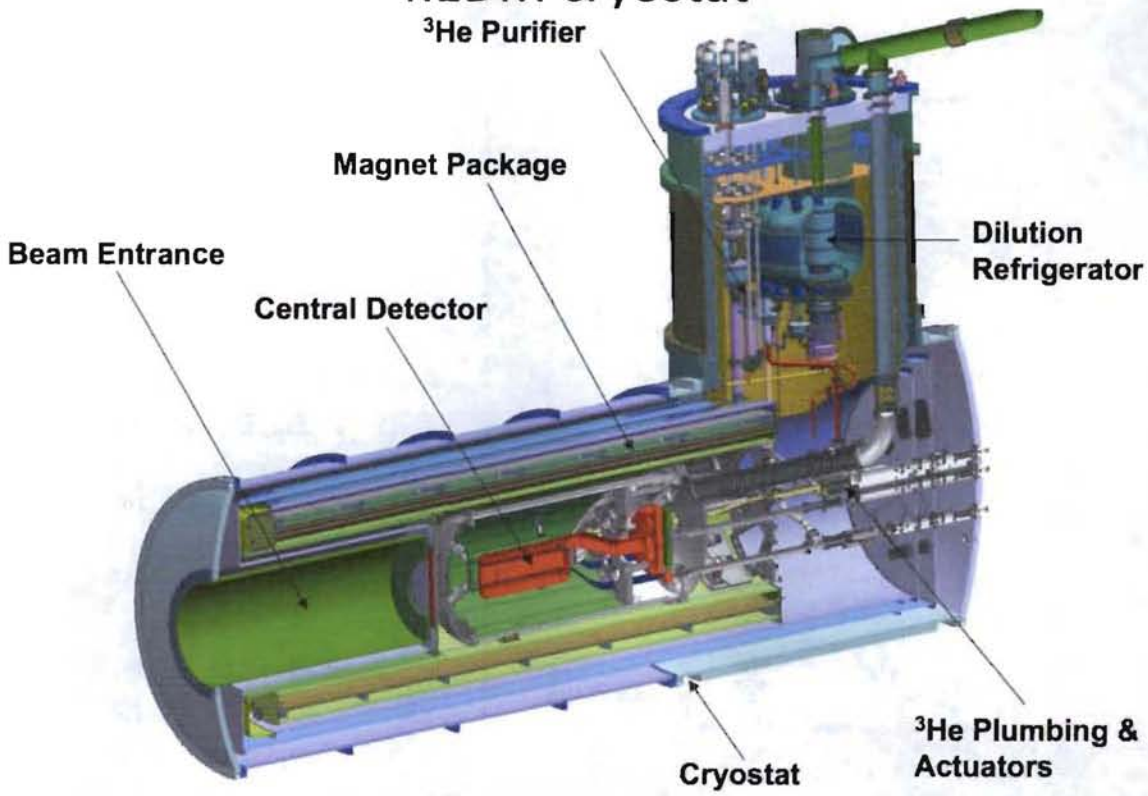

Electronics Block Diagram

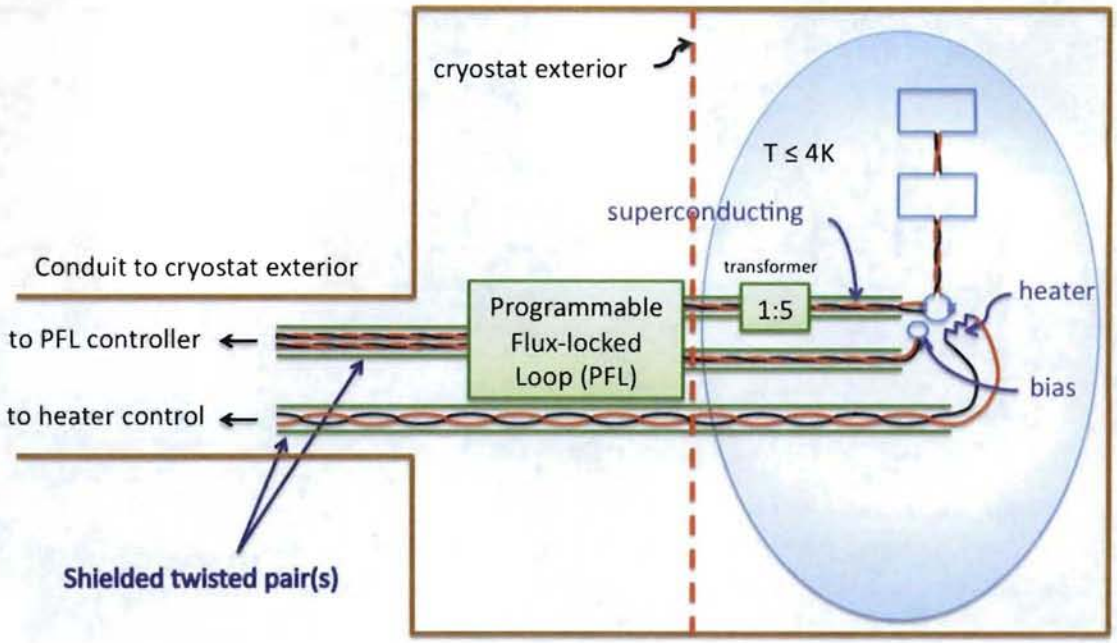

Electronics Block Diagram

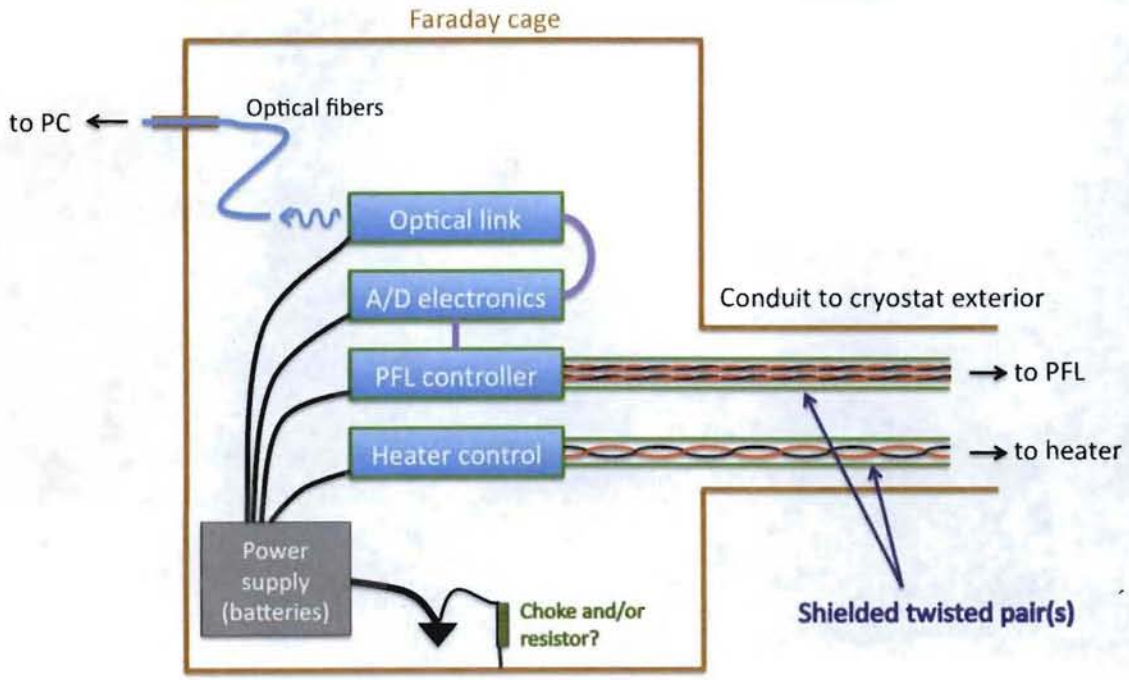

LANL nEDM SQUID test apparatus

- under construction

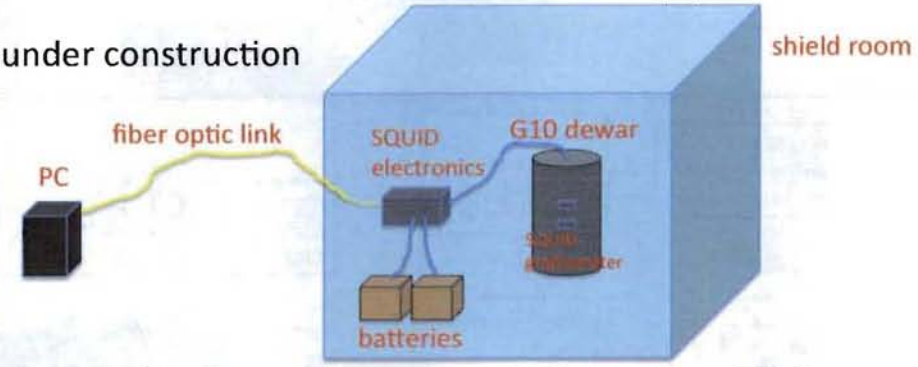

- designed to test configurations similar to the nEDM apparatus
  - will test electronics for compatibility with SQUIDs, e.g., temperature monitors, photomultiplier tubes.
  - will test long leads between pickup loop/SQUID/room-temperature electronics
- could be configured to test materials for ferromagnetic impurities

SQUIDs mounted and bottom shield

Electronics/DAQ for first cooldown

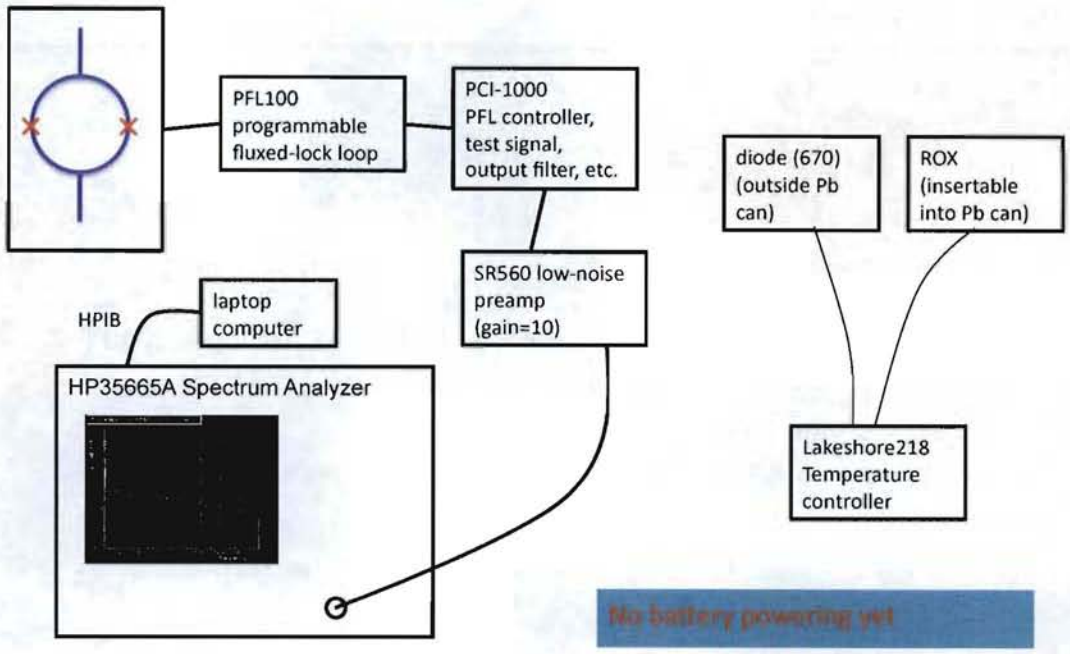

SQUID gradiometer noise spectrum

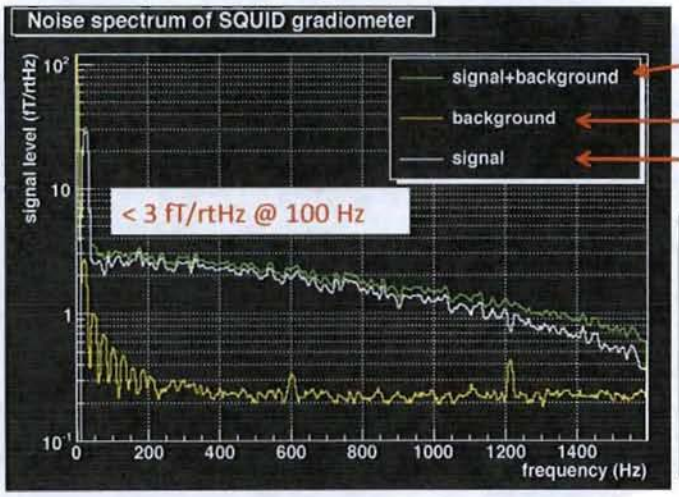

SQUID signal into analyzer

unplugged, analyzer input terminated

background-subtracted

Parameters:
- small gradiometer w/square coils (see Cantor et al., IEEE TRANSACTIONS ON APPLIED SUPERCONDUCTIVITY, VOL. 17, NO. 2, JUNE 2007)
- 0.6 fT/Φ_0 (from Cantor et al. paper)
- 1.90 V/Φ_0 (measured in SQUID tuning)
- SR460 preamp gain = 10
- 10 kHz filter on PCI-1000 output

- 2-3 times the nEDM noise requirement without trying too hard
  - -- no Faraday cage around electronics
  - -- facility-powered equipment (no batteries)
- but,
  - -- further noise improvement may be difficult
  - -- setup was very far from nEDM configuration

nEDM collaboration

R. Alarcon, S. Balascuta, L. Baron-Palos
Arizona State University, Tempe, AZ, USA
D. Budker, B. Park
University of California at Berkeley, Berkeley, CA 94720, USA
G. Seidel
Brown University, Providence, RI 02912, USA
E. Hazen, A. Kolarkar, V. Logashenko, J. Miller, L. Roberts
Boston University, Boston, MA 02215, USA
A. Perez-Galvan, J. Boissevain, R. Carr, B. Filippone, M. Mendenhall, R. Schmid
California Institute of Technology, Pasadena, CA 91125, USA
M. Ahmed, M. Busch, W. Chen, H. Gao, X. Qian, Q. Ye, W.Z. Zheng, X. F. Zhu, X. Zong
Duke University, Durham NC 27708, USA
F. Mezei
Hahn-Meitner Institut, D-14109 Berlin, Germany
C.-Y. Liu, J. Long, H.-O. Meyer, M. Snow
Indiana University, Bloomington, IN 47405, USA
L. Bartoszek, D. Beck, P. Chu, C. Daurer, A. Esler, J.-C. Peng, S. Williamson, J. Yoder
University of Illinois, Urbana-Champaign, IL 61801, USA
C. Crawford, T. Gorringe, W. Korsch, B. Plaster, H. Yan
University of Kentucky, Lexington KY 40506, USA
E. Beise, H. Breuer, T. Langford
University of Maryland, College Park, MD 20742, USA
P. Barnes, S. Clayton, M. Cooper, M. Espy, R. Hennings-Yeomans, T. Ito, M. Makela, A. Matlachov, E. Olivas, J. Ramsey, I. Savukov, W. Sondheim, S. Tajima, J. Torgerson, P. Volegov, S. Wilburn
Los Alamos National Laboratory, Los Alamos, NM 87545, USA
K. Dow, D. Hassel, E. Ihloff, J. Kelsey, R. Milner, R. Redwine, J. Steele, E. Tsentalovich, C. Vidal
Massachusetts Institute of Technology, Cambridge, MA 02139, USA
J. Dunne, D. Dutta, E. Leggett
Mississippi State University, Starkville, MS 39762, USA
F. Dubose, R. Golub, C. Gould, D. Haase, P. Huffman, E. Korobkina, C. Swank, A. Young
North Carolina State University, Raleigh, NC 27695, USA
R. Allen, V. Cianciolo, S. Penttila
Oak Ridge National Laboratory, Oak Ridge, TN 37831, USA
M. Hayden
Simon-Fraser University, Burnaby, BC, Canada V5A 1S6
N. Fomin, G. Greene
The University of Tennessee, Knoxville, TN 37996, USA
S. Stanislaus
Valparaiso University, Valparaiso, IN 46383, USA
S. Baessler
University of Virgina, Charlottesville, VA 22902, USA
S. Lamoreaux, D. McKinsey, A. Sushkov
Yale University, New Haven, CT 06520, USA