LA-UR- 10-02789

Approved for public release; distribution is unlimited.

Title: An Electron Spin Reversal in Optically-Pumped Rubidium

Author(s): E.B.Norrgard, D.Tupa, J.M.Dreiling, and T.J. Gay

Intended for: submission to Physical Review A

Los Alamos
NATIONAL LABORATORY
EST. 1943

Los Alamos National Laboratory, an affirmative action/equal opportunity employer, is operated by the Los Alamos National Security, LLC for the National Nuclear Security Administration of the U.S. Department of Energy under contract DE-AC52-06NA25396. By acceptance of this article, the publisher recognizes that the U.S. Government retains a nonexclusive, royalty-free license to publish or reproduce the published form of this contribution, or to allow others to do so, for U.S. Government purposes. Los Alamos National Laboratory requests that the publisher identify this article as work performed under the auspices of the U.S. Department of Energy. Los Alamos National Laboratory strongly supports academic freedom and a researcher's right to publish; as an institution, however, the Laboratory does not endorse the viewpoint of a publication or guarantee its technical correctness.

Form 836 (7/06)

An Electron Spin Reversal in Optically-Pumped Rubidium

E.B.Norrgard[1], D.Tupa[2], J.M.Dreiling[1], and T.J. Gay[1]

[1]Behlen Laboratory of Physics, University of Nebraska, Lincoln, NE 68588-0111
[2] Los Alamos National Laboratory, Los Alamos, NM 87545

(Received 16 April 2010)

Abstract: We have studied the optical pumping of mixtures of Rb vapor and N_2 buffer gas by laser light tuned to the D1 transition having a spectral width of ~ 500 MHz The Rb densities are of the order of 10^{13} cm^{-3}, while the buffer gas pressures range from 0.1 Torr to 10 Torr. As the frequency of the right-hand circularly-polarized laser is varied across the D1 absorption profile, the electron spin polarization of the Rb is found to take on negative values for small negative values of pump detuning from the absorption profile center. This occurs for N_2 pressures below ~ 1 Torr; at 10 Torr the electron spins consistently point in the same direction as the angular momentum of the pump light. The spin reversal effect can be understood in terms of populations of the F = 2 (^{85}Rb) and F = 1 (^{87}Rb) states caused by small unpolarized fractions in the pump beam, and its elimination in terms of pressure broadening caused by the N_2 buffer gas.

PACS Number: 32.80 Bx

Optical pumping of alkalis is an important tool in atomic physics. It is used in a broad range of experiments such as the storage of light [1], atomic clocks [2], the production of polarized ions [3], and the generation of polarized noble gases through spin-exchange optical pumping [4]. Although the fundamental techniques of these experiments are the same, they operate under very different conditions. Storage of light in a warm alkali vapor is effected with little or no buffer gas and with spectrally narrow, low-power lasers, while systems that use spin-exchange optical pumping to generate polarized noble gases tend to use high buffer gas pressures (~ 1000 Torr) and broad, high-power lasers. The work reported here deals with a third regime, using somewhat broad, high-power lasers with low pressures (~ 1 Torr) of buffer gas [5]. These conditions are necessary to generate a beam of electrons polarized through spin exchange with a spin-polarized optically-pumped alkali target [6]. The necessity of passing the electrons through the alkali (Rb) vapor requires that the buffer gas pressures be modest to maintain an appreciable electron current. We hope to use this technology to produce a "turnkey" polarized electron source.

In order to better understand our source performance, we undertook a systematic study to characterize the rubidium polarization under these conditions. Our experiments were conducted in a test cell with no electron beam present. We used a pumping laser with intermediate spectral width: ~500 MHz. The optical layout of our experiment is shown schematically in Fig.1. A ~10 W beam from a Coherent Verdi laser is used to pump a Spectra Physics 3900 Ti: Sapphire laser. The output of this laser is ~ 0.95 mm in diameter with a typical power of 800 mW. The beam passes through a clean-up linear polarizer and quarter-wave plate before entering a cell containing Rb vapor with a natural isotopic abundance. The cell also includes N_2 buffer gas at a pressure of 0.1, 1.0, or 10 Torr. A variable longitudinal magnetic field of up to 250 gauss is applied to the cell.

The absorption spectra of the probe beam in the room-temperature Rb reference cell (Rb number density $N_{Rb} \sim 10^{10}$ cm^{-3}) that contains no buffer gas is shown in Fig. 2a. This is used to provide a fiducial wavelength indicator for the probe detuning values in the pumping cell. The pumping frequency is determined within 0.5 GHz with a Burleigh WA-1000 wavemeter. In the reference cell absorption profile, the hyperfine structure of the Rb is apparent, with the widths of the individual absorption dips being determined primarily by Doppler broadening, with contributions from probe laser power broadening. In the test cell, the pressure broadening due to N_2 is 18 MHz/Torr [7]. Doppler widths in the test cell are ~550 MHz at all the temperatures we consider.

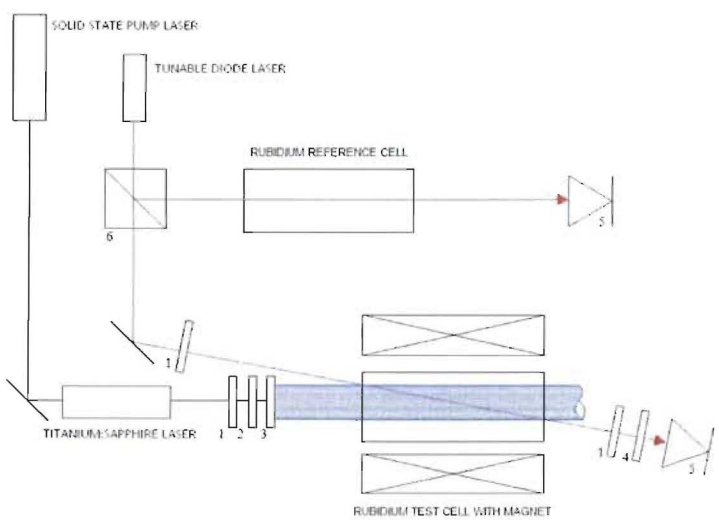

Fig. 1 Apparatus schematic. A titanium::sapphire laser produces an optical pumping beam at the D1 frequency of Rb. The beam is prepared with a clean-up linear polarizer (1) and a quarter-wave plate (2) before traversing a temperature-controlled test cell in magnetic field coils. A probe beam from a single-frequency diode laser is split so that part is used for frequency calibration in a reference cell and part passes through a linear polarizer, overlaps the optical pumping beam as it crosses the test cell, and has its resulting polarization measured with a linear polarizer and a photodiode (5).

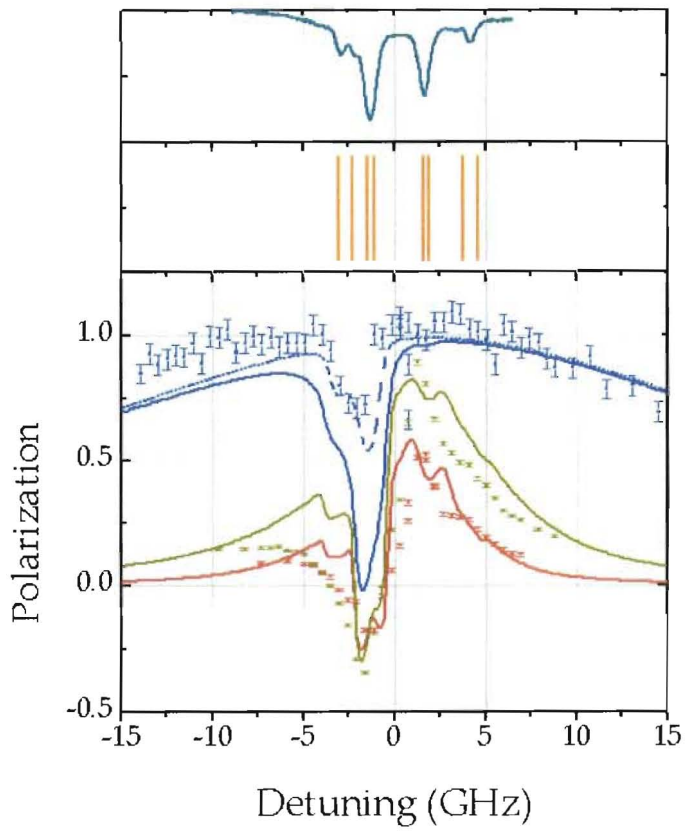

Fig. 2 A) An absorption scan by the probe laser serves as a fiducial for the frequency of the lasers relative to the Rb line center. The spacing of the two largest peaks is 3.0 GHz. B) Relevant transitions, from left to right: ^{87}Rb 2→1, ^{87}Rb 2→2, ^{85}Rb 3→2, ^{85}Rb 3→3, ^{85}Rb 2→2, ^{85}Rb 2→3, ^{87}Rb 1→1, ^{87}Rb 1→2 C) Measured (data points) and calculated (curves) polarization of a natural-abundance Rb vapor as a function of the optical pumping laser frequency. The three different curves and sets of data are for the same conditions with a 10 torr (blue), 1.0 torr (green), and 0.1 torr (red) N_2 buffer gas. As the background gas is reduced, a negative spin appears for small negative detunings of the pump laser. The blue dashed curve is the predicted polarization at 10 torr if the quarter-wave plate were inadvertently set to slightly different angle.

We observe significantly greater absorption widths in the test cell than the reference cell due to the high optical thickness of Rb in the former: $\sigma_o N_{Rb} L$ is typically near 700 with $N_{Rb} \sim 10^{13}$ cm^{-3}, the optical absorption at line center σ_o of 1.5x 10^{-11} cm^2, and the cell length L of about 5 cm. The value of N_{Rb} is typical for a Rb spin-filter [5]. The test cell absorption width is also enhanced significantly by the buffer gas pressure broadening in the wings.

The measurements of N_{Rb} and P_{Rb} were made by determining the angle ($\Delta\phi$) through which the linear polarization of the probe beam was rotated by the sample [5]. The probe beam detunings were kept sufficiently large (> 15 GHz) and its intensity sufficiently low (typically 20 μW) to avoid altering the Rb Zeeman sublevel populations caused by the pumping process. For probe detunings δ significantly larger than the hyperfine splitting of the D1 manifold, P_{Rb} (averaged for both isotopes and integrated over the path length of the probe beam in the cell, L) is given by

$$P_{Rb} = \frac{16\pi(\Delta\varphi)\delta}{N_{Rb} L \Gamma \lambda^2}, \qquad (1)$$

where Γ and λ are the natural linewidth and wavelength of the D1 transition, respectively, and P_{Rb} corresponds to the orientation of the Rb $5^2S_{1/2}$ fine-structure ground state:

$$P_{Rb} = \frac{n_{m_J=+\left(\frac{1}{2}\right)} - n_{m_J=-\left(\frac{1}{2}\right)}}{n_{m_J=+\left(\frac{1}{2}\right)} + n_{m_J=-\left(\frac{1}{2}\right)}}. \qquad (2)$$

This is in turn equivalent to the Rb electron polarization. Probe detunings were kept sufficiently large (> 15 GHz) that their value did not affect the resulting measurement of P_{Rb}.

We now consider the Rb polarization, P_{Rb}, as a function of detuning for the three buffer gas pressures of 0.1, 1.0, and 10 Torr. The averaged Rb polarization as a function of the pump detuning is shown in Fig. 2b. For 10 Torr N_2 pressure, P_{Rb} is positive at all pumping wavelengths. It remains appreciable even for the largest pump laser detunings, a result of the combined effects of pressure and power broadening. Residual hyperfine structure is present, but the excursion of P_{Rb} about its broad maximum is relatively small. All three curves display positive polarization for positive detunings and larger negative detunings, with a magnitude decreasing with increasing pressure, as expected from the correspondingly decreasing spin relaxation rate. As the N_2 pressure is decreased, however, pronounced structure appears, to the extent that the electron polarization actually flips sign for small negative detunings. This phenomenon has, to our knowledge, not been reported previously in optical pumping experiments. It corresponds to the counter-intuitive result that at certain frequencies, electrons in optically pumped s-states "spin the wrong way," i.e., anti-parallel to the angular momentum of the light that is producing their spin-polarization in the first place.

The spin reversal phenomenon we observe is due to the underlying hyperfine structure of the optically-pumped Rb vapor. This can be understood by considering the Zeeman structure of ^{85}Rb (Fig. 3). The optical pumping process by its nature tends to enhance states with the highest values of the total angular momentum Zeeman quantum number, m_F. With the absorption of right-handed circularly-polarized (σ^+) light, this yields positive

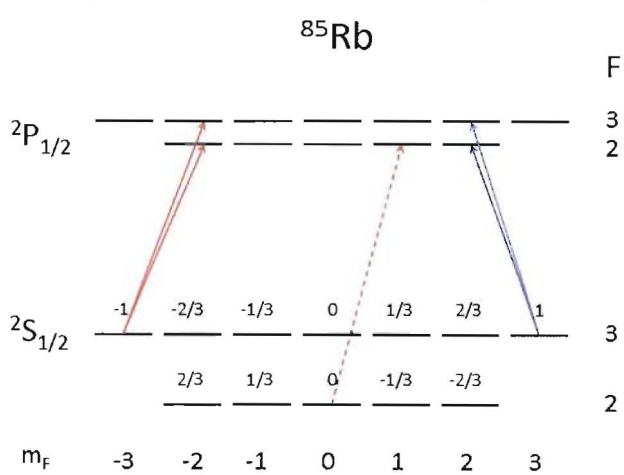

Fig. 3 Diagram of the 85Rb D1 line transitions.

values of the atomic polarization, i.e., the expectation value of m_F. However, when $|\vec{F}| < |\vec{I}+\vec{J}|$, the expectation value of the electron spin for a given $|F, m_F\rangle$ eigenstate of the hyperfine Hamiltonian is proportional to $-m_F$. Thus, for the example of ^{85}Rb, if one could selectively populate, e.g., the $^2S_{1/2}$ F = 2 ground state (Fig. 3) with a positive expectation value of m_F, the polarization of the hyperfine-averaged J-states of the atom would exhibit negative polarization which, in the case of a ^2S ground state, corresponds to negative electron polarization as well.

With some important but subtle issues, to be discussed below, this idea explains the qualitative structure of the P_{Rb} vs. detuning curves taken with low buffer gas pressure. In the vicinity of the ^{85}Rb F = 3 → F = (2,3) transitions at small negative detuning, σ^+ light transfers population from the F = 3 ground state to the F = 2 ground state while increasing m_F though absorption/emission cycles. This yields the observed negative electron polarization. At small positive detunings, where the F = 2 → F = (2,3) transitions are driven, the effect of absorption followed by emission is to populate exclusively the F = 3 ground state and increase m_F, which yields a positive polarization.

To achieve negative polarization by pumping the F = 3 → F = (2,3) transition, however, requires a π or σ^- component of the pump laser polarization that can drive vertical or left-going absorptions [8]. In the case of pure σ^+ light driving only F = 3 → F = (2,3) transitions, two problems occur. The F = 3, m_F = +3 dark state becomes sufficiently populated to drive the overall electron polarization positive. Moreover, once decay into the F = 2 state has occurred, there is no longer a pumping mechanism to shuttle its m_F population to the right. In the limit of small spin relaxation rate, we find that P_e in this simple case is -0.08 for atoms in the F = 2 state alone, but is +0.09 when atoms in the dark state are included. However, the population in the dark state can be eliminated by a very small component of π or σ^- light in the pump beam. Then P_{Rb}, due now exclusively to population in the F = 2 ground state, is about -0.17 (depending weakly on the component of the pump light that is not σ^+).

There are four time scales of interest in this system. One comes from the optical pumping rate, determined by the optical absorption cross section and the pump laser intensity. A second time scale comes from the rate at which the F=3, m_F=+3 state is emptied, which depends on the intensity of non-σ^+ polarization. Two time scales depend on the buffer pressure. The spin relaxation rate is inversely proportional to the buffer gas pressure (subject to a transition region from diffusion behavior to ideal gas behavior where the mean free path of the Rb atoms is comparable to the diameter of the laser beam). The rate of pumping from the F=2 state, which we will call the repump rate, is derived from an integral of the overlap of the pump laser at the F = 3 → F = 3

frequency with the pressure-broadened Lorentzian wings of the $F = 2 \rightarrow F = (2,3)$ transitions and roughly proportional to pressure. The optical pumping rate is much greater than all the other rates; it exceeds the spin relaxation rate under our modest buffer gas conditions and, like the dark state depletion rate and the repump rate, the optical pumping rate depends on the pump laser intensity but has a much higher constant of proportionality.

This spin-reversal phenomenon is seen at intensities of $\circledcirc$ or $\circledcirc^-$ light for which the laser-induced depopulation of the dark state is greater than the repump rate. If the repump rate exceeds the dark state depletion rate, the system tends to a positive polarization. With no buffer gas present for collisional broadening, a very small fraction of improper polarization – on the order of 10^{-4} - can produce the spin-reversal effect. Indeed, the extinction ratio of a standard polarizing beamsplitter shows it inadequate to prevent the spin-reversal. Another possible cause of the $\circledcirc$ or $\circledcirc^-$ component of the pump beam would be misalignment with the magnetic field or imperfect collimation; a mutual misalignment or a laser miscollimation of 1 degree is sufficient to cause the spin reversal we see.

The sign of the polarization depends on the sign of the difference of the repump rate and the dark state depletion rate. For our case where the spin relaxation rate is much less than the optical pumping rate, the magnitude of the polarization depends on the absolute value of this difference compared to the relaxation rate. For positive polarizations, the value of the polarization tends to +1.0, but the value does not reach -1.0 under spin-reversal conditions because the highest m_F state in the F=2 ground state level is not pure electron spin -1/2 and the pumping process for this level does not shuffle the atoms to higher m_F efficiently.

To explain the disappearance of the spin-flip as the N_2 pressure reaches 10 Torr, consider the case where the pump laser has a negative detuning of ~1.5 GHz, the optimal value for producing negative polarization. As the buffer gas pressure is increased, the laser becomes more and more effective at pumping the wings of the ground state $F = 2 \rightarrow F = (2,3)$ transitions. This pumps atoms out of the F = 2 ground state, with the effect of first diminishing and then flipping the sign of P_{Rb} at this frequency. Thus in our experiment, we are observing the transition from negligible buffer gas pressure, where a repump laser is required to empty the undesired ground-state hyperfine level, to buffer gas pressures where the hyperfine components of the ground state are sufficiently unresolved that a single laser is sufficient to obtain high electron polarization. This transition corresponds to the point where the buffer-pressure-dependent repump rate has exceeded the dark state depletion rate.

The intermediate data displays an interesting result of the trade-off in the rates associated with the system. At 1.0 Torr, the repump rate has increased, so from the argument above, the dip might be expected to get less pronounced. But the experimental conditions comprise a regime where the spin-relaxation rate is decreasing faster than the difference between the repump and dark state depletion rates, so the dip gets temporarily more negative.

We have modeled these effects in a calculation of the rate equations for the individual F, m_F ground- and excited-state sublevels for ^{85}Rb and ^{87}Rb, and solved the coupled rate equations for their steady-state solution. We make many assumptions to greatly simplify the calculations. The optically-induced transitions are calculated for a laser beam spatially flat in both radius and distance along the cell axis. The spectral profile of our laser displays three laser cavity modes equally spaced ~200 MHz apart; we approximate this with a spectrally flat beam of width 550MHz, which is also the Doppler linewidth of Rb at our experimental temperatures. The laser polarization is taken to be σ^+ with an adjustable parameter to describe the fraction of σ^- polarized light. It is essential to describe the optical absorption with a Voigt profile convolution of the Doppler-broadened Gaussian lineshape with the natural (6MHz width) and collisional (18GHz/torr width) Lorentzian lineshape. We neglect individual velocity subgroups and depict each atom with this idealized lineshape. The laser-induced pump-, dark state depletion-, and repump-rates are obtained with by integrating the overlap of the laser spectral profile with the absorption lineshape for the relevant transitions. The spin relaxation rate is given by the diffusion rate for atoms to cross the laser beam in the presence of N_2 gas joined smoothly to the beam-crossing rate for atoms in vacuum when the diffusion mean free path matches the beam diameter. The laser intensity, diameter, and the fraction of σ^--polarized light are the only free parameters in the calculations. Since spin-exchange collisions are not important in this regime, the rate equations for ^{87}Rb and ^{85}Rb are solved independently and their results combined in a weighted average to give the predicted polarization for the sample.

The predictions of the model are depicted as the solid-line curves in Fig 2b with the fit parameters of laser power = 100mW, the radius 0.5mm, and the fraction of σ^- polarized light 0.005. The model gives reasonable agreement in the overall shape of the data, depicting the appearance of the negative polarization at the low 0.1 torr buffer pressure, the deepening of the dip at the intermediate pressure, and the ultimate decrease of the dip at 10 torr pressure. It also gives good agreement in the heights of the positive excursions and the shapes of the wings. The dashed-line curve shows the results for 10 torr with the fraction of σ^- polarized light 0.0005. This adjustment to match the data corresponds to a change in the setting of the quarter waveplate by a fraction of a degree. With such tiny changes affecting the results, we attribute our

overall consistency to the fact that we do not set our waveplate by the readout of its angular setting, we rotate the waveplate to optimize the polarization signal from our probe beam. However, as the data sets were taken on different days; it may be possible that the waveplate had been set differently for the 10 torr data set or had experienced a small rotation around the vertical axis, which would yield different polarizations at the respective optimal settings.

As an aside, we note that a repump mechanism could, in principle, result from spin-exchange collisions between Rb atoms [4]. This method of redistributing atoms between the ground state F levels is not so relevant under conditions for a polarized electron source because the Rb number densities for which spin-exchange collisions become a factor is above that for which radiation trapping limits the polarization [9] and a quench gas cannot be used in sufficient quantity to mitigate the trapping.

In conclusion, we have presented data sets for rubidium polarization as a function of alkali density and buffer gas pressure. We report an interesting phenomenon apparently unreported to date in optical pumping experiments: the production of electron spin polarization in an alkali metal vapor oriented antiparallel to the spin of the pump light.

The authors gratefully acknowledge useful discussions with Mike Romalis. This work was supported by NSF Grant PHY-08XXXXX. This work is unclassified: Los Alamos Unlimited Release LA-UR# XXXXX.

References

[1] D. F. Phillips, A. Fleischhauer, A. Mair, R. L. Walsworth, and M. Lukin, Phys. Rev. Lett. **86**, 783 (2001).
[2] Y.-Y. Jau, A. B. Post, N. N. Kuzma, A. M. Braun, M. V. Romalis, W. Happer, Phy. Rev. Lett. **92,** 110801 (2004).
[3] L.W. Anderson, Nucl. Instrum. Methods **167**, 363 (1979).
[4] Thad G. Walker and William Happer, Rev. Mod. Phys. **69**, 629 (1997).
[5] M. A. Rosenberry, J. P. Reyes, D. Tupa, and T. J. Gay, Phys. Rev. A **75**, 023401 (2007).
[6] H. Batelaan, A. S. Green, B. A. Hitt, and T. J. Gay, Phys. Rev. Lett. **82**, 4216 (1999).
[7] Shang-yi Ch'en and Makoto Takeo, Rev. Mod. Phys. **29**, 20 (1957).
[8] Mike Romalis, of Princeton University, made us aware of the importance of a linear polarization fraction in the pump beam for the production of negative polarization.
[9] D. Tupa, L. W. Anderson, D. L. Huber, and J. E. Lawler, Phys. Rev. A **33**, 1045 (1986).