LA-UR-77-2400

TITLE: A PULSED SYSTEM FOR OBTAINING MICRODOSIMETRIC DATA WITH HIGH INTENSITY BEAMS

MASTER

CONF-771023--18

AUTHOR(S): M. Zaider, J. F. Dicello and P. D. Hiebert

SUBMITTED TO: Nuclear Science Symposium, San Francisco, CA, Oct. 19-21, 1977

By acceptance of this article for publication, the publisher recognizes the Government's licensed rights in any copyright and the Government and its authorized representatives have no restricted right to reproduce in whole or in part said article under any copyright secured by the publisher.

The Los Alamos Scientific Laboratory requests that the publisher identify this article as work performed under the auspices of the USERDA.

los alamos scientific laboratory
of the University of California
LOS ALAMOS, NEW MEXICO 87544

An Affirmative Action/Equal Opportunity Employer

DISTRIBUTION OF THIS DOCUMENT IS UNLIMITED

A PULSED SYSTEM FOR OBTAINING MICRODOSIMETRIC DATA WITH HIGH INTENSITY BEAMS*

M. Zaider, J.F. Dicello, and R.D. Hiebert
University of California
Los Alamos Scientific Laboratory
Los Alamos, New Mexico 87545

The use of heavy particle accelerators for radiation therapy requires high intensity beams in order to produce useful dose rates. Conventional microdosimetric techniques are not applicable under these conditions because exceedingly high count rates result in detector damage, gas breakdown, and saturation effects in the electronics. We describe a new microdosimetric system developed at the Pion Biomedical Channel of LAMPF. The accelerator provides a variable low intensity pulse once every ten high intensity macropulses. The voltage on the detector is pulsed in coincidence with the low intensity pulse so that we were able to operate the detector under optimum data-taking conditions. A low noise two-stage preamplifier was built in connection with the pulsed mode operation. A comparison is made between data obtained in pulsed (high intensity beam) and unpulsed (low intensity beam) modes. The spectra obtained by the two methods agree within the experimental uncertainties.

Introduction

Microdosimetry is the study of the statistical variations in absorbed energy within small biological volumes exposed to radiation. The need for considering microdosimetry is a direct consequence of the fact that biological effects depend not only on the mean energy per unit mass absorbed by the irradiated medium (dose), but also on the distribution of discrete energy depositions in microscopic sites such as the cell nucleus, chromosomes, or DNA. Usually microdosimetric data are obtained by the use of proportional counters filled with a gas at low pressure.[1,2] The gas volume simulates the size of a biological site of solid material, i.e., it has the same composition and the same mass. Various studies[3,4] seem to indicate that volumes equivalent to spheres of 1 to 2 μm diameter in terms of unit density tissue are particularly relevant. One can use detectors with large linear dimensions (a few cm) but with correspondingly low gas densities if the radiation field is sufficiently uniform and homogeneous. Experimental techniques for microdosimetry have been described in detail in literature.[5]

In recent years, several particle accelerators have been built with special facilities for investigating the use of heavy particles for radiation therapy.[6] Among the heavy particles, pions are recognized as having unique combinations of properties suitable for radiotherapy.[7,8] One of the requirements necessary for the practical application of a pion beam to therapy is that the beam intensity should be high enough to produce useful dose-rates. The Clinton P. Anderson Meson Physics Facility (LAMPF), where the present work was performed, is presently the only accelerator which satisfies this requirement.[9]

The immediate consequence of the high intensity beams is that microdosimetric data must be obtained under exceedingly high counting rates. Conventional microdosimetry techniques are not applicable under these conditions because of detector damage, gas breakdown, pile-up and dead-time effects, and saturation of the electronics.

The present paper describes a new system developed at LAMPF in order to overcome these problems.

Experiment

Beam Description

The 800-MeV proton beam at LAMPF[10] passes through different production targets to generate secondary pion beams. The time profile of the beam is characterized by a macrostructure of 120 pulses per second, each one 500 μs long. Presently, the proton current is 250 μA, average, and the instantaneous pion rate at the Biomedical channel is about 2×10^7 pions/sec cm^2.[11] Ultimately, the proton current will be 1 mA, average.

Any attempt to reduce the beam intensity should comply with two conditions: a) the phase-space of the pion beam as used for therapeutical studies should be preserved; and b) LAMPF has many experiments running simultaneously and no substantial interference with other ongoing experiments is possible. The solution adopted is the following: A low intensity beam pulse (called the 1 in 10 pulse) is generated in the injector once every 10 macropulses. The intensity of this low intensity pulse can be controlled through an electrostatic deflector (chopper plates) placed in the proton beam line at the Alvarez drift-tube stage. The average proton intensity is kept constant by increasing the intensity of the remaining high intensity pulses.

The microdosimetric measurements were taken during the 1 in 10 pulses.

The Proportional Counter

The detector consists of a modified Rossi-type spherical proportional counter.[12] The sensitive volume is delimited by a tissue-equivalent plastic shell. Electron multiplication occurs between a helix and the center wire (anode) which is dc-coupled to the preamplifier. The first stage of a low noise preamplifier[13] is encased in the chamber base and is connected directly to the anode of the detector (see Fig. 1). The counter gas is a tissue-equivalent propane-based mixture.[14]

As mentioned before, one of the problems which could have developed was electronic breakdown during the high intensity pulses. The consequences of this would be detector deterioration and malfunctioning of the system during the 1 in 10 low intensity pulse because of saturation effects. The following modifications were made: The voltage on the shell was pulsed using a fast high voltage reed relay such that during the high intensity pulses the same voltage was on the shell and the helix. In this way, the active volume of the chamber was reduced during the high intensity pulses. During data collection (approximately 500 μs)

---

*These investigations were supported by Contract #7405-ENG-36 from the U.S. Energy Research and Development Administration to the University of California and by USPHS Grant No. CA-14052 from the National Cancer Institute, Division of Research Resources and Centers to the University of New Mexico Cancer Research and Treatment Center.

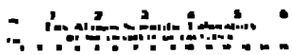

Figure 1

The spherical proportional counter used in the present work. The first and second stage of the low noise preamplifier are also shown.

the shell to helix voltage was kept at a ratio 5 to 4. The chamber was activated immediately after the end of the last high intensity pulse preceding the 1 in 10 pulse, allowing a complete stabilization of the shell-helix voltages during the measurement.

The transient effect from pulsed high voltage, as well as the requirement for lowest possible electronic noise and wide dynamic amplitude range, places severe limitations on the preamplifier design. The solution has been found in a modified version of a charge-sensitive preamplifier designed at Brookhaven National Laboratory*. A circuit diagram of this preamplifier is shown in Fig. 2. To minimize input shunt capacitance, the field effect transistor and critical feedback components are placed on a miniature circuit module as close as possible to the proportional counter. The decay time of the feedback network is kept short to minimize pulse pile-up (50 μs). The input to the preamplifier is capacitively coupled in such a way to transmit more than 90% of the desired charge pulse but still recover from the pulsed high voltage transient in 5 ms or less. Noise performance is somewhat degraded but remains quite good at less than 4×10^{-17} C rms measured with an amplifier with 1 μs shaping constant.

*The Model III700, designed by V. Radeka

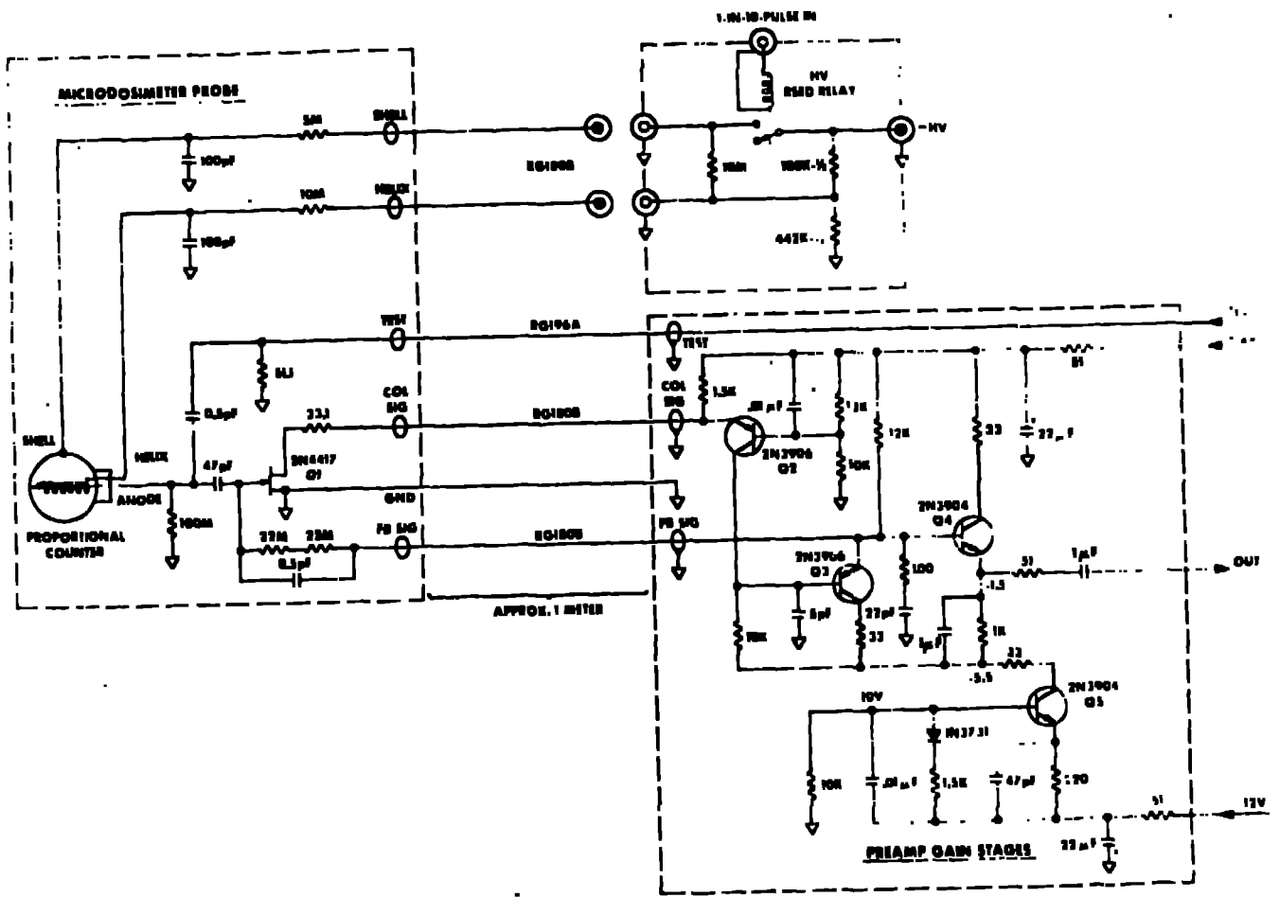

Figure 2

Circuit diagram of the preamplifier used in the present work.

Results

The system has been tested with a pulser and with 5.5-MeV alpha particles for linearity of response and sensitivity over a wide dynamic range, both out of beam and in beam. A microdosimetric spectrum for 80 MeV π^- obtained with the present system in displayed in Fig. 3. The detector was placed in air at the focal plane of the biomedical channel. For comparison we also display a spectrum obtained by Amols et al[9] using a conventional microdosimetry system and a similar beam tune (but a very low beam current). The two spectra are similar. The small differences are a result of the earlier data being taken in a large water phantom with a slightly different beam tune. In conclusion, the results of extensive testing show that the accuracy, sensitivity and reliability of this method are comparable to previous systems used at lower beam intensities.

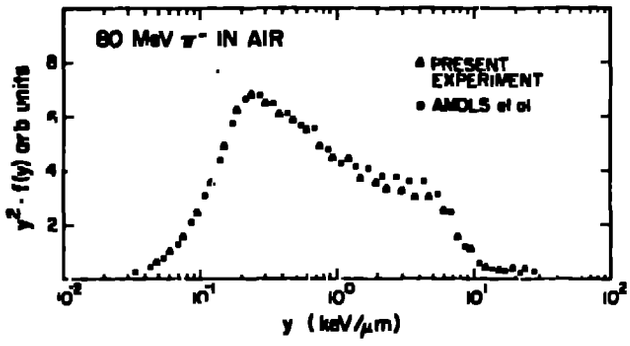

Figure 3

Microdosimetric distributions obtained in the present experiment and by Amols et al.[9] The abscissa represents the lineal energy y which is defined[3] as the energy of an event divided by the mean chord length of the active volume (2/3 the simulated diameter). The ordinate is the product of y and the dose distribution yF(y), where F(y) is the frequency distribution in y. This representation is frequently used because the area under the curve in a range of y is proportional to the fraction of the dose in that range of y (see Ref. 3).

References

1. Rossi, H.H., and Rosenzweig, W., Radiat. Res., 2, 417 (1955).

2. Rodgers, R.C., Dicello, J.F. and Gross, W., Radiat. Res. 54, 12-23 (1973).

3. Kellerer, A.M., and Rossi, H.H., Radiat. Res. 47, 15 (1971).

4. Conger, A.D., Mutation Res. 25, 131 (1974).

5. Rossi, H.H., Radiation Dosimetry, Attix, F.H. and Roesch, W.C., eds. Academic Press, New York, Vol.1 p.43.

6. Raju, M.R. and Phillips, T.L., Informal Report LA-6588-MS, Los Alamos Scientific Laboratory.

7. Fowler, J.F., Modern Trends in Radiotherapy, Deeley, T.J.F. and Wood, C.A.P., eds. Butterworths, London 1967, p. 145.

8. Dicello, J.F., Fessenden, P. and Henkelman, R., Ind. J. of Radiat. Oncology Biol. and Physics, in press.

9. Rosen, L., Informal Report LA-DC-72-355 (Revised) Los Alamos Scientific Laborator,.

10. Howard, H.H., LAMPF Users Handbook, MP-DO-A-UHB, Los Alamos Scientific Laboratory.

11. Zalder, M., Dicello, J.F., Amols, H., Hutson, R. and Luckstead, S.,Abstract at Radiation Research Society Meeting, San Juan, Puerto, Rico, 1977.

12. Amols, H.I., Dicello, J.F. and Lane, T.F., Proceedings of the Fifth Symposium on Microdosimetry, Verbania Pallanza (Italy), September 22-26, 1975, p. 911.

13. Preamplifier designed by V. Radeka, BNL, and built and modified by R. Heibert, Los Alamos Scientific Laboratory.

14. Srdoc, D., Radiat. Res. 43, 302 (1970).