CONF-781095--2

LA-UR -78-2875

MASTER

TITLE: PARITY VIOLATION IN THE SCATTERING OF 15 MEV PROTONS BY HYDROGEN

AUTHOR(S): D. E. Nagle, J. D. Bowman, C. Hoffman, J. McKibben, R. Mischke, J. M. Potter
LASL

H. Frauenfelder, L. Sorenson
Univ. of Illinois

SUBMITTED TO: AIP Conference Proceedings

(International Symposium on High Energy Physics--10/26-28)

NOTICE

This report was prepared as an account of work sponsored by the United States Government. Neither the United States nor the United States Department of Energy, nor any of their employees, nor any of their contractors, subcontractors, or their employees, makes any warranty, express or implied, or assumes any legal liability or responsibility for the accuracy, completeness or usefulness of any information, apparatus, product or process disclosed, or represents that its use would not infringe privately owned rights.

By acceptance of this article for publication, the publisher recognizes the Government's (license) rights in any copyright and the Government and its authorized representatives have unrestricted right to reproduce in whole or in part said article under any copyright secured by the publisher.

The Los Alamos Scientific Laboratory requests that the publisher identify this article as work performed under the auspices of the USERDA.

los alamos
scientific laboratory
of the University of California
LOS ALAMOS, NEW MEXICO 87545

An Affirmative Action/Equal Opportunity Employer

Form No. 836
St. No. 2629
1/75

UNITED STATES
ENERGY RESEARCH AND
DEVELOPMENT ADMINISTRATION
CONTRACT W-7405-ENG. 36

PARITY VIOLATION IN THE SCATTERING OF 15 MEV PROTONS BY HYDROGEN*

D. E. Nagle, J. D. Bowman, C. Hoffman
J. McKibben, R. Mischke, J. M. Potter
Los Alamos Scientific Laboratory, Los Alamos, N. Mex. 87545

H. Frauenfelder, L. Sorenson
Univ. of Illinois, Urbana, Ill. 61801

ABSTRACT

A transmission experiment to measure the longitudinal asymmetry for polarized protons on hydrogen. The present result is $(-1.7\pm0.8)\times10^{-7})$.

I. INTRODUCTION

Parity violating (PV) effects in the nucleon-nucleon interaction are at present the only practical way to study the strangeness-conserving nonleptonic part of the weak interaction. Although the expected effects in pp scattering are small ($\sim10^{-7}$) it is important to study this simple nucleon-nucleon system. This is a status report of our 15 MeV experiment.

II. PLAN OF THE EXPERIMENT

The idea is to measure the scattered beam current integrated over a solid angle of nearly 4π, and divide it electronically by the transmitted beam. The quotient depends on the integrated cross section, and a change with beam helicity would indicate a PV piece in the scattering amplitude. The PV effect is estimated at 10^{-7} to 10^{-6}, which requires five orders of magnitude increase in sensitivity over experiments of twenty years ago. At present, we have attained a sensitivity of seven parts in 10^8.

To attain this level we use: integral counting, a synchronous detection detector design to minimize systematic errors, design of the source and use of servo control to minimize spin-correlated modulations of the beam, optical isolation, and a program of measuring and correcting for residual systematic errors.

Figure 1 shows layout of the experiment. The beam spin direction from the source is rapidly reversed at a 1 kHz frequency controlled by a reference oscillator. The scattering occurs when the beam passes along the axis of a cylinder containing hydrogen gas at about 100 psi (Fig. 2). The outer part of the vessel contains four slabs of scintillating plastic, symmetrically arranged above, below, to the right, and to the left of the beam. Each slab is viewed by three photomultipliers. The sum of the twelve scattering detectors is called the S signal. About 99% of the beam is transmitted through the scattering chamber to a set of five gold electrodes, arranged as center, up, down, and left and right with respect to the beam direction. The sum of these five currents is called B. (S/B is formed

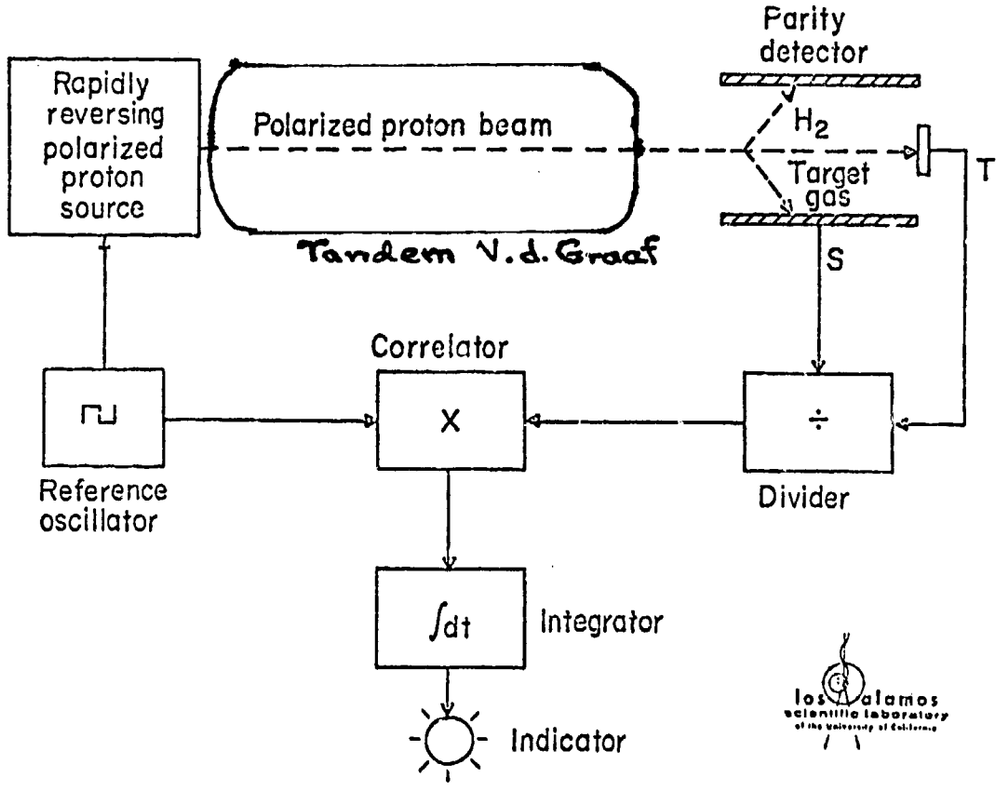

Fig. 1. Scheme for the parity violation experiment.

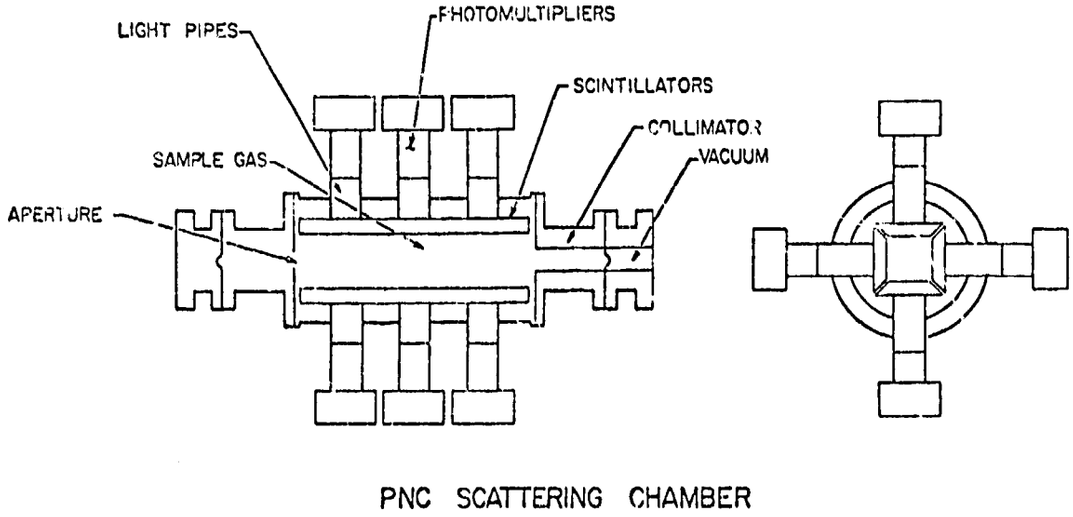

Fig. 2. Scattering chamber and detectors.

with an analog divider, and the synchronous component (S/B)(1 kHz) stored in an on-line computer as the nominal PV signal.

Most of the effort with the experiment is aimed at improving our understanding of the principal sources of systematic errors, reducing their magnitudes, measuring the residual amounts, and correcting the data for them to the extent required. This requires a very careful study of polarized source and the reversal technique

I. POLARIZATION AND POLARIZATION REVERSAL

The be polarization is produced in the so-called spin filter region of the source, described by McKibben.[1] Leaving this region the beam is longitudinally polarized with a sense (helicity) specified by the sign of B_S, an axial field in the spin filter. Next, the helicity of the beam is reversed at 1 kHz by a precession field B_T located between the Lamb-shift polarizer[2] of the source and the argon charge ionizer. B_T is set to produce a precession angle of 180°. The usual time pattern of B_T, called alternating reversal, has B_T successively +, 0, -, 0, and so on; resulting in the helicity pattern +, -, +, -.

After leaving the source a DC magnet and crossed electric field, below referred to as "precessor", is used optionally to insert a phase shift of 180° between the beam helicity and the reference oscillator. This is normally done every few hours during data-taking, as is the helicity phase governed by the spin filter field.

IV. SYSTEMATIC ERRORS

Most of the unwanted modulation of the beam creating sources of systematic errors originate in processes occurring in the reversal region; they include:

a. quenching of the 2s state of H, giving current modulation,
b. ionization of a small part of the beam in the reversal region, giving position modulation and transverse polarization modulation,
c. spatial misalignment of magnetic fields, giving transverse polarization.
d. improper values of magnetic field gradients, giving residual transverse polarization modulation, and also giving rise to a spatial distribution of transverse polarization having a non-zero second moment at the detector.
e. correlation between polarization and phase space of proton beam.

Each of these effects has been extensively studied and brought under control to a substantial degree. Table I illustrates the situation:

Another source of systematic errors is ground loops, i.e., electrical paths which transmit a spurious signal at the reference or spin modulation frequency. These have been reduced by using optical isolators. The program for reducing the effects of these and other errors is as follows: first, understand the physical processes going on in the source which give rise to the unwanted beam modulation; second, modify the source to reduce that modulation component; third,

adjust the detector symmetry to reject that component; fourth and fifth, measure the amount of residual modulation, and store the result

TABLE I. TYPICAL SYSTEMATIC ERRORS

	Sensitivity	Amplitude	Correction to A_L
Current Modulation	4×10^{-4}	6×10^{-7}	2.4×10^{-10}
Position Modulation (one coordinate)	3.7×10^{-4} mm	9×10^{-5} mm	3.3×10^{-8}
Transverse Polarization (one coordinate)	2.7×10^{-5}	1×10^{-3}	2.7×10^{-8}

in the computer along with the PV signal at the standard 1 sec interval. From time to time measure the residual sensitivity of the source to that modulation component. Finally, make a numerical correction for that effect (off-line).

As an example, consider the error reduction program as it has been applied to one beam variable, namely, current modulation at the reference frequency f_o. The principal causes of this are: 1) undesired quenching of the 2s state, and 2) deflection of a prematurely ionized component, followed by interception of a portion of the beam at some aperture. The quenching is reduced by supplying a compensating electric field at right angles to the alternating magnetic field which precesses the spin. The magnitude of the E field is set so that for the atoms moving at the mean velocity of the beam, the sum of the Lorentz fields is zero. The reversal scheme is such that the fundamental component of current modulation is at $f_o \div 2$, not f_o. The f_o component is much reduced.

The unwanted ionization is reduced by cryopumping the critical regions of the source, and with appropriate sweeping fields. The Lorenz balancing of the fields also means that for the ions, synchronous forces are suppressed.

In the detector electronics system, the ratio of scattered to transmitted beam in first order is independent of current modulation. The remaining current modulation on the transmitted (B) signal is used as the error signal on a feedback servo to the source, where the amplified signal is applied to an auxiliary quench electrode. Finally, the residual current modulation on the B signal is monitored by the computer. The detector sensitivity to current modulation is measured from time, and an attempt is made to correct this residual, see (Table I). Similar techniques are used to suppress the other unwanted types of modulations on the beam.

At present, there are seven servo control channels applied to keeping the beam centered and unmodulated. Namely, when the servo feedback loops are closed, the tandem beam is very stable and quiet.

V. DATA ACQUISITION

The experiment is operated under control of a small computer. At one-second intervals the data from the experiment are recorded. They include the following 1 kHz components, suitably digitized:

$$Y = (S-B)/B,\ x = (B_L-B_R)/B_{center},\ y = (B_u-B_D),\ p_x = (S_u-S_D)/S_u+S_D),$$

$$p_y = (S_L-S_R)/(S_L+S_R);\ i = B_L+B_R+B_u+B_D+B_{center}\ .$$

The data are recorded for 400 intervals, then the computer prints out the average values and standard deviations for Y,x,y,p_x,p_y and other quantities of interest. The computer then selects a new combination of signs for the fields in the spin filter and Argon regions and starts another 400 point set. After sixteen 400 sec runs, the data taking is interrupted and the sensitivities measured. If any have become large, the detector is readjusted. Periodically during the run made in June '78 the signs of the precessor phase and of the spin filter field were reversed.

Table II gives the state of our knowledge at the end of 1977 of longitudinal asymmetry A_L for 15 MeV protons on ^1H and ^2H. Longitudinal asymmetry is defined as $[\sigma(+) - \sigma(-)] \div [\sigma(+) + \sigma(-)]$, where + and - denote the two helicity states of the beam. It is seen that A_L was consistent with zero at the 10^{-7} level in H and D.

TABLE II. LONGITUDINAL ASYMMETRY DATA (1977)

	D_2	H_2
$A_L x10^7$ uncorrected	-1.2 ± .85	+0.8 ± 1.4
Sum of systematic corrections	-0.81	0.75
$A_L x10^7$ corrected	-0.35 ± 0.85	+0.05 ± 1.4

In January '78 we took data for about two weeks. Four sets of data were taken, corresponding to four different sets of "precessor" and spin filter combinations. They are listed in Table III as A, B, C, D. A minus one in the precessor column of Table III indicates that a phase shift of π in the phase of the beam helicity has been inserted by the precessor. The helicity column entry is the product of the precessor and spin filter helicities; i.e., it is the beam helicity phase. Roughly equal time was spent taking data in each of the four configurations.

TABLE III. JANUARY 1978 DATA

Label	Prec.	Spin Filter	Helicity	Sec.	Data x 10^7
A	-1	+1	+1	68800	-5.40 ± 1.32
B	-1	+1	-1	68545	-1.36 ± 1.35
C	+1	-1	-1	60000	-0.55 ± 1.24
D	+1	+1	+1	58400	-2.26 ± 1.25

We can form four linear combinations of A, B, C, and D, given in Table IV. The various types of systematic error contribute differently in these linear combinations. The current modulation contribution i, horizontal displacement x, vertical displacement y, and ground loop g are unaffected by the spin filter and precessor phases. Transverse polarization p_x contribution correlates with helicity, as does the true parity violation effect PV. No known piece correlates with "spin filter", or with "precessor". This is because of special coils to compensate "spin filter" reversal on p_x and p_y, and because of special retuning after "precessor" reversal to compensate P_x and P_y. We compare these results with measured beam variables and measured sensitivities from data set "Y" (about 4% of the data), and show the estimated contribution as the last column.

TABLE IV. COMBINED DATA

Combination - Contributions	Data	Estimate
1/4(A+B+C+D) ⇒ g+i+x+y	-2.4 ±.64	-2.8 ±.73
1/4(-A-B+C+D) ⇒ 0	+.99 ±.64	0
1/4(-A+B-C+D) ⇒ 0	+.58 ±.64	0
1/4(A-B-C+D) ⇒ pv + px	-1.44 ± .64	pv - .025

The contributions to the (A+B+C+D)/4 estimate are g = -3.0 ± .7, i = -0.4 ± .1, x = 0.6 ± 0.1 and y = 0.04 ± .05, for a net value of -2.8 ± 0.73. The p_x contribution to the helicity (bottom row Table IV) is -0.025, leading to a PV effect of (-1.4 ± 0.6) x 10^{-7}. Dividing by the beam polarization, 85%, the longitudinal asymmetry is A_L = (-1.7 ± 75) x 10^{-7}.

This result is not in disagreement with the estimates of Brown et al.[2] and of Henley et al.[3] Further improvement of the sensitivity by a factor of perhaps two seems practical.

REFERENCES

*Work supported by U.S. Department of Energy and the National Science Foundation.

1. J. M. McKibben. Proc. 1976 ANL Conf. on Polarized Beams and Targets, AIP Conference Proceedings No. 35, p. 375.
2. V. Brown, E. M. Henley and F. R. Krejs, Phys. Rev. C 9, 935 (1975).
3. E. M. Henley and L. Wolfenstein, Nucl. Phys. A300 (1978), p. 265.
   E. M. Henley, Nucl. Phys. A300 (1978), p. 273.