LA-UR-79-2552

MASTER

TITLE: [illegible]

AUTHOR(S): [illegible]

SUBMITTED TO: [illegible] Linear Accelerator Conference, [illegible], Sept. 9-14, 1979

By acceptance of this article for publication the publisher recognizes the Government's (license) rights of any copyright and the Government and its authorized representatives have unrestricted right to reproduce in whole or in part said article under any copyright secured by the publisher.

The Los Alamos Scientific Laboratory requests that the publisher identify this article as work performed under the auspices of the USERDA.

los alamos
scientific laboratory
of the University of California
LOS ALAMOS NEW MEXICO 87545

An Affirmative Action Equal Opportunity Employer

UNITED STATES
ENERGY RESEARCH AND
DEVELOPMENT ADMINISTRATION
CONTRACT W-[illegible]

1979 LINAC ACCELERATOR CONFERENCE

THE FUSION MATERIALS IRRADIATION TEST (FMIT) ACCELERATOR*

E. L. Knapp, D. J. Liska and W. D. Machalek

University of California, Los Alamos Scientific Laboratory
Los Alamos, New Mexico 87545

Introduction

The Fusion Materials Irradiation Test (FMIT) Facility will be built at Hanford, Washington, and operated by the Hanford Engineering Development Laboratory (HEDL), which is managed by the Westinghouse Corporation. The function of the FMIT facility is to produce 14-MeV neutrons to develop critical materials for fusion reactors. The total estimated cost of the entire facility is $105 million.

The neutron generator consists of a linear deuteron accelerator that injects 35-MeV deuterons into a flowing lithium blanket and produces 14-MeV neutrons by a stripping process. The Los Alamos Scientific Laboratory (LASL) is responsible for the design and ultimate performance of the accelerator. The design activities will be performed by a team of LASL and HEDL engineers working at Los Alamos under the technical supervision of LASL. The accelerator components will be manufactured by U. S. industry. The HEDL will be responsible for the installation while LASL will be responsible for the final commissioning of the accelerator. This paper presents an overview of the accelerator.

Design Choices

Because of the length of the irradiation testing period, perhaps several years, the facility must operate essentially as a neutron factory with high reliability and high availability. These requirements guided the design philosophy for the accelerator.[1] Because experience has shown that the reliability of ion sources and high-voltage accelerating columns is inversely proportional to the operating voltage, a system that operates at a modest voltage is an attractive option. Often this option is not viable because of the design difficulties of the first drift tube. A recent proposal in the DASR[2] for a novel low-energy accelerating structure, which we call the Radio-Frequency Quadrupole (RFQ), allows the possibility of designing a low-voltage injector system that can be matched to a conventional drift-tube linac accelerator. The FMIT design consists of a 100-keV injector, an RFQ structure, and a conventional linac. A 5-MeV prototype accelerator is being built at LASL to develop and to certify these design concepts for the FMIT accelerator.

*Work performed under the auspices of the U. S. Department of Energy.

An 80-MHz operating frequency was chosen for FMIT to minimize the size of the components, while staying within the availability of reliable rf power components and systems. An average accelerating gradient of 1 MeV per meter was selected to stay within the Kilpatrick Criterion and to minimize the length of the linac. Certain other mechanical design features were dictated by the need for "hands on" or mechanically assisted maintenance that will be required over the 20-year life of this facility.

Table I shows the principal specifications for the accelerator.

TABLE I

ACCELERATOR SPECIFICATIONS

Particle	Deuterons
Duty Factor	100%
Frequency	80 MHz
Output Energies	20 MeV and 35 MeV
Maximum Beam Current	100 mA
Average Energy Gain	1 MeV/m
Injector Energy	100 keV
Low-β Accelerator (RFQ) Output	2 MeV
Number of Linac Tanks	2
Number of Drift Tubes	72
Inner Diameter of Linac Tanks	2.48 m and 2.40 m
Length of Linac Tanks	32 m
Total Length of Accelerator	42.7 m
Total rf Power	5.35 m
Operating Pressure	1.33×10^{-4} Pa

System Layout

Figure 1 shows the general layout of the accelerator. The injector introduces a 100-mA beam of deuterons into the RFQ that captures, bunches, and accelerates the beam to 2 MeV. The drift-tube linac consists of two rf cavities that

Fig. 1. The FMIT accelerator.

accelerate the beam to a maximum of 35 MeV. The second cavity can be unexcited and can be used to transport the 20-MeV beam from the first cavity to the High-Energy Beam Transport (HEBT system Energy Dispersion Cavity (EDC). The purpose of the EDC is to spread the energy of the almost monoenergetic 35-MeV or 20-MeV beam for proper operation of the target. The straight portion of the HEBT transports the beam to a switching magnet that directs the beam to either of the two identical targets by a periodic system of bending magnets. The final magnets focus the beam to a 1- by 3-cm spot on the target. The system also includes a pulsed duty beam stop for tune-up of the machine.

Injector

The FMIT injector[3] being developed uses a cusp-field ion source based on a Culham design.[4] The ion source is a water-cooled cylindrical anode with 30 ceramic bar magnets arranged axially around the outside of the anode wall to generate a periodic cusp magnetic field inside the anode. The filament mounting plate is installed at the top end of the chamber opposite the extractor. The cusp field prevents the electrons from moving directly to the anode and increases their lifetime in the chamber, thus significantly increasing the efficiency of the source. The 100-kV extractor is a single-gap accelerating column with molybdenum electrodes. A model of this injector has been tested with very satisfying results. The gas efficiency is over 40%. The source is very quiet and stable and the filament life is expected to be over 350 hours.

Radio-Frequency Quadrupole

The RFQ serves two functions; converts the DC beam from the injector into a bunched beam acceptable to a drift-tube linac, and then accelerates the beam to the energy required for injection into the first drift tube. A vigorous program is underway at LASL to develop an RFQ system for FMIT.[5] The RFQ consists of four periodically modulated bars in an rf cavity driver in a TE[illegible] mode. The structure [illegible] like a quadrupole focusing field [illegible] axis particles experience focusing in one [illegible] and defocusing in the other and vice versa [illegible] alternate rf half-cycles. The result is a strong focusing system that will transport the beam without acceleration along the axis. Longitudinal acceleration occurs because of the radial modulations on the vanes, which produce longitudinal field components in the fringing field. The periodicity of the modulation is varied, as the particle energy increases, to keep the particle in phase with the rf electric field.

A number of cold models have been successfully evaluated with bead-pull techniques. The Z/Q is satisfactory and methods for coupling radio frequency into the cavity have been developed. The design and the construction of a 425-MHz proof-of-principle test are underway with experiments scheduled to begin by January 1980. Simultaneously, design studies have begun for an 80-MHz RFQ prototype system that is scheduled for evaluation in 1981.

Linac

The Linac is being designed for a nearly maximum shunt impedance (ZT^2) consistent with the Kilpatrick Criterion to minimize the rf power requirements. The average value of ZT^2 in both tanks is more than 37 [illegible]/m. The inner diameter of each tank is about 245 cm. The 2- to 20-MeV tank is about 18 m long and the second tank is about 15 m long. The intertank spacer between the two tanks is one beta-lambda in length (54.7 cm at 20 MeV). The tanks will be fabricated of 2.5-cm-thick copper-clad steel surrounded by a continuous steel shell jacket for longitudinal counterflow flood cooling.

Although the linac will be designed for minimum beam spill, it is recognized that some spill is inevitable and it is assumed to be 3 μA/m plus some "hot spots." This will lead to activation levels that preclude anyone entering the tanks after the linac has been put into operation. A design concept used on the CERN Linac was adopted for the FMIT Linac. The FMIT system[7] uses girder strongbacks supported by the tank stiffening rings, as shown in Fig. 2. Eleven girders are required, each one about 3 m long. A girder will weigh about 3000 kg and will support from 3 to 15 drift tubes. The drift tubes will be installed and aligned on the girders in an alignment dock. After installation in the tanks the various girders will be aligned with each other.

The shape of the drift tubes was optimized using the SUPERFISH code. The drift-tube noses are tapered but still meet the Kilpatrick Criterion with a maximum surface field stress of 10.5 MV/m while minimizing the amount of rf power required. Because the FMIT is continuous duty, the drift-tube faces are water cooled by

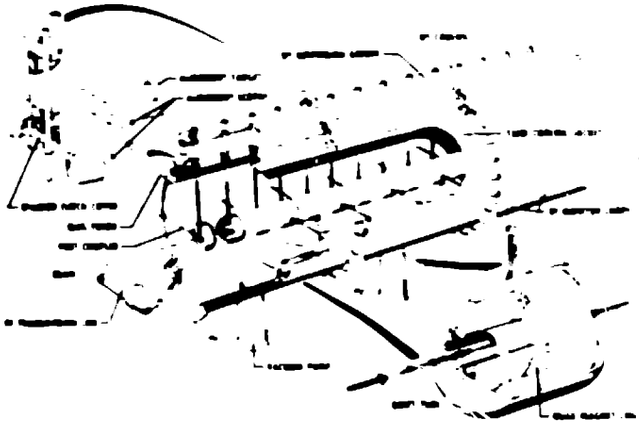

Fig. 2. The drift-tube linac.

an independent cooling system. Each drift tube incorporates a quadrupole magnet that is also independently cooled.

The final component in the linac is the EDC, which is required to spread the energy of the linac by plus and minus 750 keV so that the energy will be deposited at various depths in the lithium target. The EDC is a simple capacitively loaded TM010 resonator that has a gap about equal to the last gap in the linac and a diameter equal to the linac tank. It is driven slightly off the 80-MHz resonance so that the resultant beat is only a few megahertz.

High-Energy Beam Transport

The HEBT system[8] is designed to transport the 3.5-MW, 100-mA continuous deuteron beam from the linac to either of two targets. The HEBT must transport a beam with a total possible geometric emittance of 68.5π cm-mrad unnormalized with a total energy spread of 1.5 MeV.

Figure 3 shows the layout of the HEBT. The first section of the HEBT is an extension of the periodic quadrupole section similar to the quadrupoles inside the linac. This section is used to install beam diagnostics instruments required for accelerator operation. The quadrupole matching section is required to match the beam to the bending system. The periodic bending system consists of four identical bending magnets with the angle of bend of the second and fourth magnets reversed. A mirror image of this system transports the beam to the second test cell. Vertical focusing is provided by the downstream edge angle of each magnet such that the phase shift of the cell is 90° in both planes with equal cell lengths in both planes. The remaining magnets in the transport system steer the beam and finally focus it to a 1- by 3-cm spot on the target.

Fig. 3. The FMIT HEBT system.

The entire HEBT will be suspended from the ceiling to line up with the 10-foot beam center line in the linac. This suspension system will allow easy access to the HEBT for maintenance.

Radio-Frequency System

The FMIT rf system[9] is designed to deliver a maximum of about 9 MW of rf power. The present design requires 3.5 MW for the beam plus about 1.9 MW for copper losses. The final amplifiers will operate at about two-thirds of their maximum ratings. A block diagram of the rf system is shown in Fig. 4. The 80 MHz is generated by a crystal oscillator and flows through the low-power signal amplifiers to the high-power amplifiers. Phase and amplitude control is done at the low-power amplifier level. The high-power amplifiers, which will be designed and constructed by a commercial vendor, will each use a single EIMAC 8973 tetrode as the final amplifier tube. This tube has been evaluated at over 500 kW at 80 MHz and it appears quite satisfactory for this application. The system uses multiple drives in all tanks and it is designed so that the accelerator can operate for a limited time with one rf module out of service in each tank.

The Prototype

A prototype of the first 5 MeV section of the accelerator will be built and evaluated at LASL to confirm the design choices in this part of the FMIT accelerator. The prototype will consist of a 100-keV injector, an RFQ low-beta accelerator, the first girder of drift tubes in a short linac tank, and an EDC. All these components, with the exception of the short tank, will be exactly prototypical of the FMIT accelerator parts. Four prototypical rf modules will be used to supply the rf power for the RFQ and the Linac; a special unit will power the EDC. The control system and the vacuum system will be equivalent to those in the FMIT system. The prototype injector will begin operating in early 1980 and beam through the entire prototype system is scheduled for early 1982.

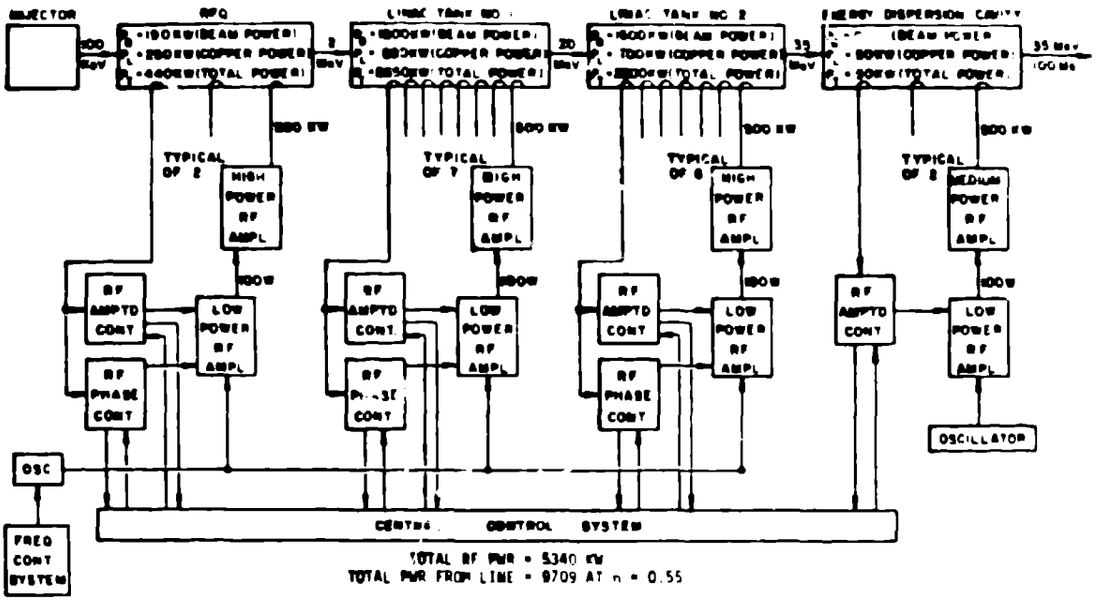

Fig. 4. A block diagram of the rf system.

Design Status and Schedule

A conceptual design of the complete FMIT accelerator has been completed and approved. Preliminary design has begun with emphasis on the design and procurement of the prototype system. Completion of the design of the entire accelerator system is scheduled for mid-1981. Accelerator installation will begin in the fall of 1982 with check-out beginning about a year later. The entire facility is scheduled to begin operating in September 1984.

References

1. R. A. Jameson, "High Intensity Deuteron Linear Accelerator (FMIT)," IEEE Trans. Nucl. Sci. NS-26, No. 3, pp. 2986-2991 (June 1979).
2. I. M. Kapchinski and V. A. Teplyakov, "Linear Ion Accelerator with Spatially Homogeneous Strong Focusing," Pribory i Technika Eksperimenta, 119, No. 2, pp. 19-22 (March-April 1970).
3. D.D. Armstrong, E.A. Meyer, J.D. Schneider and H.L. Rutkowski, "Progress Report on Testing of a 100-kV, 125-mA Deuteron Injector," IEEE Trans. Nucl. Sci. NS-26, No. 3, pp. 3009-3011 (June 1979).
4. A. Goede, T.S. Green and T. Singh, "Particle Balance in a Picket Fence Ion Source," 8th European Conf. on Confined Fusion and Plasma Physics, Prague, Czechoslovakia, Sept. 1977, Vol. 1.
5. J.M. Potter, S.W. Williams, F.J. Humphry, and G.W. Rodenz, "Radio Frequency Quadrupole Accelerating Structure Research at Los Alamos," IEEE Trans. Nucl. Sci. NS-26, No. 3, pp. 3745-3747 (June 1979).
6. G.P. Boicourt and D.A. Swenson, "Choice of Geometry for the Alvarez Section of the FMIT Deuteron Linac," IEEE Trans. Nucl. Sci. NS-26, No. 3, pp. 3012-3014 (June 1979).
7. D.J. Liska, R.G. Schamaun, R.C. Potter, D.M. Clark, D.R. Greenwood and J.A. Frank, "Design of the Accelerating Structures for FMIT," IEEE Trans. Nucl. Sci. NS-26, No. 3, pp. 3052-3054 (June 1979).
8. K.E. Nelson, J.A. Farrell, D.J. Liska, D.D. Chamberlin, M.T. Wilson, P.M. Giles, R.C. Potter, T.R. Cole and C. Caldwell, Jr., "High-Energy Beam Transport in the Hanford FMIT Linear Accelerator," IEEE Trans. Nucl. Sci. NS-26, No. 3, pp. 3050-3051 (June 1979).
9. M.V. Fazio, H.P. Johnson, W.J. Hoffert and T.J. Boyd, "A Proposed RF System for the Fusion Materials Irradiation Test Facility," IEEE Trans. Nucl. Sci. NS-26, pp. 3018-3020 (June 1979).