CONF-791117--11

LA-UR-79-3224

MASTER

TITLE: NEW DEVELOPMENTS IN NONDESTRUCTIVE MEASUREMENT AND VERIFICATION OF IRRADIATED LWR FUELS

AUTHOR(S): D. M. Lee, J. R. Phillips, J. K. Halbig, Sin-Tao L. O. Lindquist, E. M. Ortega, J. C. Caine, J. Swansen, K. Kaieda, and E. Dermendjiev

SUBMITTED TO: To be presented at the American Nuclear Society Topical Conference, Measurement Technology for Safeguards and Materials Control, at Kiawah Island, SC, November 26-29, 1979.

DISCLAIMER

By acceptance of this article, the publisher recognizes that the U.S. Government retains a nonexclusive, royalty-free license to publish or reproduce the published form of this contribution, or to allow others to do so, for U.S. Government purposes.

The Los Alamos Scientific Laboratory requests that the publisher identify this article as work performed under the auspices of the U.S. Department of Energy

University of California

LOS ALAMOS SCIENTIFIC LABORATORY
Post Office Box 1663 Los Alamos, New Mexico 87545
An Affirmative Action/Equal Opportunity Employer

Form No. 836 R3
St. No. 2629
12/78

UNITED STATES
DEPARTMENT OF ENERGY
CONTRACT W-7405-ENG 36

MASTER

New Developments in Nondestructive Measurement and Verification of Irradiated LWR Fuels

by

DAVID M. LEE, JOHN R. PHILLIPS, JAMES K. HALBIG, SIN-TAO HSUE,
LLOYD O. LINDQUIST, EVITA MEDINA ORTEGA, JAMES C. CAINE, AND JAMES SWANSEN
Los Alamos Scientific Laboratory, Los Alamos, New Mexico 87545

and

KEISUKE KAIEDA
Japan Atomic Energy Research Institute, Tokyo, Japan

and

ELMIR DERMENDJIEV
International Atomic Energy Agency, Vienna, Austria

ABSTRACT

Nondestructive techniques for characterizing irradiated LWR fuel assemblies are discussed. This includes detection systems that measure the axial activity profile, neutron yield and gamma yield. A multi-element profile monitor has been developed that offers a significant improvement in speed and complexity over existing mechanical scanning systems. New portable detectors and electronics, applicable to safeguard inspection, are presented and results of gamma-ray and neutron measurements at commercial reactor facilities are given.

KEYWORDS: Nondestructive assay, ion chamber, fission chamber, axial profiles, irradiated (spent) fuel, instrumentation

INTRODUCTION

Nondestructive assay (NDA) methods for the determination of the fissile content of irradiated nuclear fuels are needed to detect diversions of fissile materials to weapons use. At the present time an applicable nondestructive technique does not exist for directly measuring the fissile content of irradiated fuel assemblies. Instead, the fissile content is normally inferred from indirect measurements of the burnup by using gamma-ray or neutron signatures.

Gamma-ray spectrometry has been investigated as a measurement technique for determining the burnup of irradiated fuels.[1-4] This method requires a high-resolution germanium detector, a multichannel analyzer system and a mechanical scanning system and collimator assembly. Through these investigations the fission products, ^{137}Cs, ^{144}Ce-Pr, and ^{106}Ru-Rh and fission product ratios $^{134}Cs/^{137}Cs$ and $^{154}Eu/^{137}Cs$ have been identified as possible burnup monitors. One limitation of this technique is that the intensities of gamma rays from the interior of the assemblies are substantially attenuated by the relatively dense fuel rods.

Gross-gamma measurements are an alternative to gamma spectrometry. Although the measurement is not able to differentiate the presence of specific fission products, it does sense the high radiation field that must be present in a spent fuel assembly. The measurement is also relatively insensitive to the interior rods because of attenuation.

Passive neutron assay has been identified as a potentially useful inspection assay method of spent fuel in a recent review[2,3] and in the IAEA Advisory Group Meeting.[4] Two aspects make the passive neutron measurement technique particularly attractive for the measurement of spent fuel assemblies. First, neutrons are less subject to self-absorption in the fuel assembly than are gamma rays. Monte Carlo calculations have shown the interior rods of PWR assemblies contribute nearly the same amount to the total neutron emission rate as the exterior rods.[5] Therefore the neutron measurement is more sensitive to all the interior pins in the fuel assembly than is the gamma-ray spectrometry measurement. Secondly, the passive neutron measurement requires very simple electronics and a neutron detector and this simplicity can be a distinct advantage in the hostile environment of a spent fuel storage facility.

In many instances when safeguards inspections are performed,the preferred NDA techniques should be simple to use; portable, easily carried from site to site; and provide rapid and reasonably accurate assays. In other cases, more detailed information is required. This can occur at away from reactor storage facilities (AFRs) and reprocessing plants where NDA methods can be used for criticality control and shipper-receiver verification. Such in-plant instrumentation must be unobtrusive and the measurements rapid enough to not interfere with normal operating routine of the facility.

As part of its on-going investigations into NDA techniques, the Los Alamos Scientific Laboratory International Safeguards Group has been actively investigating NDA methods for the characterization of spent fuel. We have performed investigations into high-resolution gamma-ray spectrometry, passive neutron assay, and gross-gamma measurements. These investigations include burnup correlations, new detector developments, and electronic development.[5-9]

This paper will address some of the more recent developments in this program. We will discuss various methods for the measurement of activity profiles, new detection systems, and portable electronics for safeguards inspections and in-plant assay. Results of experiments at BWR and PWR facilities will be given.

AXIAL ACTIVITY PROFILE

Since the axial burnup of LWR fuel assemblies depends on many factors such as axial power levels, burnable poison rods, control rods, and core locations, the axial burnup will not necessarily be the same from one fuel assembly to another. It is therefore necessary to determine the axial burnup profile of each fuel assembly if an accurate measure of the integral burnup is desired. In addition, if a rapid technique for accurately measuring the axial burnup profile of a fuel assembly can be developed, then a detailed measurement can be performed at one position and related to the entire assembly by using the profile as an integrating function.

We have measured the axial activity profile of both BWR and PWR fuel assemblies with a high-resolution gamma-ray system, a Be(γ,n) detector and an ion chamber. The typical experimental configuration for a reactor spent fuel storage facility is shown in Fig. 1. Complete gamma-ray spectra (500-2300 keV) were collected at specified axial positions on the fuel assemblies and analyzed for comparison to the other profile monitor systems. Also, the gamma-ray data was correlated with the operator-declared burnup values.

The Be(γ,n) detector (Fig. 2) is sensitive to gamma rays with energies greater than the 1660 keV threshold for photoneutron production in beryllium. Neutrons produced in the Be are thermalized by the polyethylene and are counted in the fission chamber. This particular detector is relatively insensitive to high gamma-ray fluxes. In a fission product spectra, the principal gamma ray with an energy above the 1660 keV threshold is the 2186 keV gamma ray of ^{144}Pr. The ^{144}Pr isotope has a very short half-life ($t_{\frac{1}{2}}$ = 17.3 min) and is in secular equilibrium with its parent ^{144}Ce ($t_{\frac{1}{2}}$ = 284.5 day). Therefore, the measured Be(γ,n) profile is essentially the profile of the ^{144}Ce axial distribution.

The ^{137}Cs activity from the germanium detector measurements correlated well with the declared burnup values and was used as the burnup monitor for the burnup profile. The ^{137}Cs burnup correlation is shown in Fig. 3 where the 95% confidence bounds are included. The average percent difference from the regression line is 5.1%. Similar results were obtained for the BWR fuel assemblies.

Typical PWR and BWR axial activity profiles are shown in Figs 4-7. The peak values in Figs. 4-7 were normalized to unity and since the detectors were not all at the same axial position, the profiles have been shifted so that the peak positions coincide. The agreement of the shapes of the ion chamber profiles with both the ^{137}Cs and the $Be(\gamma,n)$ profiles are within the statistical uncertainties of the measurements. Typical measurement times for each point was approximately 5 min for the $Be(\gamma,n)$ and germanium detector and approximately 10 s for the ion chamber. The speed of measurement of the ion chamber and the apparently good agreement with the ^{137}Cs profile (and therefore burnup) convinced us that a system could be designed that would eliminate the need for mechanical scanning yet maintain measurement times of approximately 10 s.

MULTIELEMENT DETECTOR

A prototype multielement detector has been designed for measuring the profile of fuel elements from a Materials Test Reactor (MTR) and is shown in Fig. 8. This detector contains fifteen identically constructed ion chamber elements equally spaced along its length (90 cm). The dose from fission product gamma rays is sensed as a current in each ion chamber element and multiplexed by portable instrumentation. The offset current of each element has been measured to be 5×10^{-12} amps.

A block diagram of the microprocessor-based portable electronics for the multielement detector is shown in Fig. 9. The current from each of the ion chamber elements is amplified by the current-to-voltage amplifier with as transfer gain of 10^{-8} A/V. These signals are multiplexed to an instrumentation amplifier whose gain is controlled by the microprocessor and digitized by the 256 channel A/D converter. The microprocessor performs numerous functions all initiated via the keyboard. It can collect and clear data, average data, provide signals for the display of the profile, calibrate the system, output data to a serial output, integrate the data between two cursor settings, monitor and change the high voltage, change the amplifier gain, and perform a programmable set of key functions. A photograph of the prototype electronics is shown in Fig. 10. The total volume of the electronics is approximately .027 m^3. It is possible by a change in software to redefine the functions of the keypad and, in addition, to permit the electronics to be operated under remote computer control.

The application of the multielement detector to BWR and PWR spent fuel is straightforward. Such a system is in the design phase for an AFR spent fuel storage facility, and will incorporate remote computer control features, neutron detector, and $Be(\gamma,n)$ detectors.

APPLICATION OF GROSS GAMMA AND NEUTRON DETECTORS TO INSPECTION

Generally, large complicated systems such as high resolution gamma spectrometry (HGRS) and multielement profile monitors are not easily applied to routine safeguards inspection. HRGS normally requires that the spent fuel assembly to be examined be isolated from adjacent fuel assemblies. Such isolation is not only time consuming, but not always acceptable to the facility operators. In addition, the collimator assembly, scanning system (either mechanical or multielement), and locating system are expensive, cumbersome and not easily and quickly assembled at each reactor site. To circumvent these drawbacks, a detector system that requires minimum fuel motion and no collimation has been developed. We have constructed an annular (ring) detector that incorporates both a gross gamma measurement and a neutron measurement. This detector is shown in Fig. 11. It is divided into quadrants with a neutron detector and an ion chamber in each quadrant. This detector is designed so that the fuel assembly is positioned inside the annulus. The annular design is intended to minimize variations in signal response due to change in the fuel assembly to detector separation.

We have tested the ring detector on 36 spent fuel assemblies at a commercial PWR reactor storage facility. In this test, two different types of neutron detectors were examined, a B-10 lined and a fission chamber. Each type was placed in opposite quadrants. Both detectors were 2.54 cm diameter x 12.5 cm long. During the examinations the B-10 lined neutron detectors lost sensitivity, presumably because of the high-radiation fields present (10^3-10^5 R/h). Therefore, the neutron results are limited to the data from fission chambers. The results for this test are shown in Fig. 12 for the neutron measurements and Fig. 13 for the gross-gamma measurements. We have plotted the sum of the 2 neutron detectors in Fig. 12 and the sum of the 4 ion chambers in Fig. 13.

The neutron data fall into basically six groups according to cooling times ranging from 4 months to 40 months. The burnup values within each group are similar with the values for the different groups ranging from 18000-38000 MWD/MTU. The uncertainties in the measurements (15-20%) were greater than the statistical uncertainty and is probably due to the difficulty in accurately positioning the detector with respect to the fuel assembly. In a water media a 1-cm positioning error can translate into an error of 10% in the relative neutron counting rate. The errors would be reduced by having a neutron detector in each quadrant.

It is interesting to note that the data plotted in Fig. 13 appear (with the exception of the 4 month cooling time data) to follow the following empirical relationship:

$$\text{Count rate} = \alpha * (\text{Burnup})^{\beta} \quad .$$

The data have not been corrected for cooling time. The fact that the short cooling time data do not follow this relationship can be explained by noting that the ^{242}Cm isotope has a short half-life (163 days) and is an important neutron emitter for short cooling but decreases in importances for cooling times ≥ 1 year. A functional relationship similar to the above has been observed several times before.[5,10]

The gross-gamma ion chamber results also fall into 6 groups. We have plotted the average for each group with the error bars indicating the standard deviation for that group average. The results exhibit a smooth functional relationship similar to that found for the decay power of irradiated fuel after discharge.[11]

The data from the ring detector was recorded using a microprocessor-based data acquisition system. It contained 4 independent ion chamber channels and 4 independent neutron detector channels. In addition to taking the individual data, it averaged the data over several runs and recorded the results along with the time and date on an output terminal.

In general, the portability of the electronics is a desirable feature of safeguards inspection equipment. Therefore, a small (29 x 13 x 33 cm) battery-operated electronics package that can be used with a neutron chamber and an ion chamber was developed. The package is shown in Fig. 14 and a block diagram is shown in Fig. 15. While this package has been used for single detector measurements of neutron and gamma fields, it can also be used with the ring detector when all four neutron channels and four I.C. channels are added. The ion chamber section converts the low level current signal to a voltage level which is amplified, digitized and displayed on the LCD display above the gain switch seen in Fig. 14. The neutron signal requires a preamplifier which can be powered from the box. The preamplified signal is amplified by a shaping amplifier in the electronics package. Those neutron pulses greater than a preset level are counted and displayed. The count time is selected (0-9999 s) using thumbwheel switches on the front panel and the count time remaining is shown by the display above the thumbwheel switches. This package weighs approximately 5 kg and operates for approximately 24 h with a set of 8 alkaline D-cell batteries.

SUMMARY

Nondestructive assay techniques are indispensible in the measurement of spent fuel both for safeguards verification and in-plant control. The characteristics of irradiated fuel that can be measured nondestructively are, among others:

1) the gamma activity from the fission products,
2) the neutron activity from the transuranics, and
3) the burnup profile or activity profile.

Any safeguards verification system for spent fuel assemblies should include both gamma-ray and neutron measurements. HGRS and neutron measurements coupled with axial scanning, either mechanically or through the multielement profile monitor, would give the most detailed information regarding the characteristics of spent fuel. For a simpler and faster safeguards system, a device similar to the ring counter might be able to provide sufficient detail to satisfy lower level verification requirements.

The application of nondestructive techniques for the verification of accountancy by national and international safeguards organizations is of primary importance, but it is

also of importance to the operator of the reprocessing facility to ensure the efficient and economic operation of the facility. In circumstances in which ownership of the fissile material is to be transferred from the reactor operator to the reprocessing facility, shipper-receiver differences could be resolved upon receipt of the material instead of waiting until analysis of the dissolver solution. This would also permit the facility operator the option of mixing fuels from different utilities to obtain specific plutonium and uranium isotopic compositions in the product materials.

Information supplied by nondestructive measurements can also be used to augment in-plant instrumentation for criticality control. The reprocessing facility operator would benefit from the nondestructive assay of fuel assemblies as they are received in the storage area, as well as a rapid verification of the assemblies prior to the transfer to the mechanical shearing cell.

REFERENCES

1. T. N. Dragnev, "Experimental Techniques for Measuring Burnup Nondestructive Techniques: Gamma Spectroscopy," International Atomic Energy Agency report IAEA/STR-48 (October 1974).

2. S. T. Hsue, T. W. Crane, W. L. Talbert, and J. C. Lee, "Nondestructive Assay Methods for Irradiated Fuels," Los Alamos Scientific Laboratory report LA-6923 (January 1978).

3. S. T. Hsue, "Methods for the Nondestructive Assay of Irradiated Fuels for Safeguards," Atomic Energy Review 16, No. 1, 89-128 (1978).

4. "Advisory Group Meeting on the Nondestructive Analysis of Irradiated Power Reactor Fuel," International Atomic Energy Agency report AG-11 (April 1977).

5. S. T. Hsue, J. E. Stewart, K. Kaieda, J. K. Halbig, J. R. Phillips, D. M. Lee, and C. R. Hatcher, "Passive Neutron Assay of Irradiated Nuclear Fuels," Los Alamos Scientific Laboratory report LA-7645-MS (ISPO 43) (February 1979).

6. D. M. Lee, J. R. Phillips, S. T. Hsue, K. Kaieda, J. K. Halbig, E. G. Medina, and C. R. Hatcher, "A New Approach to the Examination of LWR Irradiated Fuel Assemblies Using Simple Gas Chamber Techniques," Los Alamos Scientific Laboratory report LA-7655-MS (ISPO 48) (March 1979).

7. J. R. Phillips, D. M. Lee, T. R. Bement, J. K. Halbig, S. T. Hsue, and K. Kaieda, "Nondestructive Examination of Irradiated LWR Fuel Assemblies," Proc. INMM 20th Annual Meeting, Albuquerque, New Mexico, July 16-19, 1979.

8. D. M. Lee, J. R. Phillips, S. T. Hsue, K. Kaieda, J. K. Halbig, E. G. Medina, and C. R. Hatcher, "A Quick and Accurate Profile Monitor for Irradiated Fuel," Proc. 1st ESARDA Symp. on Safeguards and Nucl. Mat. Management, pp. 265-269, Mol, Belgium, April 25 and 26, 1978.

9. J. R. Phillips, S. T. Hsue, K. Kaieda, D. M. Lee, J. K. Halbig, E. G. Medina, C. R. Hatcher, and T. R. Bement, "Nondestructive Determination of Burnup and Cooling Times of Irradiated Fuel Assemblies," Proc. 1st ESARDA Symp. of Safeguards and Nucl. Mat. Management, pp. 270-276, Mol, Belgium, April 25 and 26, 1978.

10. E. Dermendjiev, private communication, International Atomic Energy Agency (1978).

11. S. Glasstone and A. Sesonske, Nuclear Reactor Engineering, D. Van Nostrand Company, Inc., Princeton, New Jersey (1963).

Figure Captions

Figure 1
Schematic of experimental apparatus used to examine the LWR fuel assemblies.

Figure 2
Be(γ,n) detector for measuring the high-energy ($>$1660 keV) gamma activity profile.

Figure 3
Correlation of the measured ^{137}Cs activities with the declared burnup values.

Figure 4
Typical BWR irradiated fuel assembly profile. Burnup is 4356 MWD/t and cooling time is 17 months.

Figure 5
Typical BWR irradiated fuel assembly profile. Burnup is 18804 MWD/t and cooling time is 10 months.

Figure 6
Typical PWR irradiated fuel assembly profile. Burnup is 17776 MWD/t and cooling time is 15 months.

Figure 7
Typical PWR irradiated fuel assembly profile. Burnup is 31851 MWD/t and cooling time is 9 months.

Figure 8
Photograph of a multielement ion chamber for obtaining the axial gross-gamma profiles of irradiated MTR fuel elements.

Figure 9
Block diagram of the microprocessor-based portable electronics for the multi-element profile monitor.

Figure 10
Photograph of the multielement profile monitor electronics.

Figure 11
The 'ring' detector. The active elements are shown outside of the waterproof enclosure.

Figure 12
Plot of neutron count rate vs declared burnup.

Figure 13
Plot of gamma response/burnup vs cooling time.

Figure 14
Photograph of battery-powered neutron and gamma-ray electronics.

Figure 15
Functional schematic of the battery-powered electronics.

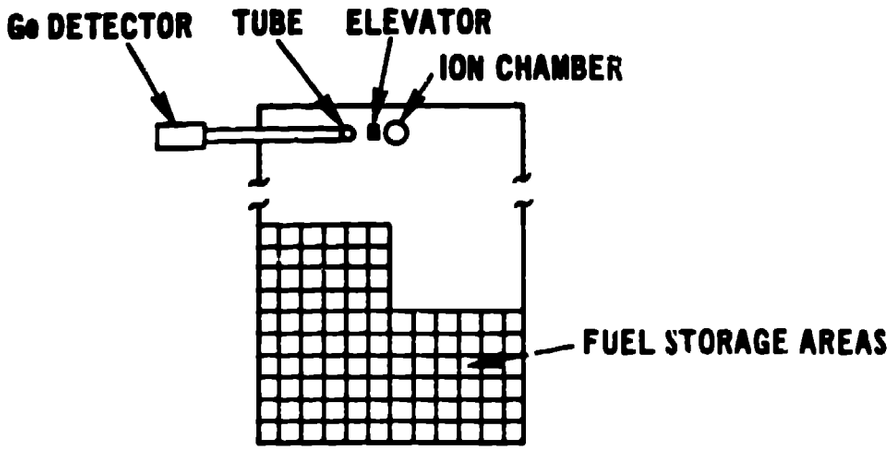
Ge DETECTOR
TUBE
ELEVATOR
ION CHAMBER
FUEL STORAGE AREAS

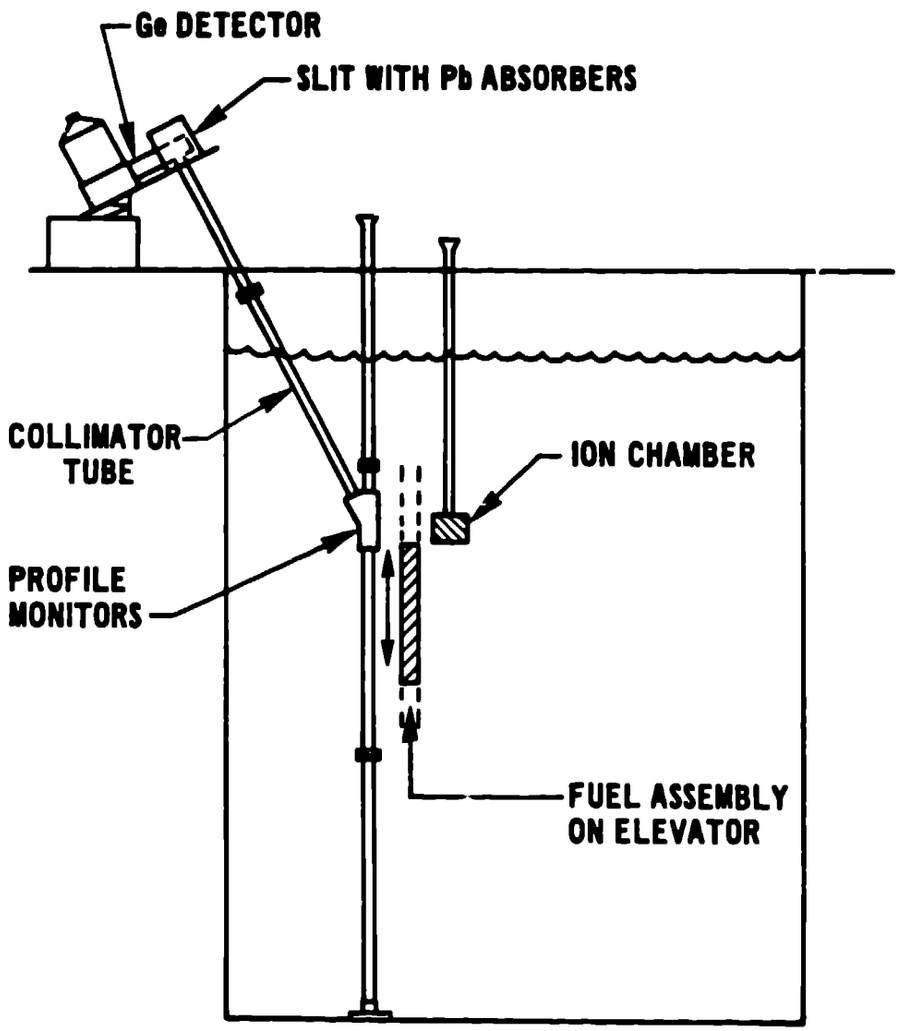
Ge DETECTOR
SLIT WITH Pb ABSORBERS
COLLIMATOR TUBE
ION CHAMBER
PROFILE MONITORS
FUEL ASSEMBLY ON ELEVATOR

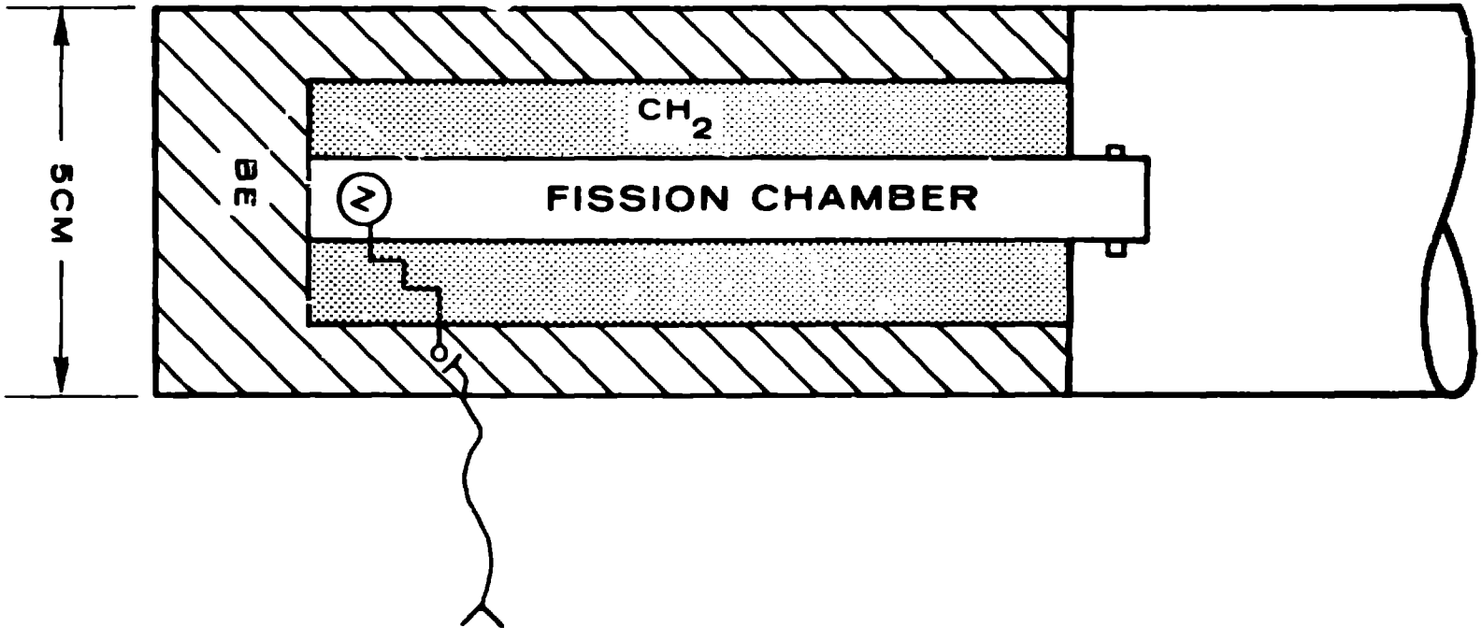
5CM
BE
CH_2
FISSION CHAMBER

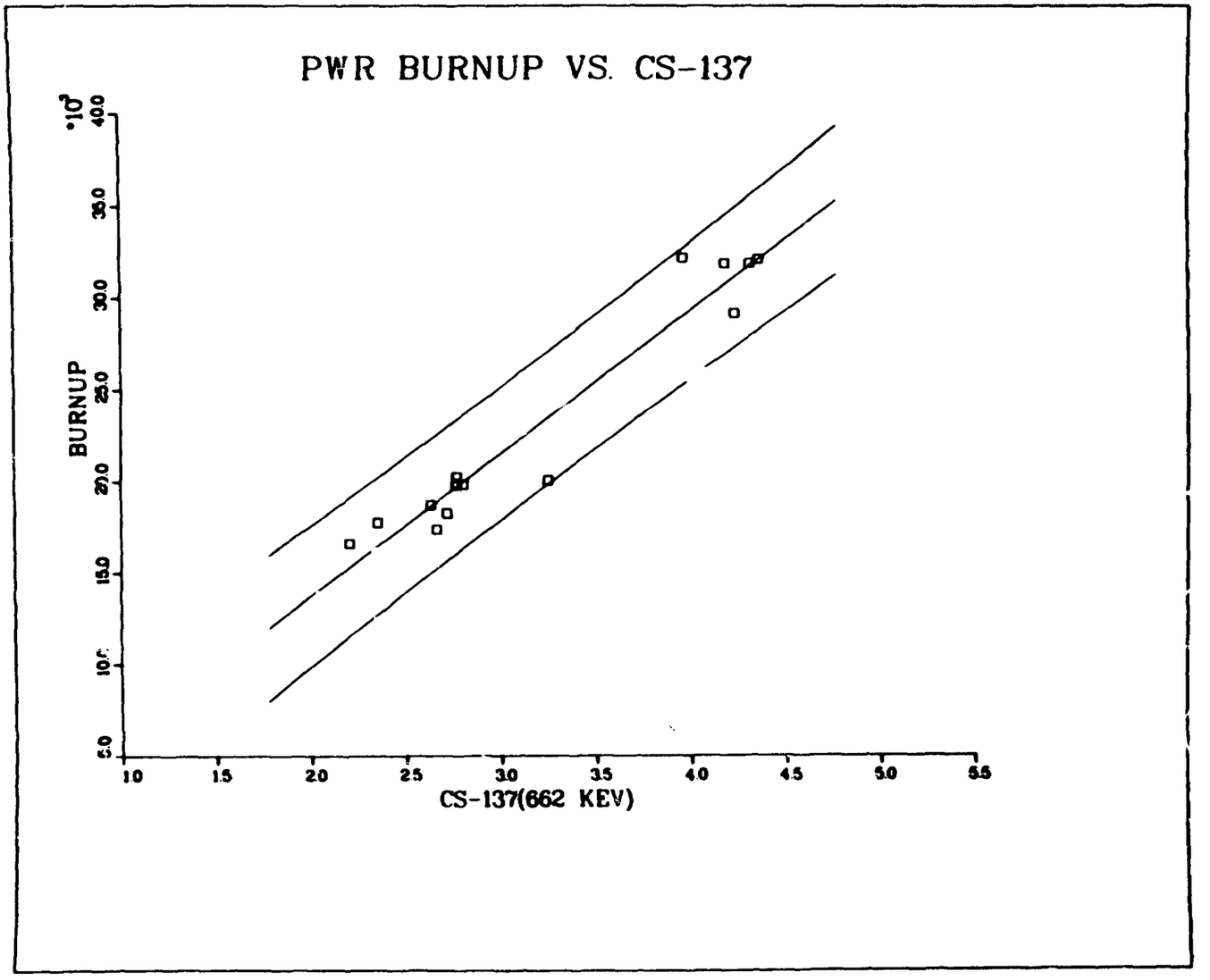
PWR BURNUP VS. CS-137
BURNUP
*10³
40.0
35.0
30.0
25.0
20.0
15.0
10.0
5.0
1.0
1.5
2.0
2.5
3.0
3.5
4.0
4.5
5.0
5.5
CS-137(662 KEV)

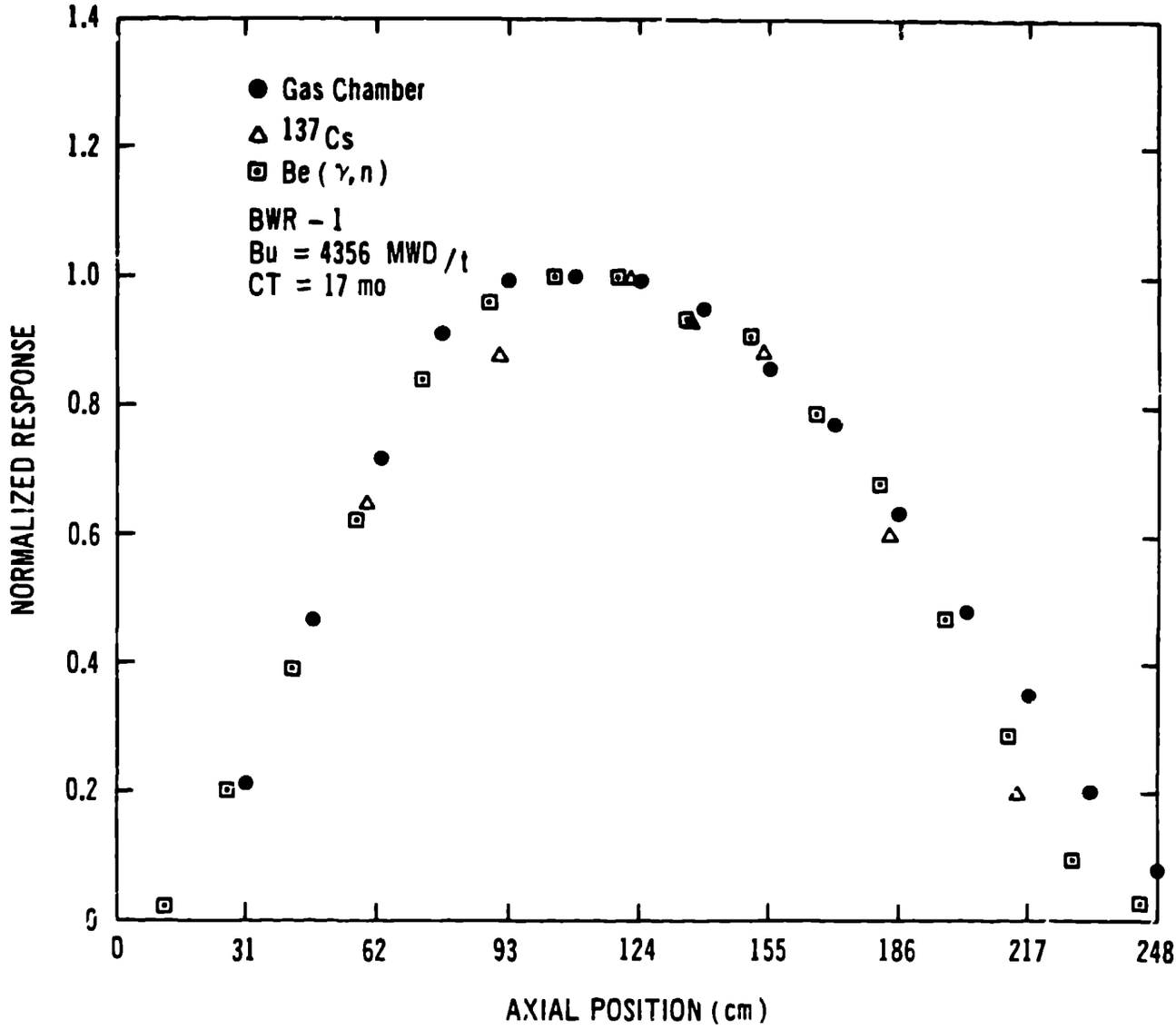
Gas Chamber
137Cs
Be (γ,n)
BWR - 1
Bu = 4356 MWD/t
CT = 17 mo
NORMALIZED RESPONSE
AXIAL POSITION (cm)
0
0.2
0.4
0.6
0.8
1.0
1.2
1.4
0
31
62
93
124
155
186
217
248

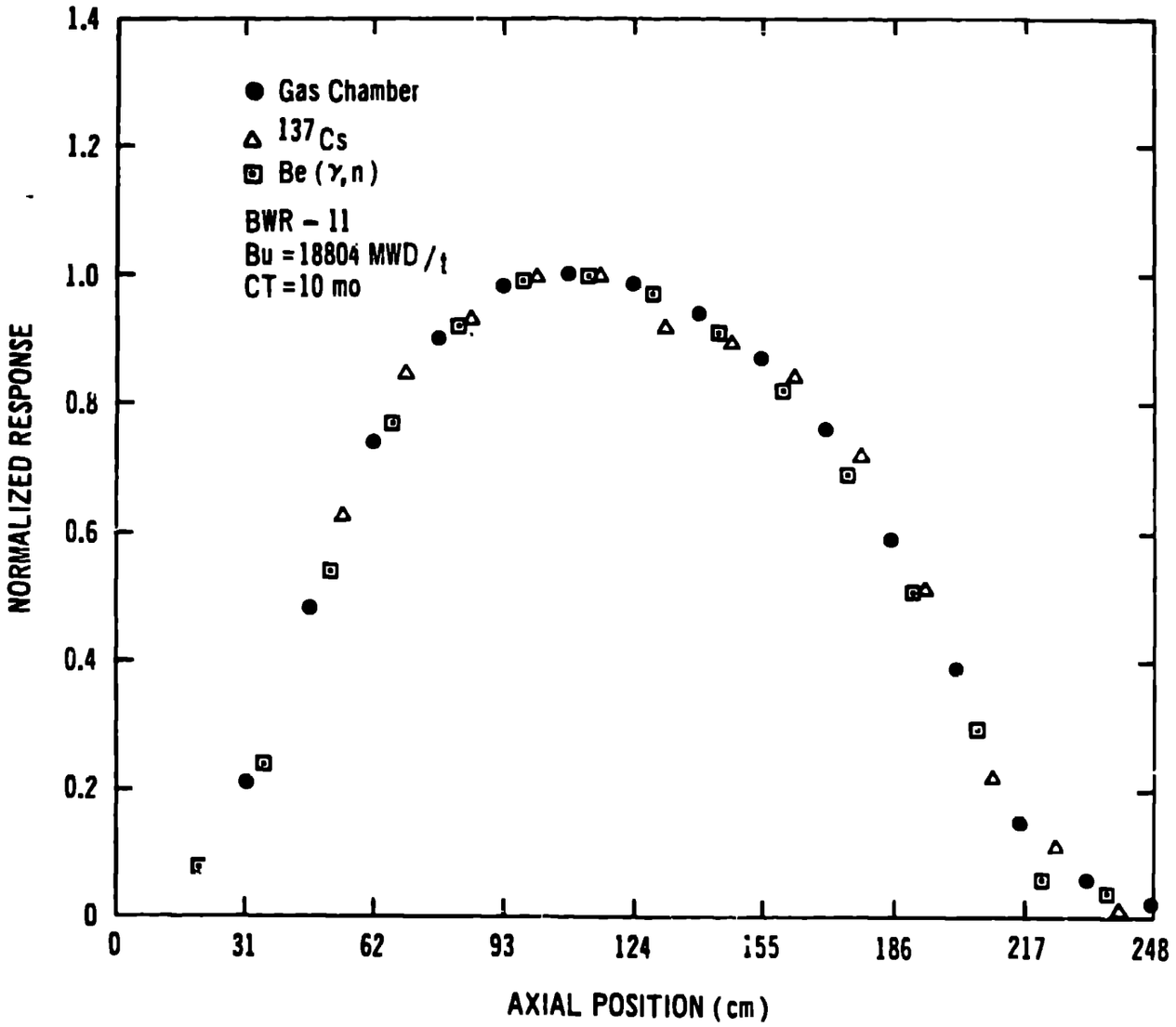
Gas Chamber
137Cs
Be (γ,n)
BWR – 11
Bu = 18804 MWD/t
CT = 10 mo
NORMALIZED RESPONSE
AXIAL POSITION (cm)
0
0.2
0.4
0.6
0.8
1.0
1.2
1.4
0
31
62
93
124
155
186
217
248

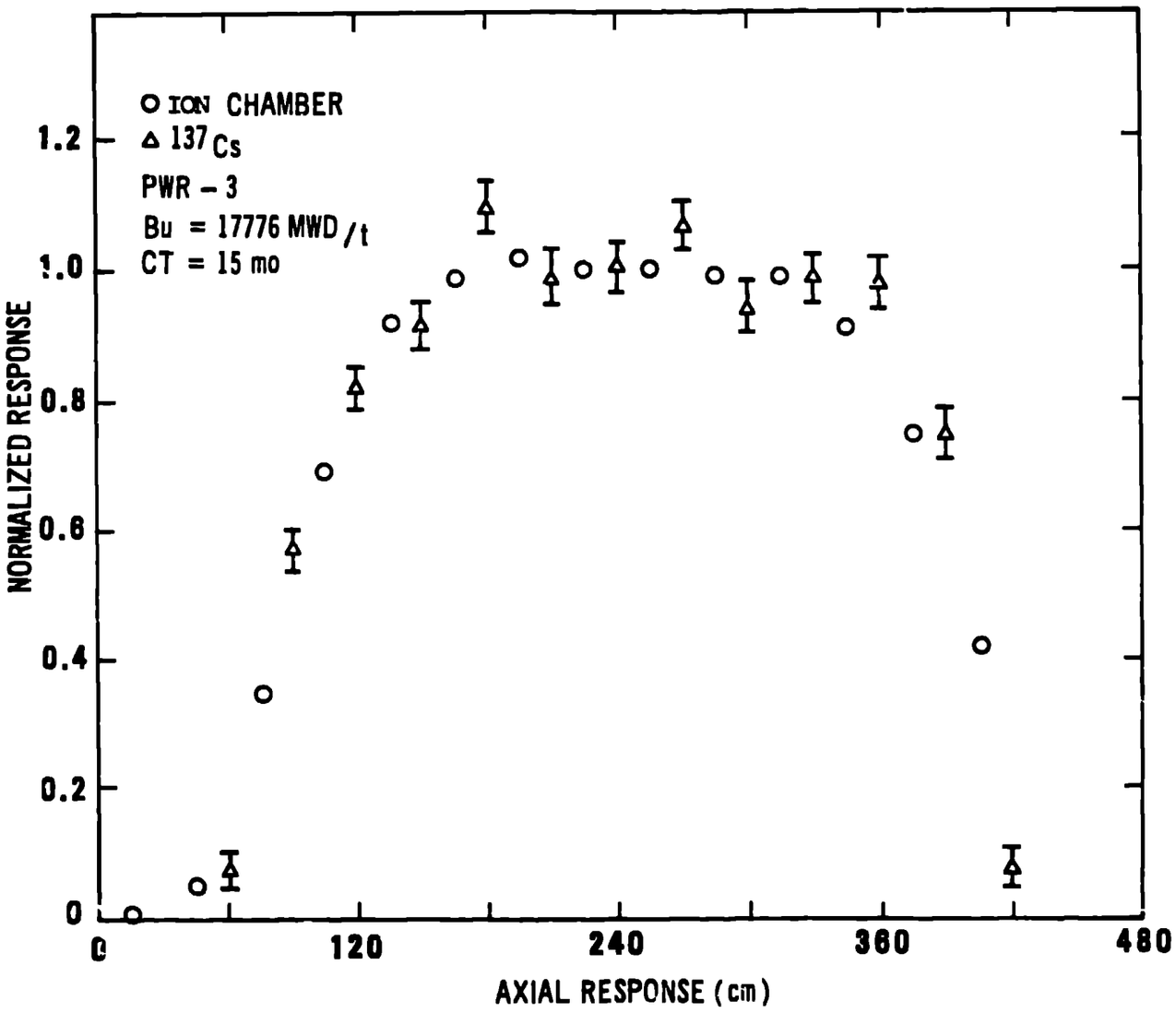
O ION CHAMBER
Δ 137Cs
PWR – 3
Bu = 17776 MWD/t
CT = 15 mo
NORMALIZED RESPONSE
1.2
1.0
0.8
0.6
0.4
0.2
0
0
120
240
360
480
AXIAL RESPONSE (cm)

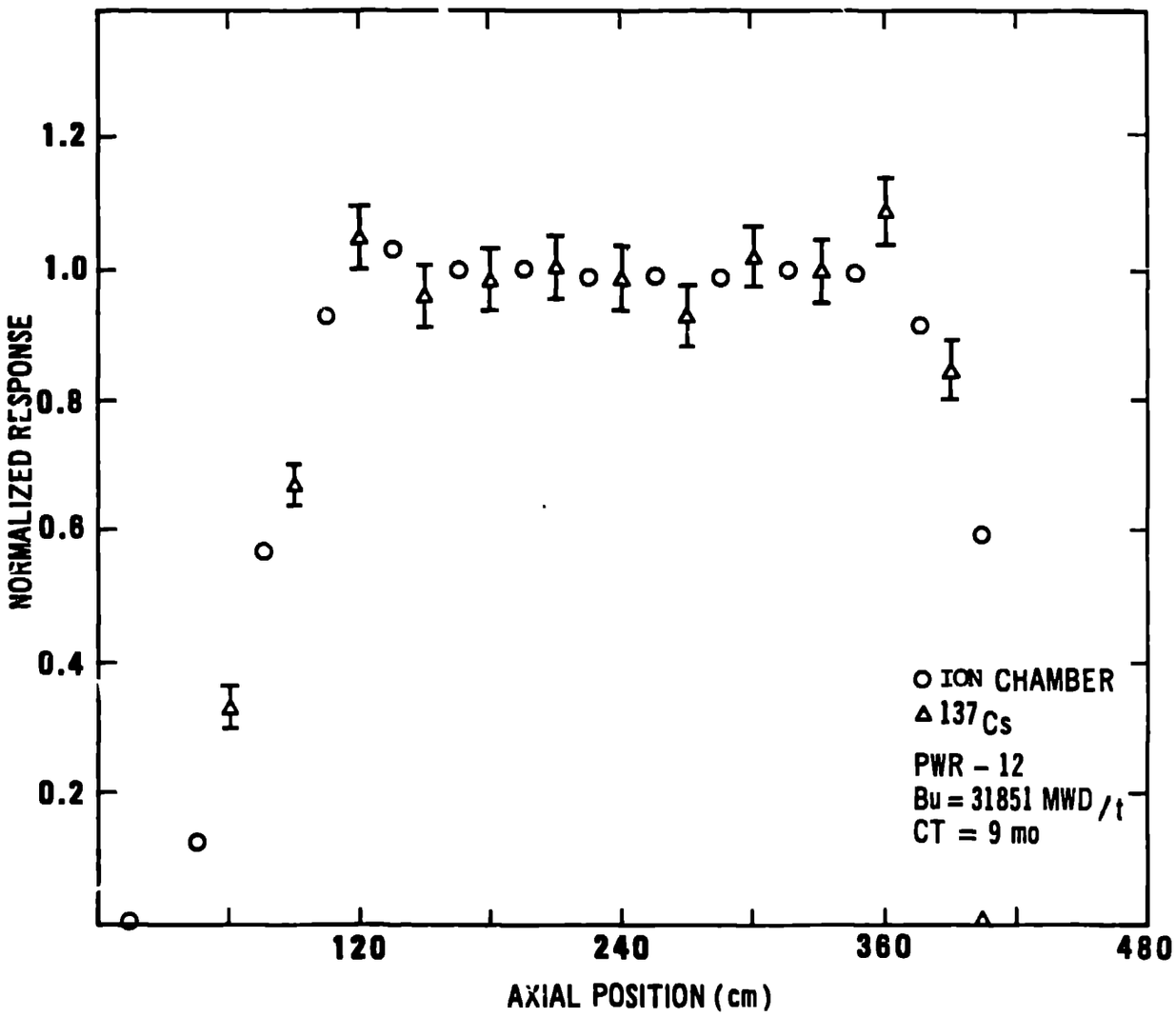
1.2
1.0
0.8
0.6
0.4
0.2
NORMALIZED RESPONSE
120
240
360
480
AXIAL POSITION (cm)
O ION CHAMBER
Δ 137Cs
PWR - 12
Bu = 31851 MWD/t
CT = 9 mo

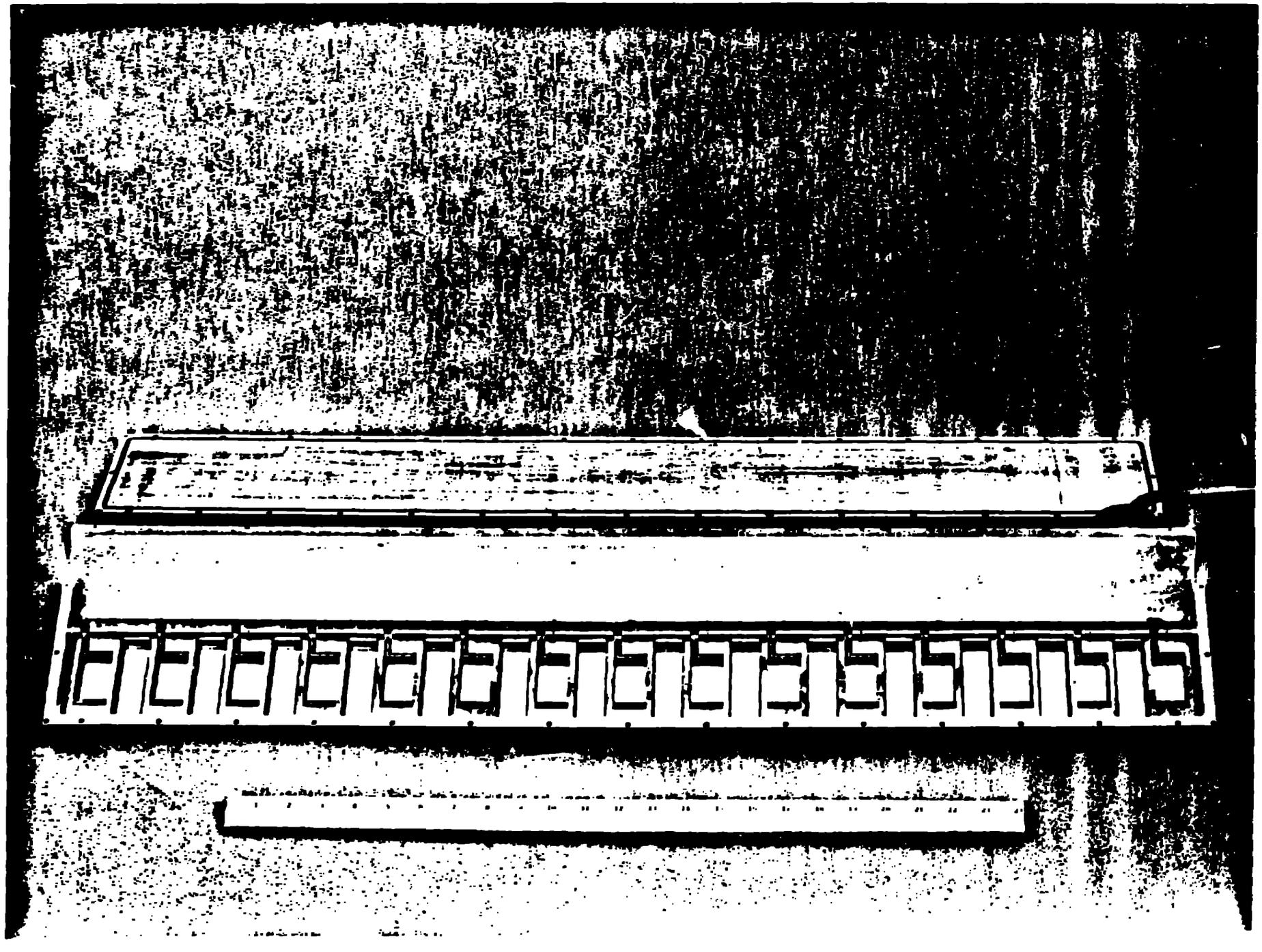

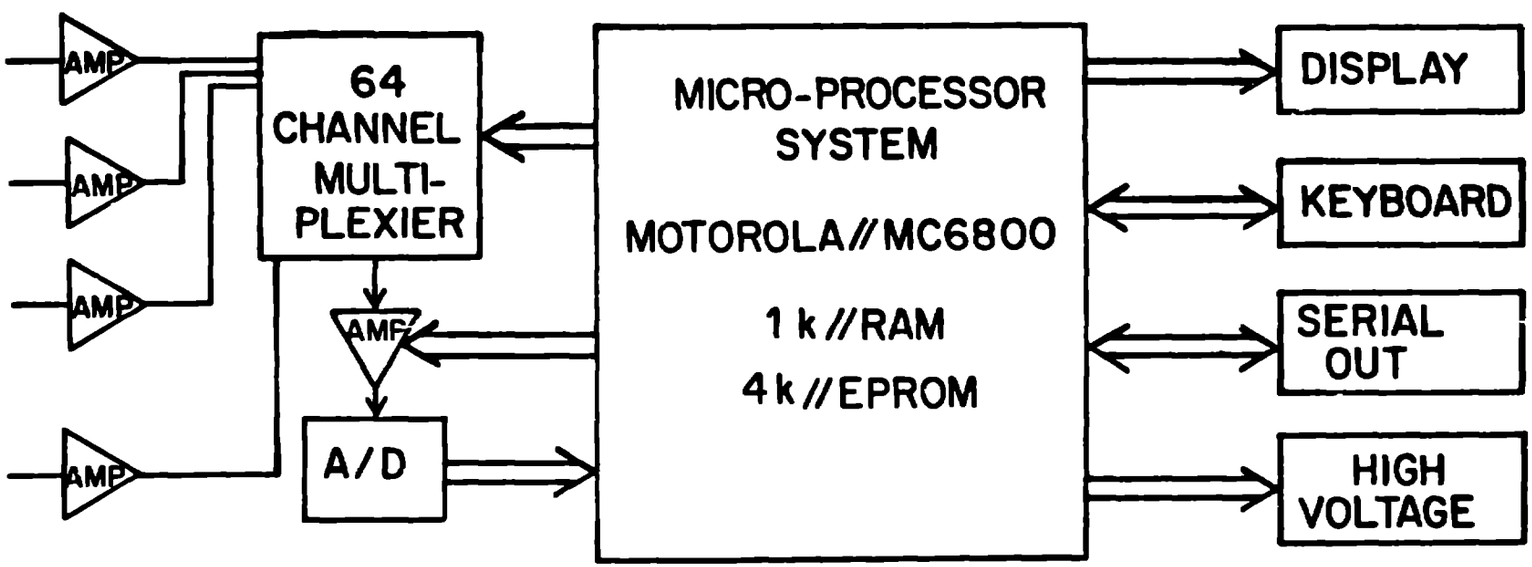
AMP
AMP
AMP
AMP
64 CHANNEL MULTI-PLEXIER
AMP
A/D
MICRO-PROCESSOR SYSTEM
MOTOROLA//MC6800
1 k//RAM
4 k//EPROM
DISPLAY
KEYBOARD
SERIAL OUT
HIGH VOLTAGE

LCS

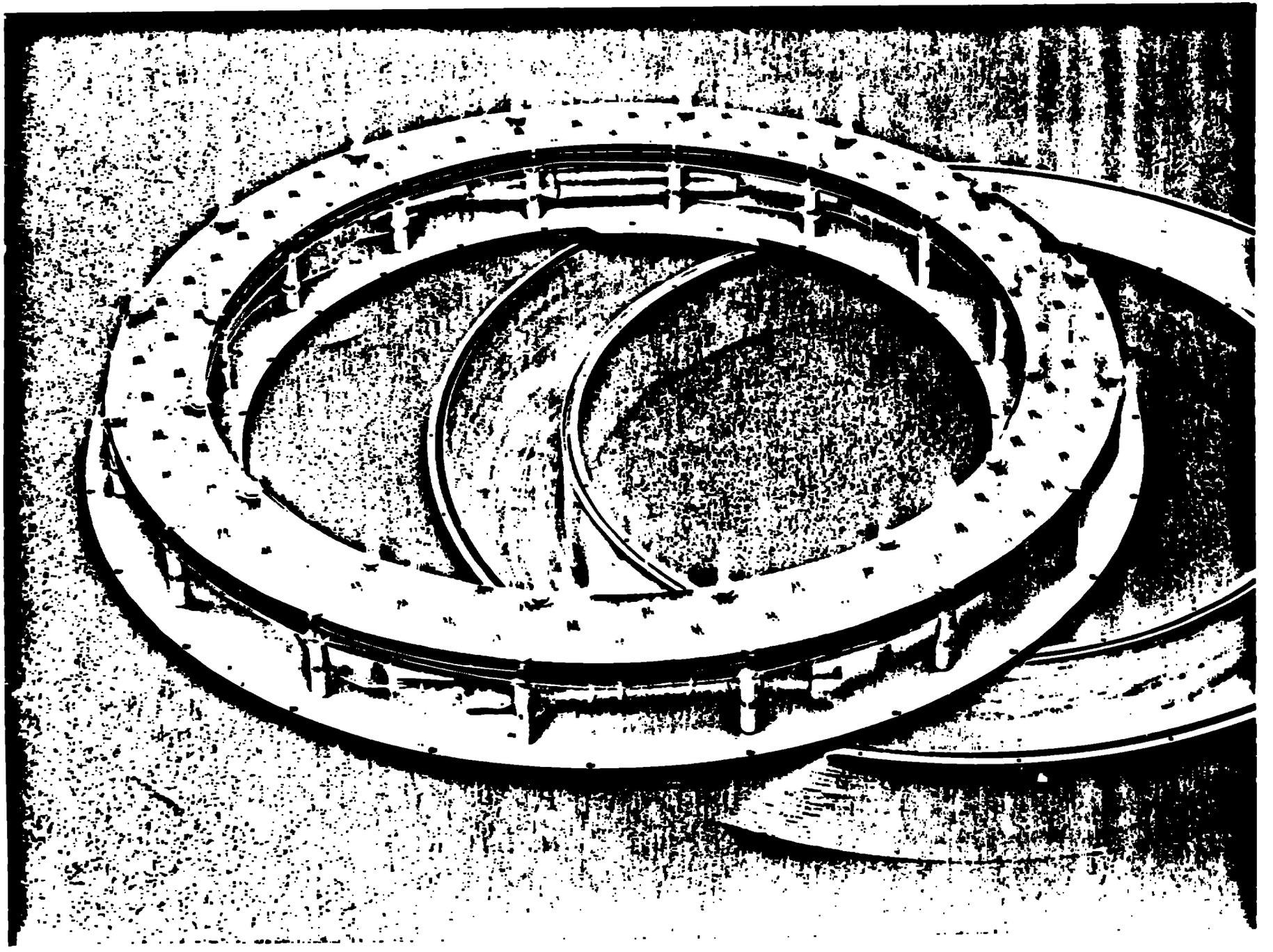

BLANK PAGE

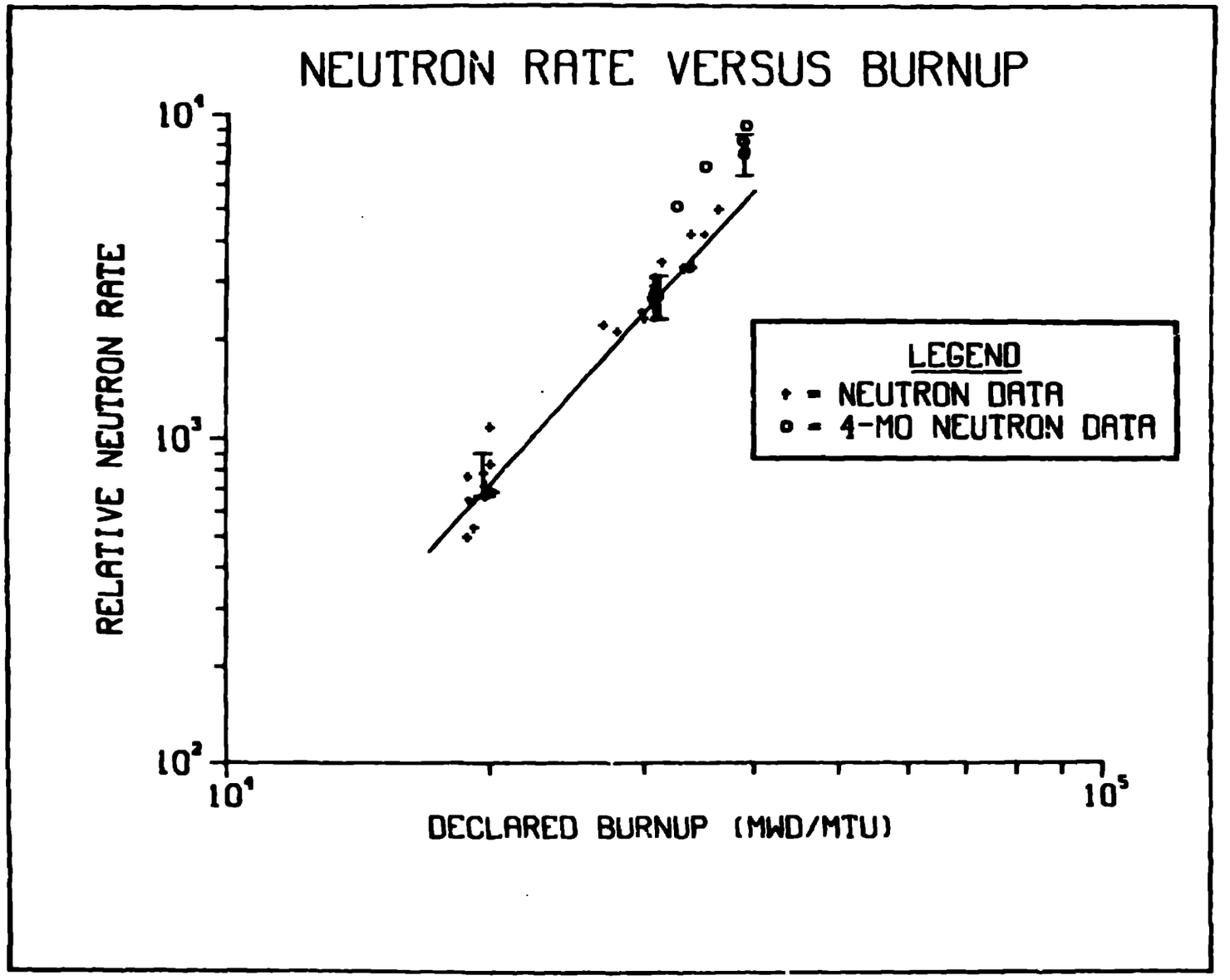
NEUTRON RATE VERSUS BURNUP
RELATIVE NEUTRON RATE
10^4
10^3
10^2
10^4
10^5
DECLARED BURNUP (MWD/MTU)
LEGEND
+ = NEUTRON DATA
o = 4-MO NEUTRON DATA

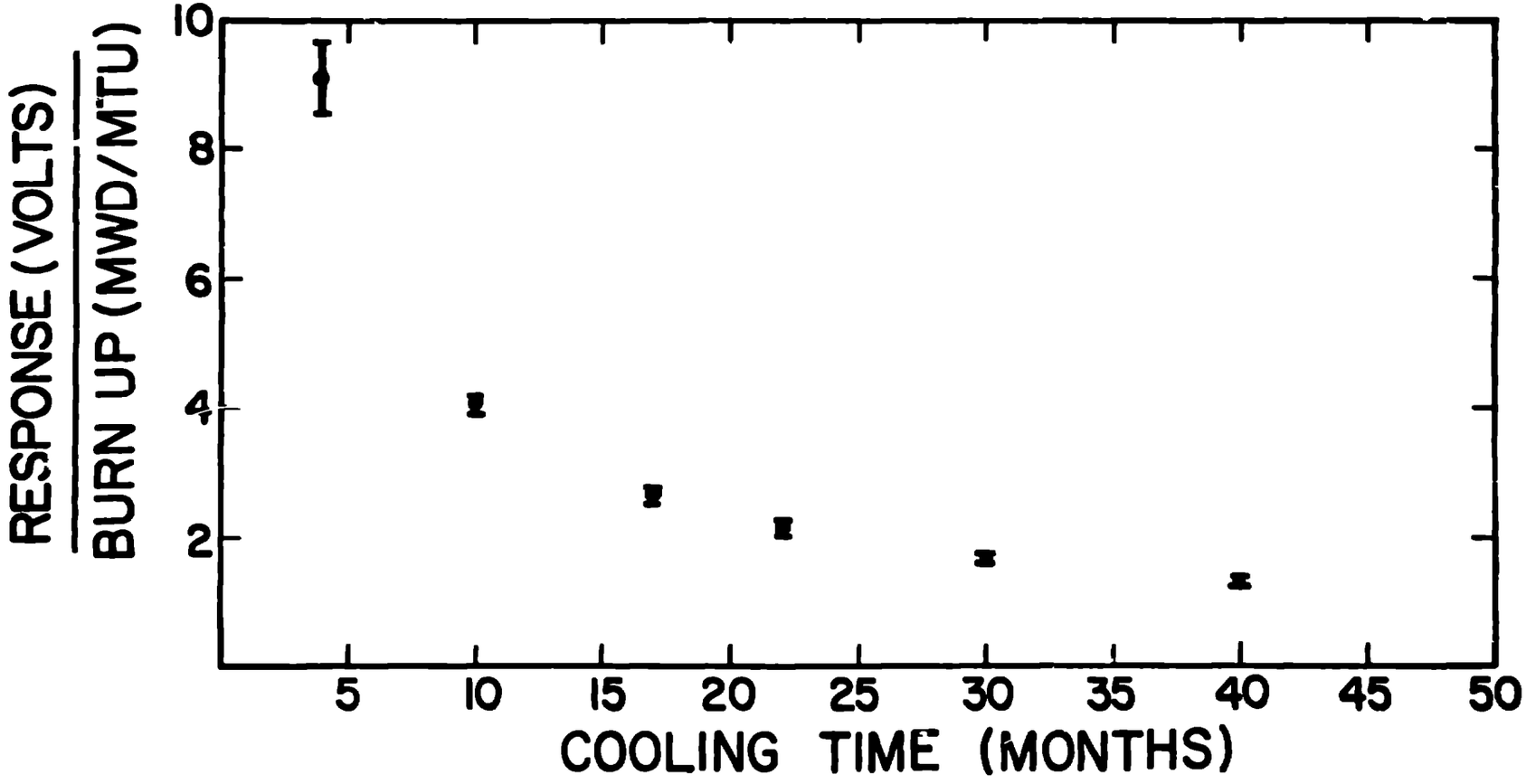
RESPONSE (VOLTS) / BURN UP (MWD/MTU)
10
8
6
4
2
5
10
15
20
25
30
35
40
45
50
COOLING TIME (MONTHS)

TIME REMAINING
FISSION CHAMBER COUNTS
ION CHAMBER CURRENT
0 0 0 0
SET COUNTING TIME
ART
OP
SET
1
10
100
GAIN

BLANK PAGE

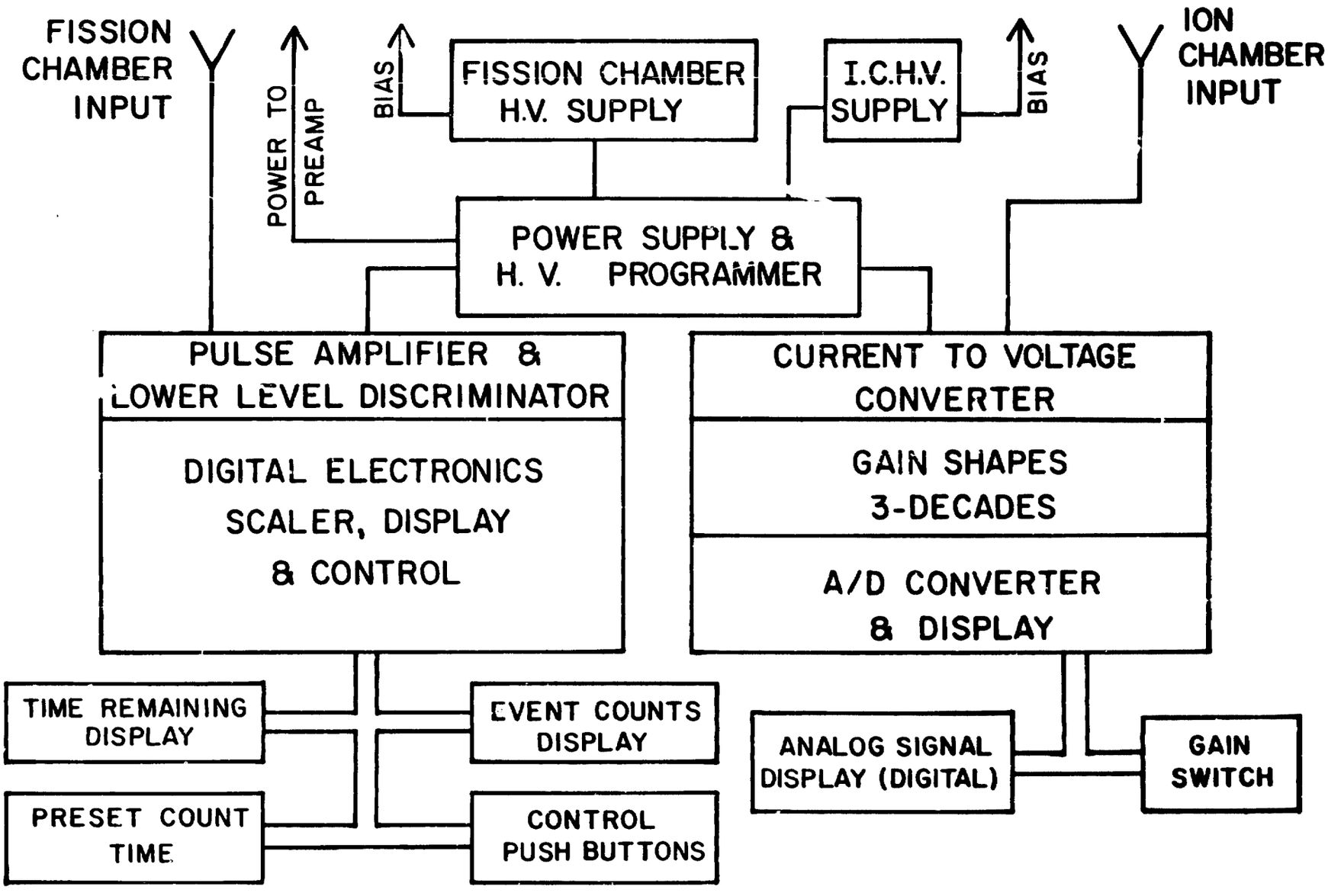
FISSION CHAMBER INPUT
POWER TO PREAMP
BIAS
FISSION CHAMBER H.V. SUPPLY
I.C.H.V. SUPPLY
BIAS
ION CHAMBER INPUT
POWER SUPPLY & H. V. PROGRAMMER
PULSE AMPLIFIER & LOWER LEVEL DISCRIMINATOR
DIGITAL ELECTRONICS SCALER, DISPLAY & CONTROL
CURRENT TO VOLTAGE CONVERTER
GAIN SHAPES 3-DECADES
A/D CONVERTER & DISPLAY
TIME REMAINING DISPLAY
EVENT COUNTS DISPLAY
PRESET COUNT TIME
CONTROL PUSH BUTTONS
ANALOG SIGNAL DISPLAY (DIGITAL)
GAIN SWITCH