[redacted]

[redacted]

Preprint LA-UR-80-692

C.1

Title: USDOE RADIOACTIVE WASTE INCINERATION TECHNOLOGY: STATUS REVIEW

Author(s): Leon C. Borduin
Anibal L. Taboas

Submitted to: Waste Management '80
Tucson, AZ
March 11, 1980

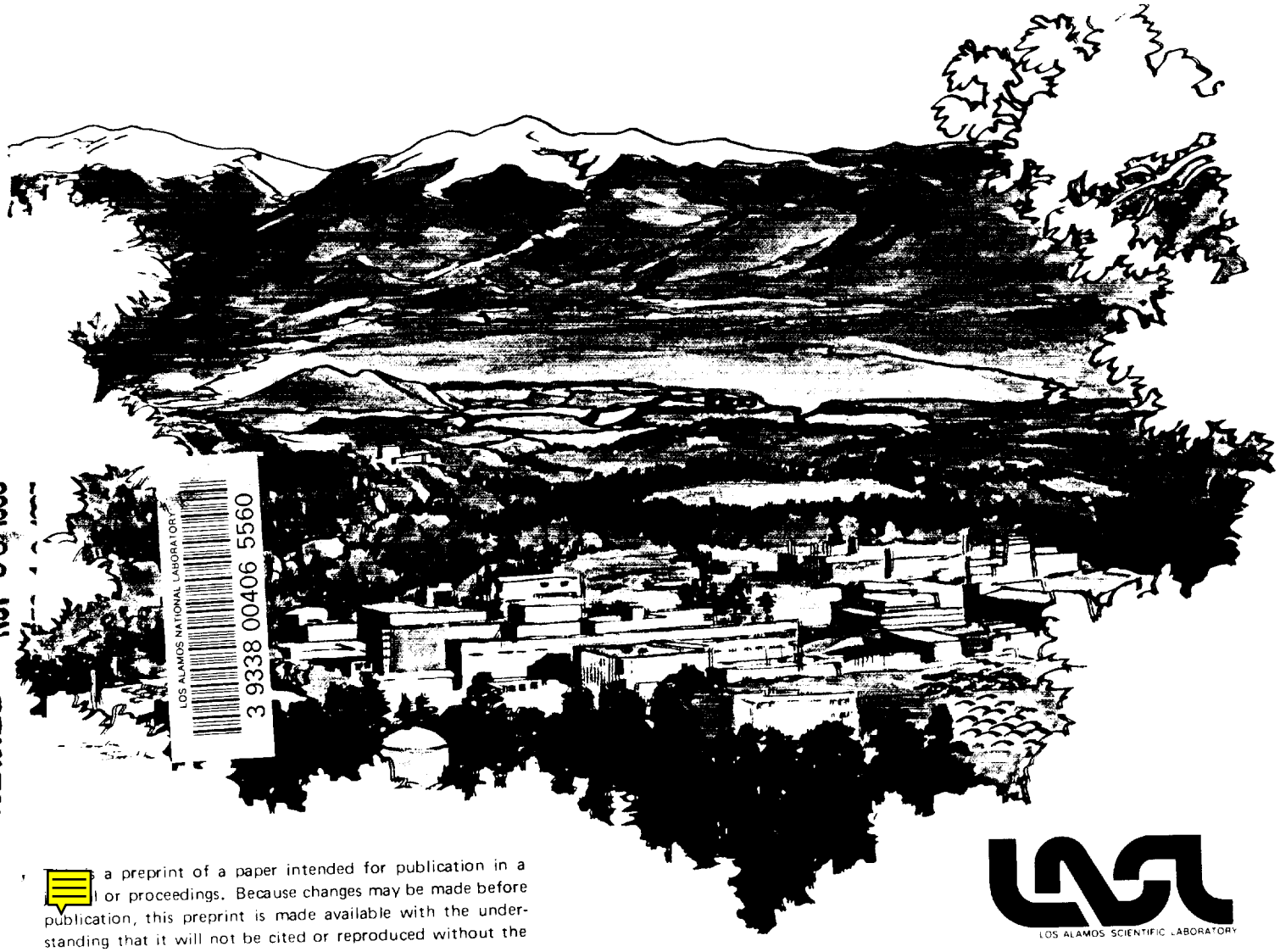

SCANNED NOV 08 1996

LOS ALAMOS NATIONAL LABORATORY
3 9338 00406 5560

This is a preprint of a paper intended for publication in a journal or proceedings. Because changes may be made before publication, this preprint is made available with the understanding that it will not be cited or reproduced without the permission of the author.

LOS ALAMOS SCIENTIFIC LABORATORY

USDOE RADIOACTIVE WASTE INCINERATION TECHNOLOGY: STATUS REVIEW

Leon C. Borduin
Los Alamos Scientific Laboratory
Los Alamos, NM

Anibal L. Taboas
US Department of Energy
Albuquerque, NM

ABSTRACT

The current inventory of radioactive waste from the defense and commercial industries is $\sim 2 \times 10^6$ m^3 and increases $\sim 10^5$ m^3/yr due to current operations. Most of this waste can be classified as combustibles, liquids and sludges, or as non-combustible solids. The very substantial combustible fraction, which has the greatest potential for effective waste treatment, constitutes an average of 40% of the newly generated waste. Proper incineration reduces waste mass and volume and results in a more homogeneous and chemically inert waste form that can usually be disposed where the original waste form could not. Further, incineration significantly enhances the safety and certainty of waste handling, packaging, storage, and/or disposal operations.

Early attempts to incinerate radioactive wastes met with operation and equipment problems such as feed preparation, corrosion, inadequate off-gas cleanup, incomplete combustion, and isotope containment. The US Department of Energy (DOE) continues to sponsor research, development, and the eventual demonstration of radioactive waste incineration. In addition, several industries are developing proprietary incineration system designs to meet other specific radwaste processing requirements. Although development efforts continue, significant results are available for the nuclear community and the general public to draw on in planning.

This paper presents an introduction to incineration concerns, and an overview of the prominent radwaste incineration processes being developed within DOE. Brief process descriptions, status and goals of individual incineration systems, and planned or potential applications are also included.

LOS ALAMOS NATL. LAB. LIBS.
3 9338 00406 5560
SCANNED NOV 08 1990

USDOE RADIOACTIVE WASTE INCINERATION TECHNOLOGY: STATUS REVIEW

Leon C. Borduin
Los Alamos Scientific Laboratory
Los Alamos, NM

Anibal L. Taboas
US Department of Energy
Albuquerque, NM

ABSTRACT

The current inventory of radioactive waste from the defense and commercial industries is $\sim 2 \times 10^6$ m^3 and increases $\sim 10^5$ m^3/yr due to current operations. Most of this waste can be classified as combustibles, liquids and sludges, or as non-combustible solids. The very substantial combustible fraction, which has the greatest potential for effective waste treatment, constitutes an average of 40% of the newly generated waste. Proper incineration reduces waste mass and volume and results in a more homogeneous and chemically inert waste form that can usually be disposed where the original waste form could not. Further, incineration significantly enhances the safety and certainty of waste handling, packaging, storage, and/or disposal operations.

Early attempts to incinerate radioactive wastes met with operation and equipment problems such as feed preparation, corrosion, inadequate off-gas cleanup, incomplete combustion, and isotope containment. The US Department of Energy (DOE) continues to sponsor research, development, and the eventual demonstration of radioactive waste incineration. In addition, several industries are developing proprietary incineration system designs to meet other specific radwaste processing requirements. Although development efforts continue, significant results are available for the nuclear community and the general public to draw on in planning.

This paper presents an introduction to incineration concerns, and an overview of the prominent radwaste incineration processes being developed within DOE. Brief process descriptions, status and goals of individual incineration systems, and planned or potential applications are also included.

ACKNOWLEDGEMENTS

This paper summarizes results of a survey of USDOE-funded radioactive waste incineration development. Much of the technical content and many illustrations were obtained through direct communication with contracting organization personnel. The assistance of the following individuals is gratefully acknowledged: C. R. Allen (Hanford Engineering Development Laboratory), H. Hootman (Savannah River Laboratory), K. V. Gilbert (Mound Facility), G. Levin and J. Thompson (EG&G Idaho, Inc.), L. Penberthy (Penberthy Electromelt Int'l, Inc.), and D. L. Ziegler (Rocky Flats Plant).

Typical examples of the four main physical forms of the waste are:

a) liquids - scintillation fluid, solutions from laundry, decontamination and acid etching, biological cultures, scrubber fluids, water, oil, grease, and radiopharmaceuticals.

b) solid absorbed liquids - filter sludges, evaporator bottoms, spent resins, demineralizer regenerant, and animal carcasses.

c) dry combustibles or compactible solids - paper, plastics (polyvinyl chloride [PVC], polyethylene, polypropylene, etc.), rubber, cellulosics, organic resins, filters and detectors.

d) dry noncombustibles or noncompactible solids - cartridge filters, small tools, irradiated components, glassware, shielding materials, piping, pumps, gloveboxes, pacemakers, and surplus facilities.

Depending on the source of waste, combustibles range from 20 to 90% of the waste volume and have an average of greater than 50% of all LLW and TRU combined. Organic materials may produce hazards ranging from the ignition of solids to explosive and potentially corrosive mixtures from gas generation. Gas generation results from bacterial decomposition, hydrolysis, and corrosion, and to a lesser extent from decay of alpha particles.

Effective incineration completely eliminates organic hazards. Other benefits are the destruction of many toxic chemicals, volume and mass reduction, and a resulting inert waste form which is uniformly compatible with recovery, immobilization, and disposal.

Each major waste composition imposes specific requirements on the incineration system, and tradeoffs must be made. Some considerations are: a) nature and specific activity of the waste (i.e., feed preparation - sorting and crushing, Pu-238 vs Pu-239); b) required processing throughput for eliminating waste inventories and for criticality control; c) net volume and mass reduction, including secondary waste generation from

decontamination of facility, off-gas, and from additives for immobilization; d) off-gas system removal of airborne particulates (ash carryover) and toxic gaseous radioisotopes; e) instrumentation and control system for accountability assurance of complete combustion; and f) possible remote handling and maintenance. Incomplete combustion may result in excess generation of HCl, H_2S, CO, CH_4, C_2H_2, C_2H_4, C_6H_6, C_7H_8, and HCN. Local conditions may influence the effectiveness of an incinerator such as the compatibility with downstream processes, desired end-product characteristics, flexibility, and available resources.

Early attempts[1,2] to incinerate radioactive wastes met with operational and equipment problems such as feed preparation, corrosion, inadequate off-gas cleanup, incomplete combustion, and isotope containment. The US Department of Energy (DOE) continues to sponsor research, development, and demonstration of radioactive waste incineration. In addition, several industries are developing proprietary incineration system designs to meet other specific radwaste processing requirements. Although development efforts continue, significant results are available for the nuclear community and the general public to draw on in planning.

This paper presents an introduction to incineration concerns, and an overview of the prominent radwaste incineration processes being developed within DOE. Brief process descriptions, status and goals of individual incineration systems, and planned or potential applications are also included.

ACID DIGESTION PROCESS

In the early 1960's, a chemical system using selenium-catalyzed sulfuric acid (H_2SO_4) for wet oxidation of combustible wastes was tested in pilot plant equipment at Riso, Denmark. Substitution of nitric acid (HNO_3) as the oxidant in place of the selenium catalyst was first investigated at HEDL in early 1971. Initial laboratory tests using a combination of hot concentrated H_2SO_4 and HNO_3 showed that a wide variety of potential waste materials were readily decomposed. The sulfuric acid serves primarily to carbonize the wastes and to provide a high temperature medium (250°C) for the subsequent

oxidation of the carbonized waste by HNO_3. In 1975, HEDL initiated an acid digestion development/demonstration project for the treatment of transuranic combustible wastes.[3]

Process Description

In the acid digestion process, shredded combustible wastes are added continuously to a simmering H_2SO_4/HNO_3 solution (~91 wt.% H_2SO_4 at 250°C). The acids convert the waste to a low volume, nonreactive solid plus water vapor and CO_2. Low-level radioactive waste materials typical of the nuclear industry have been processed in glass-lined equipment at rates as high as 4 kg/hr. The process is readily controlled by adjusting the HNO_3 or waste addition rates. Criticality control is attained by use of geometrically favorable equipment and administrative control.

In the present system (Fig. 1) shredded waste is fed incrementally into the heated digester vessel annulus where it is contacted with HNO_3 and H_2SO_4. The acid slurry is transferred to the annular heating vessel where additional digestion occurs and is then returned to the digester vessel via an air-lift circulator. Solids which accumulate in the system are periodically transferred to evaporator pots, from which H_2SO_4 is evaporated at 350°C and returned to the digester for reuse. The resulting dry powder product is composed primarily of inorganic sulfates and oxides and is thermally stable when heated in air. Plutonium remains with the process residue.

Off-gases leaving the digester consist primarily of H_2O, CO_2, CO, SO_3, NO_2, NO, N_2O, N_2, and HCl. Nitrogen dioxide (NO_2) readily oxidizes SO_2 to SO_3, and addition of O_2 from air to the off-gas is used to convert NO to NO_2. NO_2, SO_3, and HCL are readily stripped from the off-gases using a dilute acid scrub. Spent scrub acid is concentrated, fractionated, and the recovered sulfuric and nitric acids are returned to the digester. Water, HCl, and a small amount of NO_x are released to the off-gas stream from this operation. The nitrogen converted from HNO_3 during digestion (about 30% of the input) also exits via the off-gas train.

Status and Goals

Engineering feasibility of the acid digestion process has been demonstrated during a 6-month campaign in which 2100 kg of low activity TRU waste were processed in a 3 kg/hr radioactive pilot plant test facility. A 10 kg/hr unit for treating radioactive wastes has been installed and tested and will begin processing plutonium-contaminated wastes in the first quarter of 1980.

The higher rate digestion facility will be used to demonstrate reliability by processing both low activity TRU and high plutonium activity wastes from production and from decommissioning. In addition, the ability to process special waste and scrap forms such as ion exchange resins, liquids, and sludges will be evaluated. Testing of other special waste forms will also be performed as the need arises.

Application of this process to waste streams other than TRU (i.e., beta gamma waste, reactor waste, etc.) is being investigated on an international basis and HEDL is cooperating with a number of foreign countries in an effort to foster a coordinated cooperative development and to minimize costs. An international workshop on acid digestion development, sponsored by OECD, will be held in Richland in October 1980 with participants from the United Kingdom, Germany, France, Switzerland, the Netherlands, and Japan.

CONTROLLED-AIR INCINERATION (CAI)

Controlled-air systems use the concept of multiple-chamber burning to achieve complete waste combustion. Wastes are charged to the first chamber where they burn at near stoichiometric conditions. Products of partial oxidation and volatilization flow into secondary heated chamber(s) where excess air conditions provide complete combustion. This mode of operation produces a nonturbulent combustion environment which minimizes entrainment of fly ash. Three DOE incineration studies, a demonstration project at Los Alamos Scientific Laboratory (LASL) and two units at Savannah River Laboratory (SRL), are based on the controlled-air concept.

CAI Demonstration (LASL)[4,5]

In 1973, LASL was directed to evaluate current incineration and off-gas treatment technology for combustion of as-generated TRU wastes. A controlled-air incinerator coupled with high-energy aqueous off-gas cleanup equipment was selected for development and engineering demonstration. The 45 kg/hr treatment process includes many commercially available components which were modified to meet actinide containment requirements. System selection criteria included flexibility to accept a wide range of feed compositions, ease of combustion rate control, low particulate emissions from the incinerator, high combustion efficiency, and the ability to tolerate relatively high levels of noncombustibles.

Process Description

The CAI process, shown as a simplified illustration in Fig. 2, is divided into four subsystems: feed preparation and introduction, the incinerator, off-gas cleanup, and scrub-solution recycle. The core process consists of a two-stage, refractory-lined, natural-gas-fired incinerator combined with a high-energy aqueous scrub system and high-efficiency particulate air (HEPA) filter banks. An induced-draft configuration maintains negative internal draft to assure radioisotope containment.

TRU wastes are received in 0.06 m^3 cardboard boxes. Prior to incineration, these packages are assayed for TRU content and passed through an x-ray assembly to detect incompatible items such as large noncombustibles and bottles of explosive liquid.

Wastes are charged batchwise via a ram feeder to the lower incinerator chamber. Underfire air admission maintains slightly richer than stoichiometric oxygen concentrations. Normal combustion temperatures range from 800 to 1000°C. Unburned volatile compounds and particles from the lower chamber burn to completion under high excess air in the upper chamber. Secondary air is introduced in the duct connecting the two chambers, and a nominal temperature of 1100°C is maintained by a second natural-gas burner.

Gravity ash dropout to a hopper and pneumatic transport system permits continuous incinerator operation. A vacuum ash removal system permits thorough cleanout of both chambers.

Exhaust from the CAI upper chamber, containing inorganic acids and a small amount of particulates, sequentially passes through a quench column, venturi scrubber, packed column, and HEPA filters before release to the environment. In the quench column, exhaust gases are cooled from 1100°C to 95°C by direct spray contact with recycled scrub solution. The cooled gases pass through a variable-throat venturi where high turbulence and liquid droplet contact remove most remaining particulates. Residual mineral acids are removed from the gases by countercurrent contact with recycle scrub solution or fresh water. A condenser removes the bulk of water vapor from the scrubbed gas stream, and reheaters raise the gas temperature to avoid condensation in the filter housing and induced draft blower. A roughing filter followed by two sets of HEPA filters in series provides for final removal of particulates.

Scrub solution recycle is used to minimize liquid waste generation. Cartridge filters remove contained particulates, automatic caustic addition maintains a slightly basic condition, and the graphite heat exchanger cools the recycle solution to approximately 50°C. The scrub solution then enters a receiver surge tank for recycle to the quench column and venturi scrubber. In addition, the condensate obtained from off-gas conditioning prior to HEPA filtration is pumped to the packed column in lieu of using fresh water.

Status and Goals

Nonradioactive development was completed during September 1979; TRU operations began in December. A few of the more significant results to date are:

(1) the CAI has been operated at the design feed rate of 45 kg/hr with good agreement between observed and calculated parameter values;

(2) mass and volume reduction ratios of 10:1 and 40:1, respectively, were realized for combustion of the simulated design basis feed (35% cellulosics, 23% polyethylene, 12% PVC, and 30% rubber); and all

constituents of the anticipated waste feed have been burned in the CAI at concentrations up to at least 50% of the charged waste;

(3) more than 800 hours of operating time have been logged on the complete system with no adverse signs of corrosion, erosion, or wear on any of the primary components;

(4) the off-gas cleanup subsystem has functioned very satisfactorily even under abnormal operating conditions. The maximum chloride and sulfate ion concentrations measured at the HEPA filter station were on the order of 10 ppm. HEPA filter life has been demonstrated to be in excess of 230 hours of operating time;

(5) some 230 kgs (56 boxes) of TRU contaminated wastes generated by a LASL plutonium facility were processed through the CAI system. The overall operation was very satisfactory and all combustible secondary wastes, e.g., spent liquid filter cartridges, were charged to the incinerator at the conclusion of the run. The realized primary volume reduction ratio significantly exceeded the 40:1 predicted by nonradioactive experiments.

A final demonstration run with TRU waste will complete the CAI demonstration program for as-generated Defense solid wastes. Experimental results, equipment design specifications, and recommended operating procedures are being assembled for publication in FY 1980.

Transfer of CAI technology to other DOE sites and to the commercial nuclear industry is a continuing objective. Two operational units which incorporated LASL-supplied equipment specifications and operating information are located at the Lawrence Livermore Laboratory (LLL) and the Westinghouse nuclear fuels plant in Columbia, SC. The LLL incinerator is used for disposal of pathological and other nonradioactive hazardous wastes; the Westinghouse unit will be used for uranium recovery and waste volume reduction. In addition, operational use of the CAI process is planned at Savannah River Laboratory (see following section) and at LASL.

Commercialization of the CAI process for treatment of LLW generated by the nuclear industry is a near-term DOE goal. Proposals are being considered in which nuclear utility, vendor, and DOE funds would be used to provide for operational demonstration at a reactor or a regional incinerator site.

Low Level Waste CAI (SRL)[6]

A reference incineration process is being developed at SRL to reduce the stored volume of combustible process waste contaminated with low-levels of beta-gamma emitters. More than 5660 m^3 of this waste is disposed of annually in burial ground trenches. Volume reduction realized from incineration is anticipated to be a ratio of 20:1. The incinerator will also be used to dispose of an inventory of 6×10^5 L of degraded solvent from chemical separations and the current generation volume of 19,000 L/yr.

Process Description

The planned process (Fig. 3) incorporates a two-stage, 185 kg/hr controlled-air incinerator similar in design to the LASL demonstration unit. Due to the presence of tributyl phosphate solvent in the waste, powdered lime is added to react with the phosphorus and prevent the formation of highly corrosive P_2O_5. Solvents not containing phosphorus are spray injected directly into the primary chamber while the secondary chamber provides for complete combustion.

Equipment is provided for cooling, neutralizing, and filtering the incinerator off-gas. A spray quench reduces the gas-phase temperature to 150°C prior to prefiltration. This reduced temperature is necessary to ensure the deposition of volatiles and to prevent adsorption of moisture by hygroscopic salts on the sintered-metal prefilters. Hydrochloric acid and SO_2 in the off-gas are neutralized by a lime coating on the prefilters; residue buildup is controlled by reverse flow purging and gravity discharge in drums. Prior to HEPA filtration, the gases are further cooled by air dilution to 90°C.

Status and Goals

A full-scale nonradioactive demonstration unit of this design is proposed for construction and testing during 1980.

Budget estimates for the production LLW incinerator facility are being prepared for 1982 funding.

Alpha Waste CAI (SRL)[7]

A 5 kg/hr throughput controlled-air incinerator, also known as the electric air incinerator, is being developed for combustion treatment of Savannah River Plant solid TRU wastes. The unit is designed specifically to incinerate small quantities of solid wastes contaminated up to 10^5 times the minimum of 10 nCi/g alpha activity of TRU waste.

Process Description

A ceramic two-stage electrically heated controlled-air incinerator employs a three-stage wet off-gas system prior to HEPA filtering (Fig. 4). The waste feed is mechanically shredded and packaged in 250-g, 10-cm by 23-cm long paper bags prior to incineration. These packages are dropped from a rotating feed magazine through a double-valve airlock and rammed into a silicon carbide horizontal primary combustion chamber. The waste is semipyrolyzed at 700-900°C with substoichiometric purge air. At the exit of the primary tube, the ashes fall into a lower retention chamber where they can be removed periodically through a double-valve airlock. The pyrolysis gases are burned in a mixing nozzle where excess air is added in the first tube of the vertical labyrinth afterburner. Nine cast alumina afterburner tubes are connected in series by cast manifolds to create a continuous tortuous path. The purpose of the long labyrinth is to provide an off-gas residence time of up to 8 seconds at 1000°C to ensure complete combustion. The top manifold blocks contain access plugs for cleanout, instrument probes, sight glasses, and exhaust ports. It is possible to vary the useful length of the afterburner and experimentally define the optimum afterburner volume for the future production incinerator.

The off-gas treatment consists of three independent liquid scrubber systems: a venturi quench, a fibrous-bed scrubber, and a packed-bed contactor to neutralize HCl formed from the burning of PVC. The purpose of three independent scrubber loops is to minimize the volume of TRU-contaminated salt from the evaporation of the scrubber solutions. Most particulates are captured in the first two scrubbers; hence, the neutralizing

scrubber is last in the scrubbing sequence. The first two isolated scrubber loops continuously recycle water which becomes saturated with HCl, but retain the off-gas particulate. In-line filters in the two scrubber loops remove entrained particulates and tars. With infrequent replacement of the water in these loops, generation of TRU-contaminated salt is sharply reduced.

The incinerator off-gas undergoes final filtration by passing through HEPA filters series before release. To prevent blinding of the HEPA filters by condensate, the saturated effluent from the scrubber is then superheated to pass through the filters in a dry state. The gas flow is induced by a blower which maintains a negative draft and discharges to the atmosphere.

Incinerator Description

A cutaway view of the incinerator is shown in Fig. 5. Distinguishing features of the incinerator are compactness, light weight, and ease of assembly provided by using prefabricated ceramic components to form two combustion chambers, surrounded by 25 cm of packed fiber insulation within a 0.65 cm-thick airtight steel shell. The vertical tubes and mainfolds maintain an airtight seal by the compressive load of their own weight.

Thermal expansion is compensated by the freestanding tubes and independent manifolds. Thermal cycling of the ceramic components is minimized by maintaining the unit at operating temperatures continuously. Because the thermal yield of the burned waste is low, supplemental heating is required. Electric heating is used for intrinsic safety by minimizing off-gas from high activity transuranic wastes. Girdle heaters on the outside of the tubes and flat plate heaters on the end manifolds provide 125 kw heat input to the incinerator.

Status and Goals

Over 250 kg of nonradioactive wastes characteristic of plutonium finishing operations have been incinerated at throughputs exceeding 5 kg/hr for periods up to 6 hours. Safety and reliability were major design objectives. The projected

waste feed consists of 31% cellulosic, 27% PVC, 21% polyethylene, and 21% rubber.

Upon completion of an initial experimental phase to determine process sensitivity and flexibility, the facility will be used to develop bases for the production unit Safety Analysis Report, technical standards, and operating procedures. Operational processing of freshly generated TRU waste is scheduled to begin in 1981.

CYCLONE INCINERATION

A cyclone incinerator has been developed at the Mound Facility for disposal treatment of radioactive solid wastes.[8] The concept provides the option of using a typical steel waste drum as the primary combustion container or substituting a more permanent vessel for this service. Design simplicity and low capital costs are attractive features of this incineration system.

Process Description

The cyclone incineration process has been demonstrated with as-generated alpha-contaminated wastes from the Mound Facility. Approximate mass-basis analysis of the feed was recorded as follows: 32% paper, 9% PVC, 29% polyethylene, 8% polypropylene, 13% rubber, 3% cloth, and 6% metal. Uncompacted wastes burn at an average rate of 27 kg/hr. Compaction of the waste feed was found to slow the combustion rate.

Figure 6 is a process flow diagram showing major components of the overall process. Induced-draft fans provide system flow and maintain a negative draft throughout the process. The combustion unit proper consists of two chambers, a fixed upper section which includes the air inlet piping and baffling, and a lower removable section which usually is the original steel waste container. During operation, cooling panels are placed around both chambers.

Combustion air enters the induction cover atop the drum tangentially at a rate (300 scfm) which causes a downward spiral to be created. Wastes, ignited by a small quantity of

liquid fuel, burn uniformly downward, while combustion gases move upward inside the spiral. Hot combustion gases (up to 1320°C) pass through baffles, which reduce particulate carry-over, and enter the deluge tank where they are cooled and scrubbed of acid gases and particles. The gases then pass through a venturi scrubber, demister, HEPA filter, and finally through the fan to the atmosphere.

Scrub liquid is continuously recirculated through the deluge and recycle tanks, heat exchanger, and vertical leaf filter. Particles in the deluge solution are removed by the vertical leaf filter, which is periodically emptied. Because acid gases are absorbed and neutralized in the deluge liquid, the solution pH is continuously monitored and the reacting base is replenished as required. In addition, recirculation flow rate and temperatures throughout the system are monitored continuously. Gases discharged to the atmosphere are sampled for radioactivity as well as NO_x and SO_x content.

In a batch operation, a drum of waste is moved into position, either remotely or manually depending upon the level of radioactivity. The drum is raised on a pneumatically operated platform until it fits snugly under the air induction cover. Once in position, the ignition system is turned on long enough to ignite the waste. The blowers are then turned on causing a cyclone to form within the drum and the fire to quickly reach high intensity

The blowers continue to operate until the drum is cooled to a manageable temperature. A probe in the off-gas line indicates a temperature drop when the waste has been consumed. Ash is conveyed pneumatically to an interim storage container prior to immobilization. The drum can be recycled or compacted as necessary.

Status

More than 6000 kg of low-level plutonium wastes have been burned at Mound Facility since December 1976. Realized mass and volume reduction ratios were 10:1 and 43:1, respectively. - Preliminary design criteria have been published.

Present development efforts are focused on adapting the cyclone incinerator for use with LLW as well as TRU wastes.

Fission-product distribution and off-gas system studies are in progress. In addition, a substantial effort is being expended to facilitate commercial use of this concept. Demonstration tests are planned for radioactive operation at a nuclear utility site by 1984.

ELECTROMELT INCINERATION

The adaptation of electric glass-melting furnaces for the incineration and simultaneous fixation of resultant residues in glass is a relatively recent concept proposed for the treatment of radioactive wastes. Technology for producing high-quality glasses using the conductive properties of glass at elevated temperatures is well established. Units capable of producing up to 140 tons per day (TPD) of glass product have been operated successfully for many years.

Penberthy Corporation, located in Seattle, Washington, has constructed small furnaces in which toluene, glass scraps, paper, wood, concrete, rubber, plastics, and small amounts of metal have been treated.[9] They presently are building an electromelt incinerator capable of treating up to 112 kg/hr of toluene or 225 kg/hr of cellulosic wastes. Based on combustion experience to date, it is projected by Penberthy that a 140 TPD-glass furnace could accept up to 700 TPD of waste feed.

Process Description

A conceptual flowsheet of the Penberthy Pyro-Converter® process is shown in Fig. 7. Solid wastes are ram fed into the molten glass; liquid and slurry wastes are piped at controlled rates onto the pool surface. Temperature of the glass is maintained above 1260°C by immersed electrodes. Materials ignite and burn on entering the molten glass and adequate residence time is provided to assure complete combustion. Evaporation and ash residues along with melted noncombustibles combine with the glass which is drained off periodically as excesses are generated. Depending on the waste composition, various additive compounds are fed to the electromelt bath to assure that the glass/waste matrix is chemically durable. The glass product discharges into canisters which, after cooling, are ready for transport to final disposal.

Flue gases pass through a set of ceramic fiber prefilters before entering a low-energy aqueous scrub system for cooling and neutralization prior to charcoal and HEPA filtration. System flow is maintained by induced-draft fans. Sludges and filter elements generated by off-gas cleanup operations will be charged to the furnace to minimize secondary waste generation.

Status and Goals

The preliminary and somewhat proprietary nature of the electromelt incineration concept precludes detailed description of the process; however, potential advantages as well as disadvantages are apparent. Use of the Joule effect to provide supplemental process heat will substantially reduce the total process off-gas volume compared to an equivalent fossil-fuel-fired incinerator. Conversely, the cost of electric power requirements (estimated at 800 kwH per ton of product) could exceed greatly the cost of required fossil fuel.

Many design provisions presently are unknown or unavailable, e.g., afterburner requirements, off-gas cleanup needs, capacity to handle noncombustibles, and overall system reliability. Development studies presently underway should provide many answers and more adequately define the role of electromelt incineration in radwaste treatment.

Immediate interest in this process lies in LLW treatment and in the immobilization of TRU residues from the slagging pyrolysis incinerator (SPI). Potential of the electromelt process for treatment of institutional wastes is being considered. Current plans include the possible fixation of combined effluents from the SPI and the associated off-gas cleanup system.

FLUIDIZED BED INCINERATION

Fluidized bed incineration is being developed at the Rocky Flats Plant (RFP) as an alternative to conventional incineration for processing combustible radioactive wastes.[10] The primary project objective is to demonstrate a production-scale treatment process for TRU wastes; however, extensive development work related to other nuclear fuel cycle wastes has been

completed.[11] Development of the fluidized bed combustion technology was completed with a 9 kg/hr pilot unit and demonstration runs are being conducted in an 82 kg/hr production-scale plant. The fluidized bed process incorporates three unique concepts : (1) sodium carbonate (Na_2CO_3) bed material provides for in situ neutralization of acid gases produced by combustion of materials such as PVC; (2) a catalytic afterburner is used to provide complete combustion; and (3) a nonflaming low-temperature combustion is maintained throughout the system.

Process Description

Figure 8 is a flow schematic of the fluidized bed incineration demonstration plant. The entire operation is carried out within a hot cell and utilizes glovebox enclosures to contain radioactive contamination. Analysis of TRU waste to be charged to the process indicated the following approximate composition: 50% paper, 22% polyethylene, 9% cloth, 5% wood (HEPA filter frames), 4% PVC, 4% latex rubber, and lesser amounts of leather and other plastics. Waste passes through an air lock into a feed preparation glovebox where it is hand sorted for removal of large-size tramp metal. Combustibles are then fed into a low-speed, cutter-type shredder for coarse shredding. Small pieces of tramp metal not detected during hand sorting are shredded along with the combustibles. Coarse shredded material passes through an air classifier for removal of most of the remaining tramp metal. Metal separated by the classifier falls into a glovebox where it can be bagged out for disposal. The waste, containing trace amounts of metal, is pneumatically transferred into a second shredder for final sizing prior to incineration. A constant-pitch tapered screw feeds the shredded waste into a primary reactor of heated Na_2CO_3 granules which are fluidized by compressed air and nitrogen. Within the hot fluidized bed, the waste is decomposed by partial combustion and pyrolysis which producessufficient heat to maintain a bed temperature of 550°C. The air-nitrogen ratio of the fluidization gas is adjusted to promote the desired amount of combustion without open flame burning. Within the fluidized bed of Na_2CO_3, in situ neutralization of acid gases is accomplished. Off-gas from the primary reactor passes into a cyclone separator where most of the entrained Na_2CO_3, NaCl, and fly ash are removed before the gas enters the catalytic afterburner. Combustion air is added to the gas stream as it passes through a fluidized bed of oxidation

catalyst. Convective heat from the afterburner is removed by a water jacket.

Flue gas leaving the catalytic afterburner contains fly ash, catalyst dust, and small amounts of Na_2CO_3, and NaCl fines not removed from the primary reactor off-gas by cyclone separation. About 75 to 85% of this dust is removed by passing the gas stream through a second cyclone separator. The remainder is removed as the gas passes through a bank of sintered metal filters prior to cooling to 50°C in a water-cooled heat exchanger. The cooled flue gas is then pulled into four high-speed blowers which maintain a slightly negative draft throughout the system. Off-gas from the process passes through a bank of HEPA filters prior to exiting through the building plenum system of four-stage HEPA filtration. Dust removed by cyclone separation and sintered metal filtration is cooled in the residue conveyor during transfer to a drum for disposal.

The development plant will feature automatic control systems to regulate bed temperatures within the primary reactor and catalytic afterburner. The primary bed temperature will be controlled by the air-to-nitrogen ratio of the fluidization gas. Catalytic afterburner temperature will be regulated by the quantity of waste being fed into the system.

Status and Goals

Waste burning operations in the fluidized bed incineration demonstration plant began in November 1978. During four 100-hour runs more than 13,100 kg of solid wastes were charged to the system; approximately 30% of this total was TRU-suspect waste. Process operations were successful with charging rates exceeding the design rate of 82 kg/hr. Two significant changes to plant design were made: the sintered metal filter face velocities were reduced to permit cake disengagement, and air ejectors replaced the high-speed blowers which proved unreliable. Modifications to permit liquid waste (compressor oils, chlorinated solvents) injection are in progress. Demonstration runs and compilation of design documents will be completed near the end of FY 1980. Important demonstration goals will include the determination of system reliability, maintenance requirements, and volume reduction capability.

Fuel cycle waste studies in the pilot-plant fluidized bed incinerator were terminated at the end of FY 1979, however, successful burning of HEPA filter frames, tributyl phosphate (TBP) solvent solutions, and polychlorinated biphenyls (PCB's) was achieved. Immobilization of these residues in glass was also demonstrated.

Following demonstration completion, planned use includes routine treatment of RFP-generated low activity TRU wastes. At present, the fluidized bed incinerator is not proposed for demonstration as a commercial unit. Should commercialization interest develop, the demonstration plant could serve as a development facility for LLW treatment.

PRODUCTION INCINERATORS

Two production incinerators, a rotary kiln and a single hearth, are being installed in a new facility under construction at the Rocky Flats Plant.[12] Both are designed to process alpha-contaminated wastes; the rotary kiln system will accept higher activity material while the single hearth is restricted to trace activity wastes. Descriptions of the process systems are combined in the following paragraphs.

Process Description

Simplified flow diagrams for the rotary kiln and single hearth incineration processes are shown in Fig. [9] Solid wastes to be processed in these units will be shipped to the incineration area in 208-L drums and cardboard boxes, which have been assayed and designated as high- or low-activity waste. The anticipated composition of rotary kiln feed is shown in Table I; Table II contains the liquid and solid feed compositions for the single hearth unit.

Table I. Rotary Kiln Feed Composition

Solid Waste Component	Mass %	Liquid Waste Component	Mass %
Paper	46.0	Trichloroethane	36
Rubber	25.0	Carbon Tetrachloride	33
Wood	6.5	Cutting Oil	13
Cloth	6.0	Water	8
Water	5.0	Ion Exchange Resin	7
Polyethylene	5.0	Misc. Lab. Waste	3
PVC	1.0		
Leather	0.5		

Table II. Single Hearth Feed Composition

Mixed Waste	(Wt. %)
PVC	50
Polyethylene	12
Polypropylene	12
Paper	26

Plus batch quantities of leaded dry box gloves, HEPA filters, and graphite

The rotary kiln was selected for high activity waste incineration because the concept provides for automatic continuous removal of ash and minimal hold-up in the unit. Both features are advantageous because low melting ash materials are processed by the unit and fissionable materials hold-up is minimized. The kiln is 1.8 m internal diameter (ID) by 4.6 m long. Solid waste, supplemental fuel, and combustion air are introduced at one end of the unit. Complete ash removal is accomplished by continued rotation after the feed to the unit has been stopped. Nominal waste throughput rate is 40 kg/hr.

The single hearth unit was selected for the low activity waste application primarily for its automatic ash removal system and with the hope that extended refractory life would be obtained with a stationary unit. The vessel is 2.6 m in diameter and 4.6 m in high. Operation in a cyclic manner will be as follows:

1. Feed Cycle - waste will be charged on a frequency of about 2.5 kgs every 2 minutes for a period of about 5 hours. During this period the rabble arm will continually mix the burning waste and the ash generated will accumulate in the unit.

2. Burn-out Cycle - waste feeding will stop and the unit will be held at the operating temperature by combustion of supplemental fuel for about an hour to allow complete burn-out of the solid waste.

3. Ash-Discharge Cycle - the ash-discharge door will be opened and the ash raked out by the rotation of the rabble arm over a half hour period. After the ash discharge, the unit can be returned to the feed cycle.

Normal operating temperatures for both incinerators are 800°C in the primary combustion chamber and 1000°C in the afterburner. Diesel oil is used as supplemental fuel. The flue gas passes through two stages of high energy venturi scrubbers, and then enters a filter plenum where it passes through four stages of HEPA filtration. Fans downstream of each scrubber provide draft for the incinerator and scrubbing system. Additional fans downstream of the filters draw the gas and room exhaust through the filter plenum.

Both incineration processes are installed as hot cell operations. Normal operations will be conducted remotely; maintenance will be performed by personnel in bubble suits inside the hot cells.

Status and Goals

Both of these processes have been installed at the Rocky Flats Plant and the equipment checkout phase is in progress. Operation with cold wastes will begin in June 1980. Charging of alpha-contaminated wastes is scheduled to begin in July 1981.

SLAGGING PYROLYSIS INCINERATION

Slagging pyrolysis incineration (SPI) has been proposed as the core process for treatment of buried and stored TRU waste at the Idaho National Engineering Laboratory (INEL). A final decision awaits completion of the environmental impact statement (expected 1981); however, to meet a planned 1986 operations start date, conceptual design and R&D efforts in support of processing alternatives were initiated in May 1979.

The projected 1985 TRU inventory at INEL includes 56,700 m^3 of buried waste, an equal volume of stored material, and up to 106,300 m^3 of contaminated surrounding soil. Buried waste includes significant quantities of nonradioactive hazardous materials, e.g., toxic and pyrophoric chemicals. Selection of the SPI process to render the wastes inert and immobile followed extensive evaluation of available incineration concepts. The constraint that the selected process be capable of accepting huge volumes of largely unsegregated waste weighed heavily in favor of the SPI concept.

Process Description

The basic process (Fig. 10), a proprietary system of ANDCO, Inc. (Buffalo, NY), is a spinoff from steel production technology and currently is being used in Europe for municipal waste disposal. Design capacity of the conceptual process flow sheet is 93.6 mt/day which includes supplemental wood and coal fuel.

TRU waste will be unpackaged, sorted, and mixed with coal and wood chips. The incinerator will consist of a vertical, cylindrical gasifier (1.4 m diameter, 12 m high) and secondary combustion chamber (SCC). Drying occurs in the upper part of the gasifier; incineration and molten slag formation takes place in the lower refractory-lined section. Preheated air injected near the gasifier base supports oxidation of the wood, coal, and combustible waste fraction. Off-gas from the SCC sequentially passes through a heat recovery boiler, a neutralizing spray dryer, sintered-metal filters, an NO_x catalytic reactor, and HEPA filters. Particulates from the boiler and off-gas treatment system are combined with molten slag from the gasifier and SCC in an electromelt tundish. Material hold-up and mixing in the electromelt process will produce a more

uniform slag which, following solidification in a suitable container, will be ready for interim storage or disposal.

Status and Goals

In conjunction with the SPI facility design, the project is supporting slag product studies to determine leaching and casting properties as functions of composition and temperature, mold requirements, vitrification characteristics, and TRU distribution. A 90 mt/day pilot demonstration plant utilizing the ANDCO process is being designed to obtain operating data for the incineration and off-gas treatment components. Additional support tasks include remote maintenance and operations studies, TRU assay development, and criticality analyses.

Providing necessary funding levels and approvals are obtained, the project schedule includes conceptual design publication in 1980; R&D efforts completion in 1981; start of construction in 1983 with completion in 1986; cold testing during 1986 and 1987; and hot operations beginning in 1987. The total estimated cost of the facility exceeds $550 million.

CONCLUSIONS

Primary emphasis to date for the majority of DOE incineration projects described in this report has focused on TRU waste management and plutonium recovery concerns. Several of these projects are approaching, or are in, final demonstration phases and redirection to other waste management concerns is being considered.

Second-generation development projects, such as the study of incinerator off-gas systems at LASL and advanced filtration technology studies at several sites, are underway with the intent of refining DOE combustion design technology. Further, while many aspects of the described incineration technologies are directly transferable to other nuclear waste applications, some planned uses require modification of the in-place equipment components. To meet LLW incineration needs, several development and cooperative-venture demonstration projects have been proposed to define remote handling and off-gas system requirements. In addition, projects to study incineration potential for treatment of nonradioactive hazardous waste are also being considered. DOE resources, facilities, and personnel, assembled in the course of TRU combustion development projects can and will make a substantial contributrion to the effective treatment of a broad spectrum of currently unresolved problem-waste issues.

REFERENCES

1. General Manager's Task Force, "Incineration of Radioactive Solid Wastes." USAEC Report WASH-1168 (August 1970).

2. B. L. Perkins, "Incineration Facilities for Treatment of Radioactive Wastes: A Review." Los Alamos Scientific Laboratory Report, LA-6252 (July 1976).

3. C. R. Allen, R. Cowan, J. Devine, "Acid Digestion of Combustible Waste." Hanford Engineering Development Laboratory report TME-78-77 (October 1978).

4. L. C. Borduin, A. S. Neuls, T. K. Thompson, C. L. Warner, "Controlled-Air Incineration Studies at the Los Alamos Scientific Laboratory." presented at Waste Management '78, Tuscon, Arizona. LA-UR-78-1065 (March 1978).

5. L. J. Johnson, ed., "Nuclear Waste Technology Development Activities, January - December 1978." Los Alamos Scientific Laboratory report LA-7921-PR (June 1979).

6. H. E. Hootman, "Beta-Gamma Contaminated Solid Waste Incinerator Facility." Savannah River Laboratory report DPSTD-79-34 (October 1979).

7. J. H. Warren, "Design of an Experimental Incinerator for Alpha Waste." Savannah River Laboratory report DP-1521 (August 1979).

8. L. M. Klengler, B. M. Alexander, and J. E. Todd, "Mound Cyclone Incinerator Preliminary Design Criteria - Batch Waste Operation." Mound Facility report MLM-2646 (September 1979).

9. Direct communication with L. Penberthy, Penberthy Electromelt Int'l., Inc., Seattle, Wash.

10. D. L. Anderson, B. A. Bell, P. K. Feng, and F. G. Meyer, "Fluidized Bed Incineration System for U.S. Department of Energy Defense Waste." Rocky Flats Plant report RFP-2811.

11. A. J. Johnson, S. C. Burkhardt, J. A. Ledford, and P. M. Williams, "Status Report Waste Incineration and Immobilization for Nuclear Facilities (October 1977 - March 1978)." Rocky Flats Plant report RFP-2863.

12. D. L. Ziegler, "Incineration, Process Fire, and Explosion Protection," presented at 13th AEC Air Cleaning Conference. (August 1974).

13. N. D. Cox et al., "Figure of Merit Analysis for a TRU Waste Processing Facility at INEL." EG&G Idaho, Inc., report TREE-1293 (October 1978).

14. T. G. Hedahl and M. D. McCormack, "Research and Development Plan for the Slagging Pyrolysis Incinerator." EG&G Idaho, Inc. report TREE-1309 (January 1979).

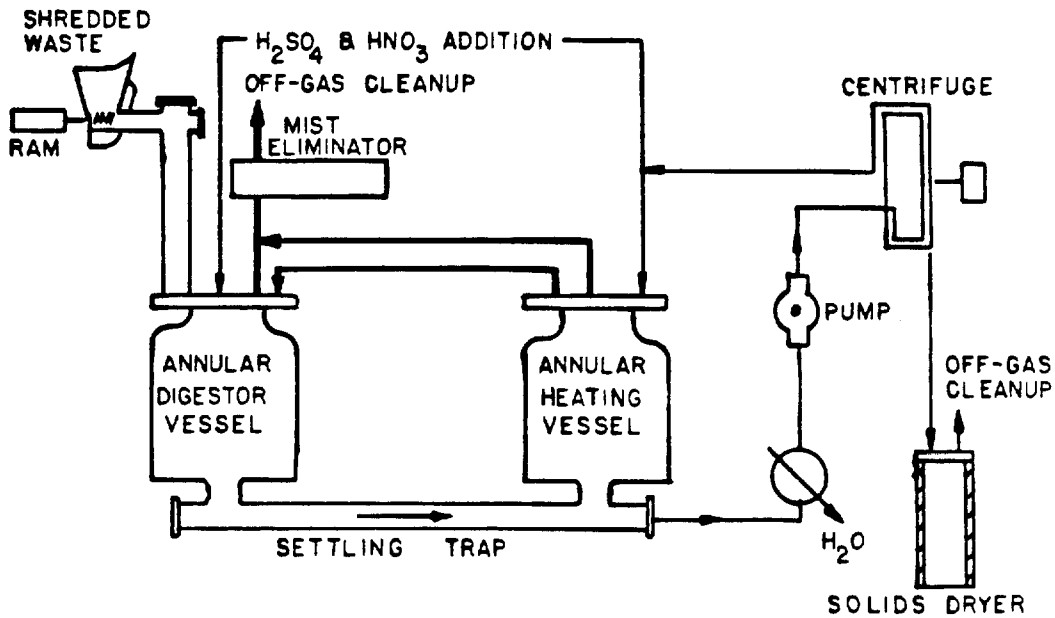

Figure 1. HEDL Acid Digestion Unit

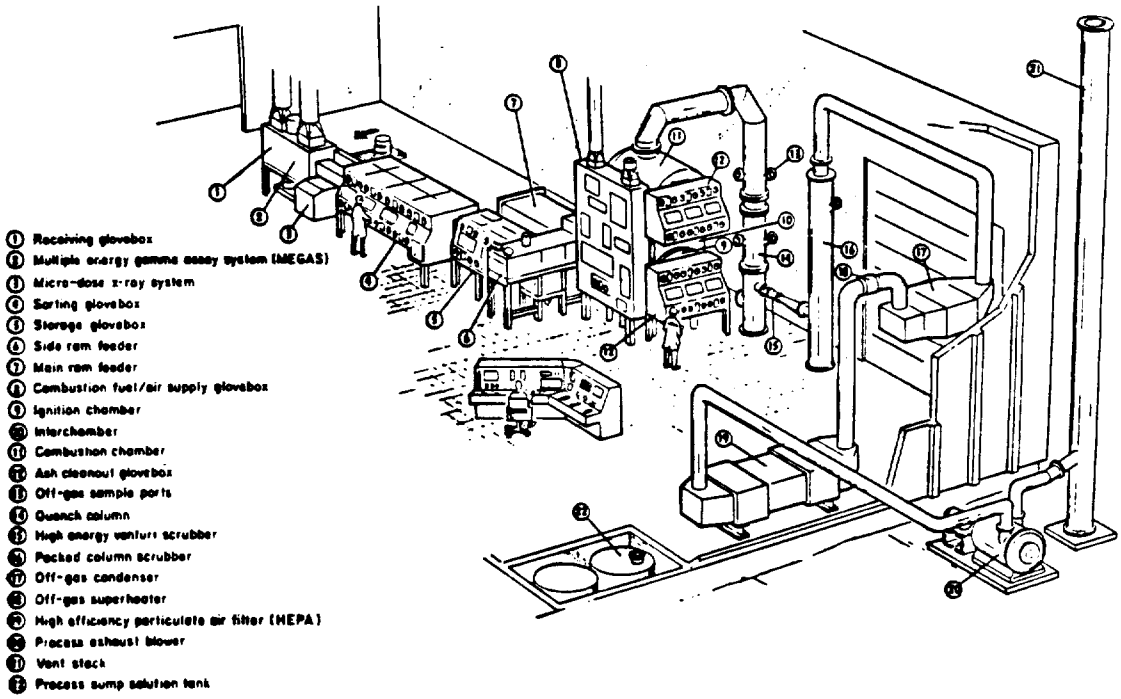

Figure 2. LASL Controlled-Air Incineration System

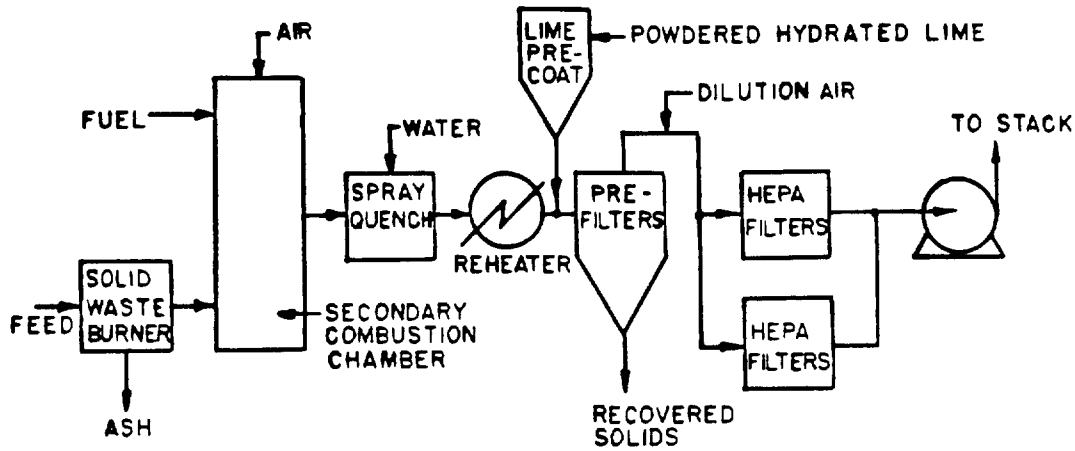

Figure 3. SRL CAI Process Flow Diagram

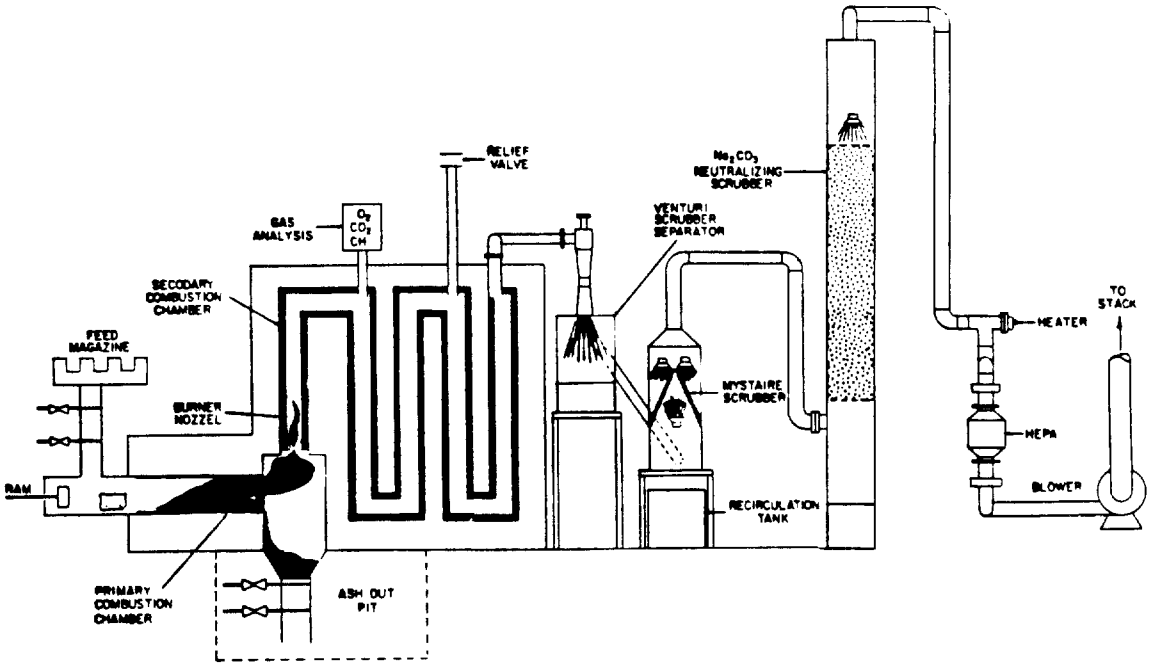

Figure 4. SRL Electric Air Incinerator Facility

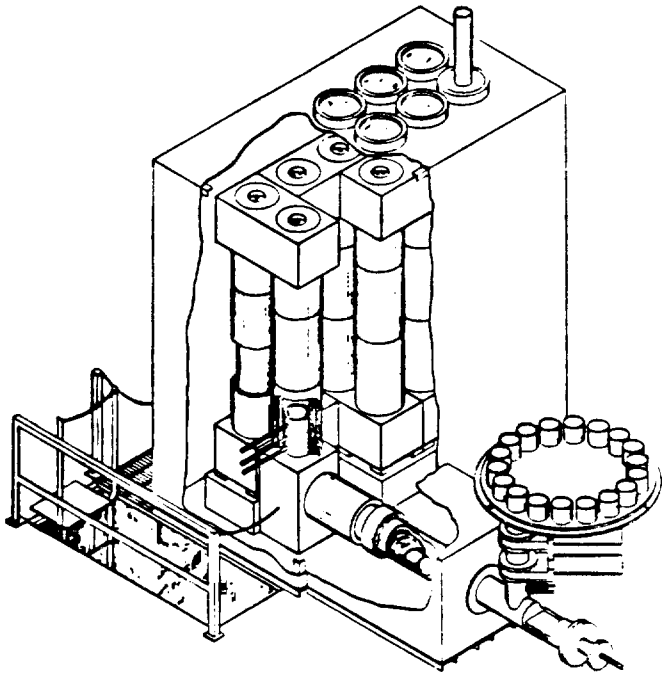

Figure 5. SRL Full-Scale Prototype Electric Air Incinerator

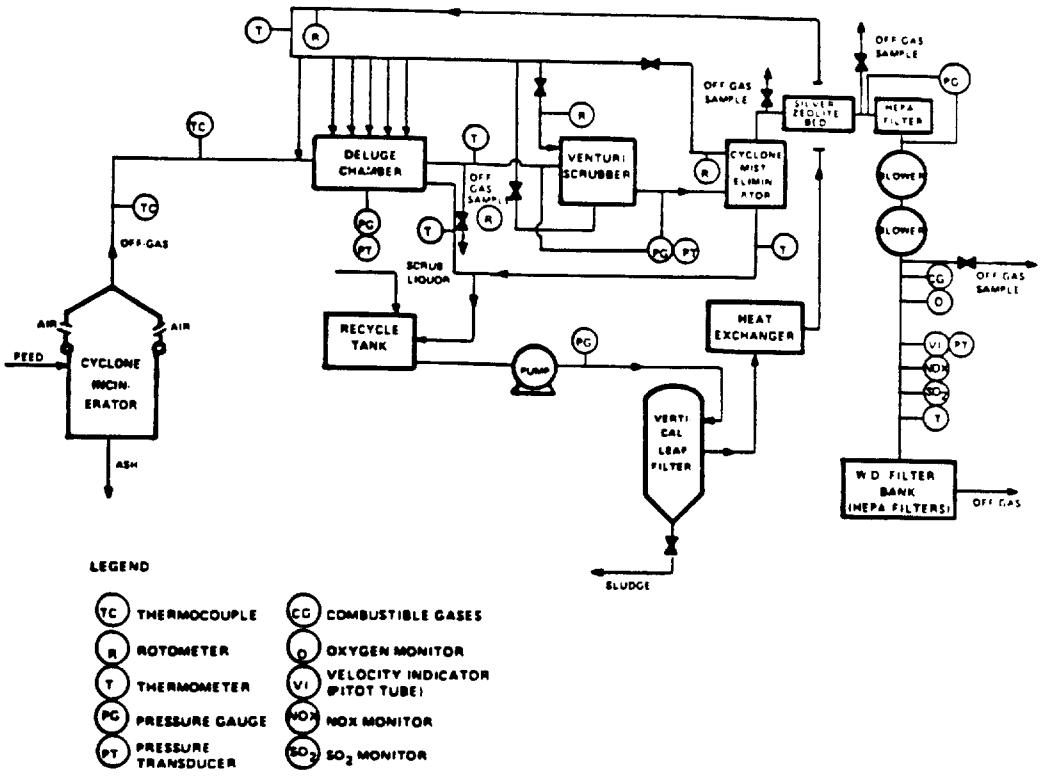

Figure 6. Mound Facility Cyclone Incinerator Process Flow Diagram

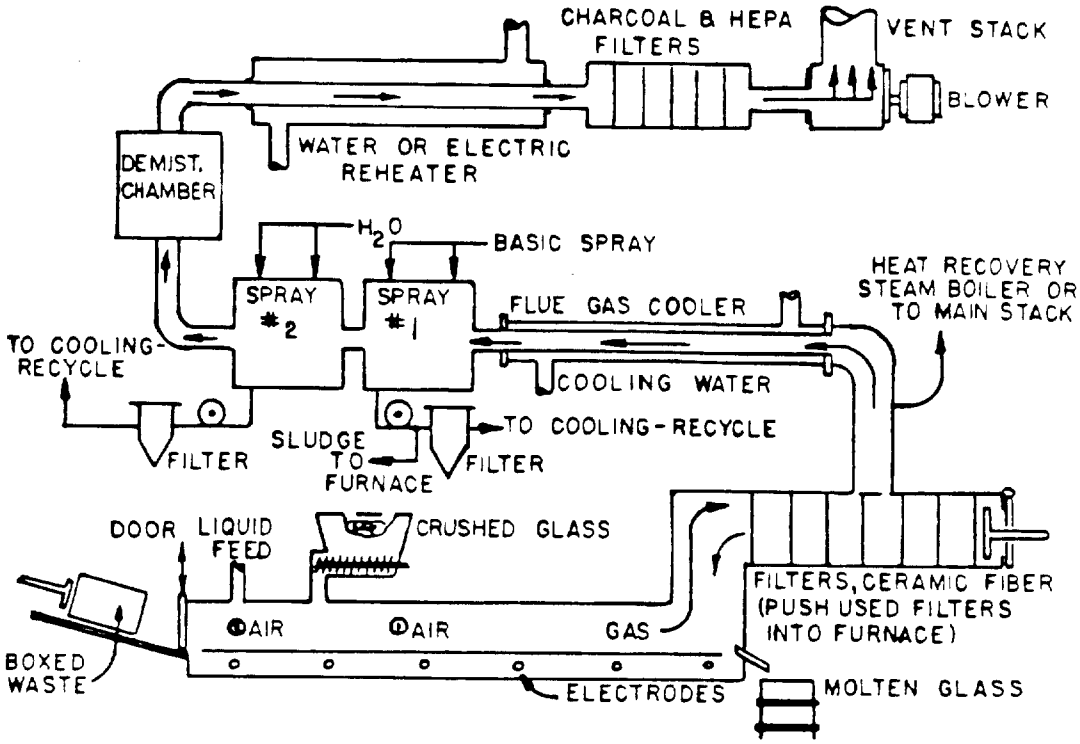

Figure 7. Penberthy Pyro-Converter

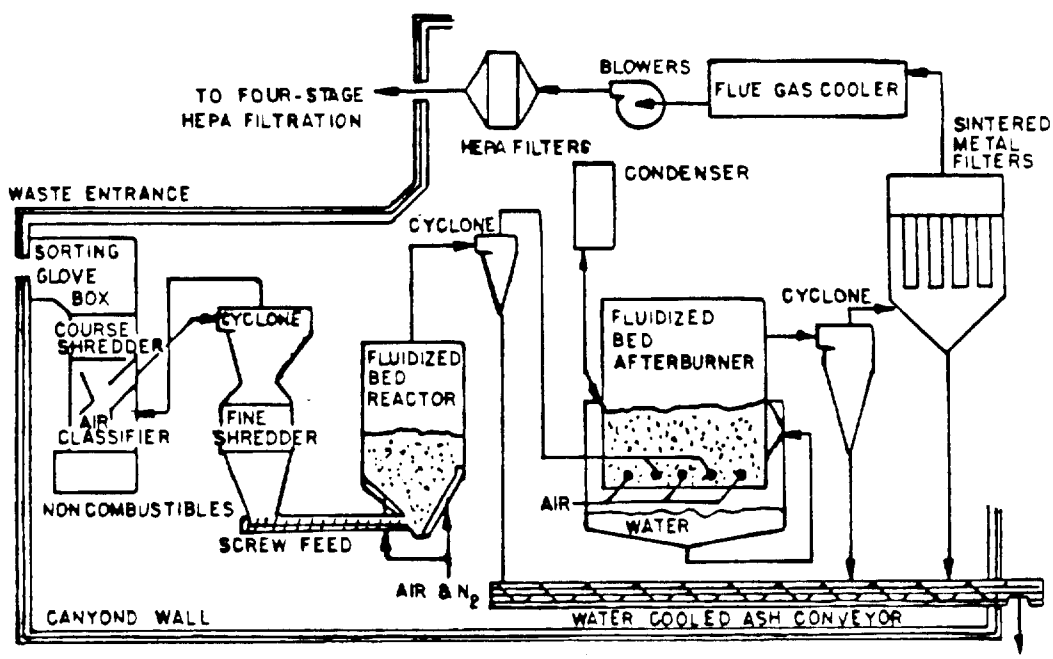

Figure 8. Rocky Flats Fluidized Bed Incineration System

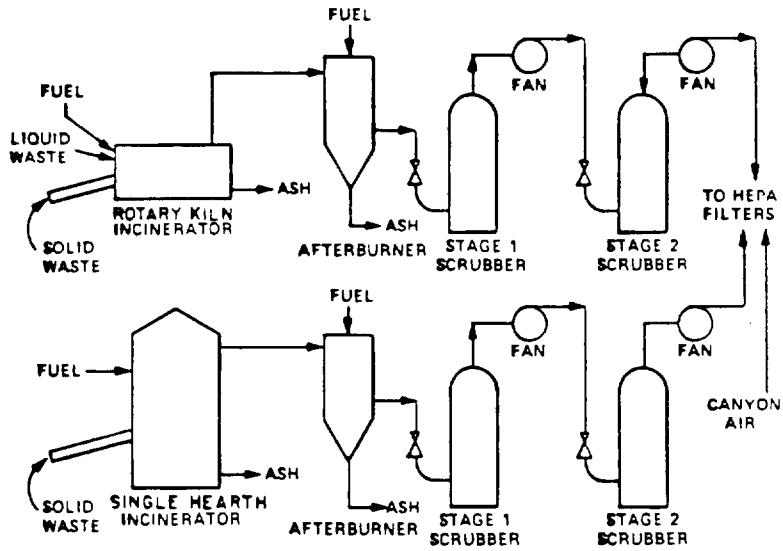

Figure 9. Simplified Flow Diagrams for Rocky Flats Incinerators

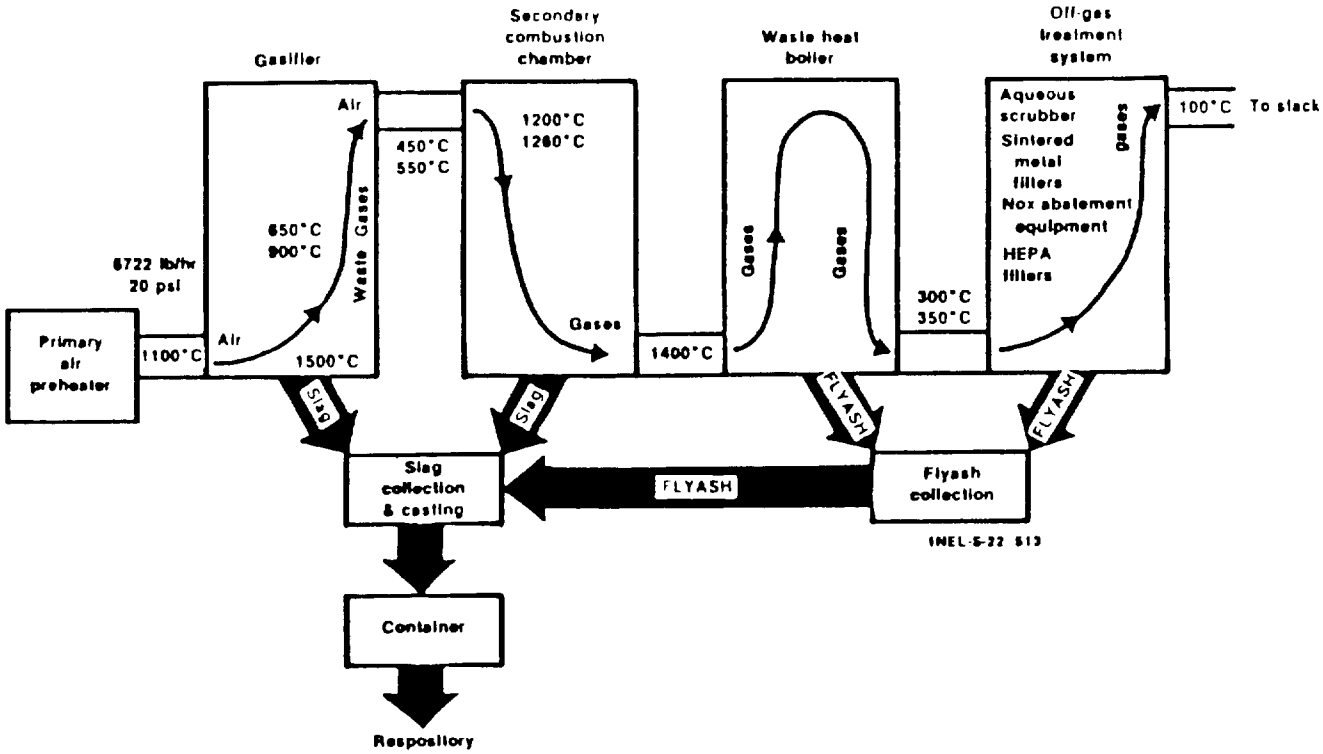

Figure 10. INEL Slagging Pyrolysis Waste Incineration Process

LOS ALAMOS NAT'L LAB.
LIB. REPT. COLLECTION
RECEIVED
SEP 20 PM 1 39

USDOE RADIOACTIVE WASTE INCINERATION TECHNOLOGY: STATUS REVIEW

Leon C. Borduin
Los Alamos Scientific Laboratory
Los Alamos, NM

Anibal L. Taboas
US Department of Energy
Albuquerque, NM

ABSTRACT

The current inventory of radioactive waste from the defense and commercial industries is $\sim 2 \times 10^6$ m^3 and increases $\sim 10^5$ m^3/yr due to current operations. Most of this waste can be classified as combustibles, liquids and sludges, or as non-combustible solids. The very substantial combustible fraction, which has the greatest potential for effective waste treatment, constitutes an average of 40% of the newly generated waste. Proper incineration reduces waste mass and volume and results in a more homogeneous and chemically inert waste form that can usually be disposed where the original waste form could not. Further, incineration significantly enhances the safety and certainty of waste handling, packaging, storage, and/or disposal operations.

Early attempts to incinerate radioactive wastes met with operation and equipment problems such as feed preparation, corrosion, inadequate off-gas cleanup, incomplete combustion, and isotope containment. The US Department of Energy (DOE) continues to sponsor research, development, and the eventual demonstration of radioactive waste incineration. In addition, several industries are developing proprietary incineration system designs to meet other specific radwaste processing requirements. Although development efforts continue, significant results are available for the nuclear community and the general public to draw on in planning.

This paper presents an introduction to incineration concerns, and an overview of the prominent radwaste incineration processes being developed within DOE. Brief process descriptions, status and goals of individual incineration systems, and planned or potential applications are also included.