LA-UR-80-2790

CONF-801011--4

TITLE: An Update On The Tritium Systems Test Assembly (TSTA)

AUTHOR(S): James L. Anderson and Don O. Coffin

SUBMITTED TO: 4th ANS Topical Meeting on the Technology of Controlled Nuclear Fusion, King of Prussia, PA, Oct. 14-17, 1980.

MASTER

DISCLAIMER

By acceptance of this article, the publisher recognizes that the U.S. Government retains a nonexclusive, royalty free license to publish or reproduce the published form of this contribution, or to allow others to do so, for U.S. Government purposes.

The Los Alamos Scientific Laboratory requests that the publisher identify this article as work performed under the auspices of the U.S. Department of Energy

University of California

LOS ALAMOS SCIENTIFIC LABORATORY
Post Office Box 1663 Los Alamos, New Mexico 87545
An Affirmative Action/Equal Opportunity Employer

Form No. 836 R3
St. No. 2629
12/78

UNITED STATES
DEPARTMENT OF ENERGY
CONTRACT W-7405-ENG. 36

AN UPDATE ON THE

TRITIUM SYSTEMS TEST ASSEMBLY (TSTA)

J. L. Anderson and D. O. Coffin
Los Alamos Scientific Laboratory

Summary

In January 1977 the Los Alamos Scientific Laboratory started designing the Tritium Systems Test Assembly (TSTA) to support the national fusion energy program. We have now designed all the necessary systems and are proceeding with the fabrication and installation of equipment at the TSTA facility. TSTA will be capable of processing fusion-reactor quantities of DT gas by early 1982. Units which we have already built and installed include the building utilities and ventilation, the Emergency Tritium Cleanup (ETC) and Tritium Waste Treatment (TWT) modules, and the cryogenic Isotope Separation System (ISS). We have contracted for the outside fabrication of a DT Fuel Clean-Up (FCU) package to be installed in 1981. We are now assembling on site the plasma chamber evacuation (VAC) and DT gas Transfer Pumping (TPU) modules and the computer-based Master Data Acquisition and Control (MDAC) system. We obtained several key components early in the program and conducted experiments that enabled us to complete design on some critical pacing systems. Among these important findings are: (1) that all plasma exhaust gases can be simultaneously evacuated with a compound-design cryopump; (2) that helium

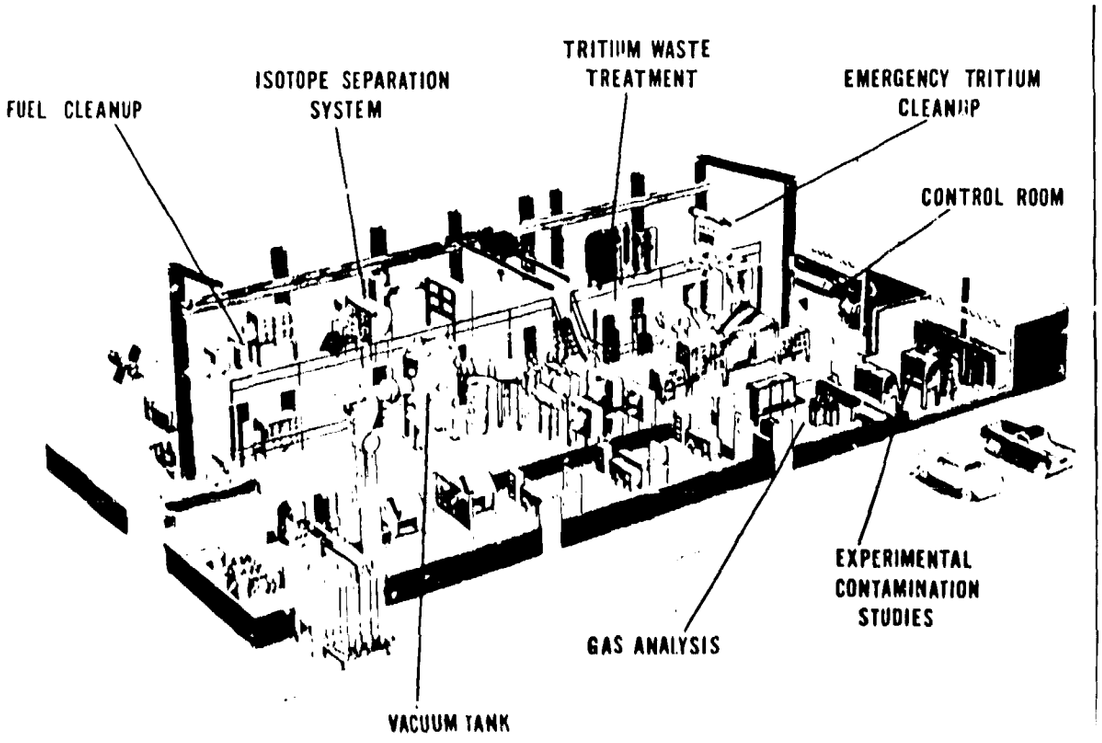

Fig. 1. Physical layout of the Tritium Systems Test Assembly.

"ash" can be separated from reusable DT fuel during cryopump regeneration; (3) that a multi-column cryogenic distillation system can be integrated and stably controlled; (4) that cryogenic adsorption provides adequate final-stage removal of condensable impurities; and (5) that oil-free, tritium-compatible vacuum and transfer pumps, which operate over the entire subatmospheric pressure regime required for TSTA processes, can be fabricated using state-of-the-art technology.

TSTA Overview

TSTA comprises four categories of systems: (1) the main DT process flow loop; (2) environmental and safety systems; (3) general support systems; and (4) the physical plant. These have been fully described elsewhere,[1-2] so the present discussion is limited to current status of systems completed or under active development. The general layout of systems within the Los Alamos TSTA facility is shown in Fig. 1, and Fig. 2 is a photograph of the refurbished building.

Environmental Systems

Because no objectives of TSTA are more important than those relating to operational and environmental safety, we plan that all environmental systems will be installed, tested, and proven functional before tritium is introduced into the main flow loop. Funding was phased to install these systems and their support facilities first, and work on the major environmental systems is now essentially complete.

Ventilation (VEN)

The 2-zone ventilation system has been installed, checked out and put into operation. The 3rd stage of ventilation will be provided by a nitrogen-atmosphere glove-box system, which will be modular and will enclose all major DT-gas processing systems. Fig. 2 shows the stack and external ventilation ductwork installed.

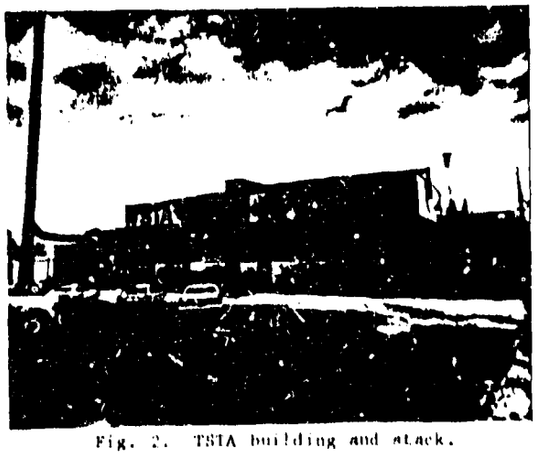

Fig. 2. TSTA building and stack.

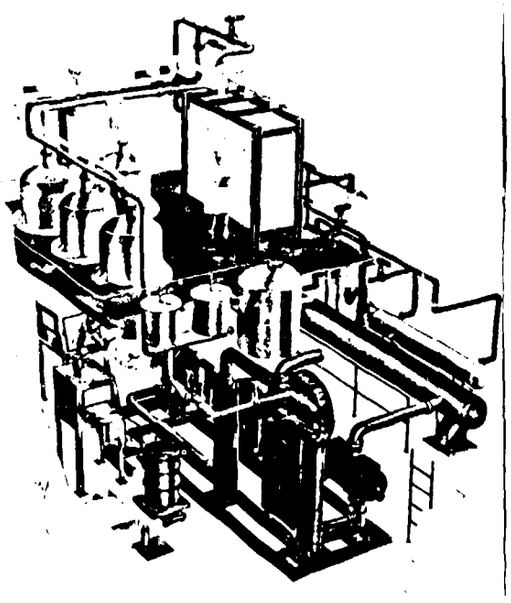

Fig. 3. TSTA Emergency Tritium Cleanup (ETC).

Emergency Tritium Cleanup (ETC)

The ETC at TSTA, which is designed to contain and recover essentially all tritium following any accidental release, incorporates several new concepts.[3] This system has been installed in the TSTA building and has been connected to the ventilation system. An artist's concept is shown in Fig. 3. Because of the immense processing capacity of ETC, it occupies a significant fraction of the available space at TSTA and accounts for a major portion of TSTA expenditures.

Tritium Waste Treatment (TWT)

This system, which collects and detritiates all gaseous TSTA waste streams before they reach the exhaust stack, is based on a design which has been successfully operated at LASL for five years.[4] The TSTA-TWT is now installed and needs only be interfaced to the TSTA Master Data Acquisition and Control (MDAC) system for testing. Fig. 4 is an isometric of the major components of TWT.

Main Process Systems

Plasma Chamber Evacuation (VAC)

All major components of this system have been purchased. The first cryopump with separate, independently temperature-controlled cryopanels for DT and helium (Fig. 5) was designed,

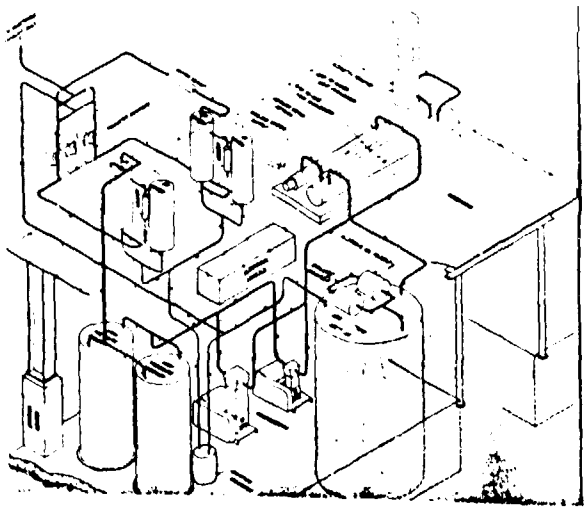

Fig. 4. TSTA Tritium Waste Treatment (TWT).

assembled, and tested at LASL.[5] Two additional cryopumps,[6-7] using alternative sorbents for pumping the helium part of the gas load, have been delivered to LASL, and all 3 pumps are being tested to evaluate their suitability for TSTA, the Engineering Test Facility (ETF) and magnetic fusion vacuum systems in general. The simulated torus, cryopanel regeneration system, and other components of VAC are being installed (Fig. 6).

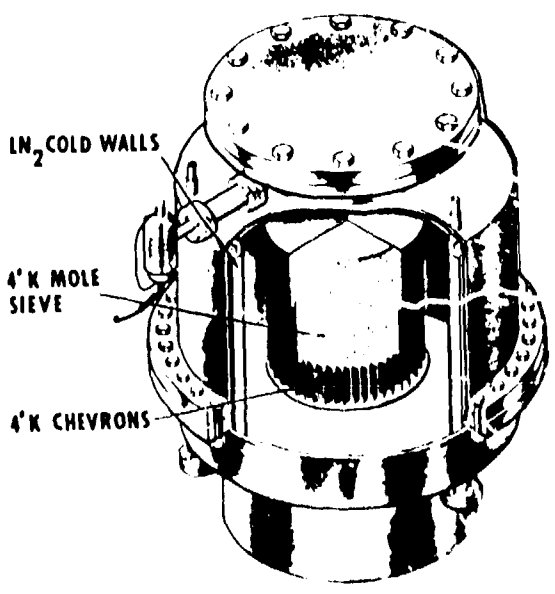

Fig. 5. TSTA Prototype compound cryopump.

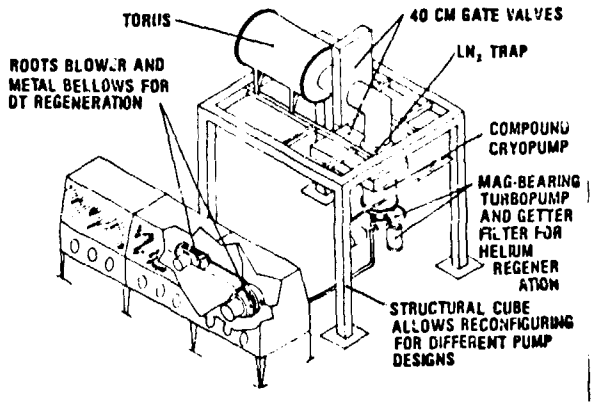

Fig. 6. TSTA plasma chamber vacuum system (VAC).

Isotope Separation (ISS)

A 4-column, cryogenic isotopic distillation system,[8-9] designed to provide product streams of pure deuterium and tritium, refueling-grade DT, and environmental-quality HD waste, has been built for TSTA by Arthur D. Little, Inc. This system, complete with cryogenic refrigeration and microprocessor control, was delivered to LASL and installed at TSTA during the summer of 1980. Preliminary runs have been made with hydrogen and deuterium to verify the validity of the design and stability of the control system. Fig. 7 is an accurate conceptual representation of this system.

Fuel Cleanup (FCU)

We have run experiments that establish that adsorption at liquid-nitrogen temperature reduces condensable impurities to less than 1 ppm. We subsequently designed an FCU package that combines alternately used catalytic-reactor and

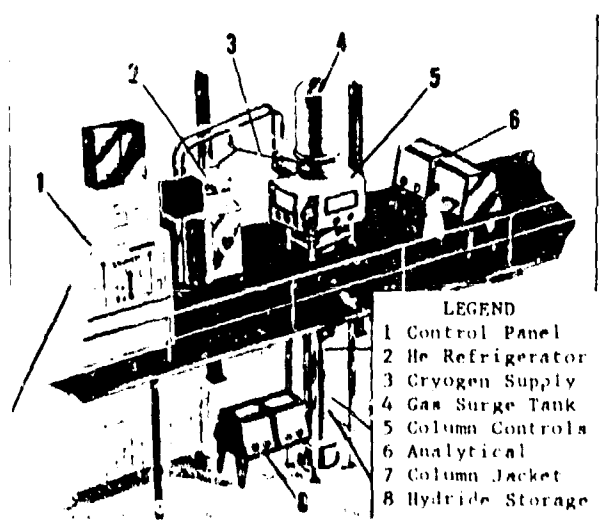

Fig. 7. TSTA Isotope Separation System (ISS).

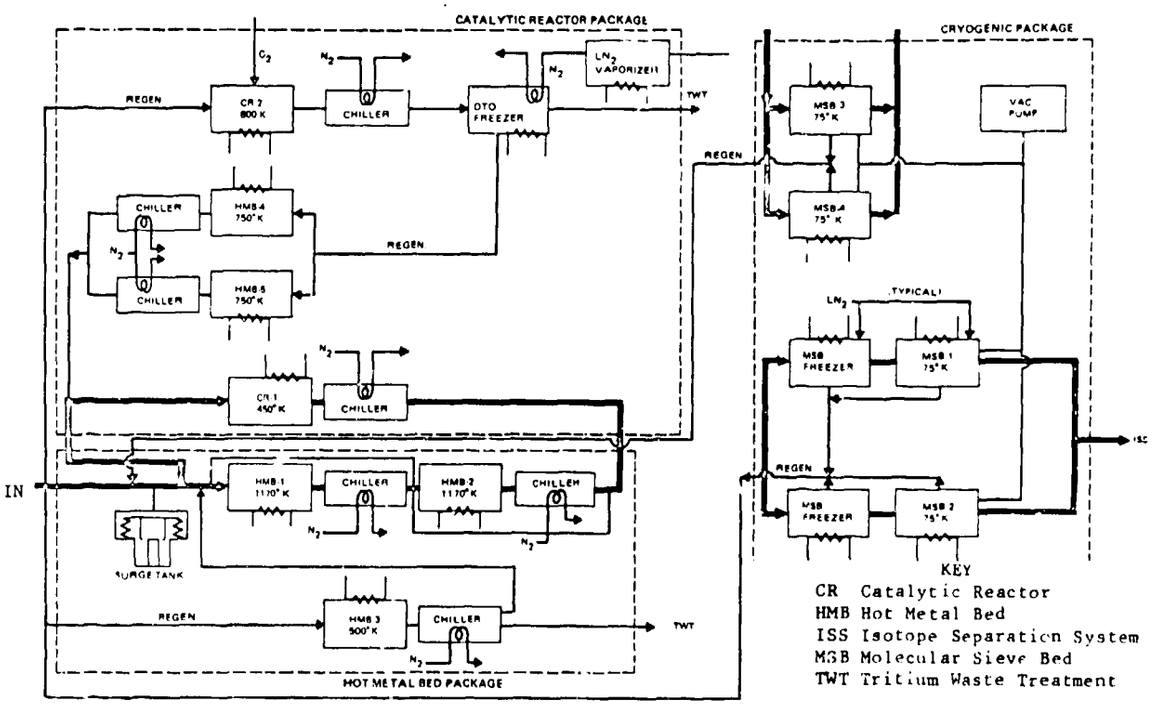

Fig. 8. TSTA Fuel Clean-Up Module (Schematic).

hot-uranium front ends with a cryogenic-adsorber second stage[10]. All sections of FCU provide for regeneration and recovery of hydrogen isotopes back into the mainstream flow. Fig. 8 is a simplified schematic of FCU, which is being fabricated for TSTA by Grumman Aerospace Corp., and will be delivered and installed in 1981.

Transfer Pumping (TPU)

Throughout the main fuel-processing loop, many tritium-gas transfer pumps are required to generate flows and pressures for chemical processing. Pressures range from high vacuum to 2 atm abs. This requirement for tritium-compatible transfer pumps[11-12] has been previously addressed, and we have been able to purchase and modify various commercial pumps to meet our requirements at TSTA. Modifications were required to eliminate tritium-incompatible materials or improve leak integrity, and every recognized requirement for pumps has now been met. The LASL-modified commercial pumps include an all-metal reciprocating-bellows pump, a canned-motor, Ferrofluid-sealed Roots blower, and a bellows-sealed, spiral-cavity, high-vacuum blower.

Master Data and Control System (MDAC)

An important objective of TSTA is to demonstrate integrated control of many interrelated systems it comprises. Units requiring reliable real-time control include the DT-processing modules as well as the many environmental and safety systems, which must come on-line automatically when needed. A comprehensive computer-based control system is the only practicable way to accomplish this task. A Data General Eclipse minicomputer system has been purchased and installed in the TSTA control room (Fig. 9). The hardwired control lines have been installed and FORTRAN software is being written for some operational TSTA systems.

Fig. 9. TSTA control room.

Conclusion

Many technical problems addressed early by the TSTA staff have now been resolved. Fabrication and installation of the major environmental systems are essentially complete, and assembly of the main process loop systems is proceeding on schedule. Within two years TSTA will start generating operational data that should be valuable to design teams of the Engineering Test Facility (ETF).

References

1. J. L. Anderson, "The Tritium Systems Test Assembly at the Los Alamos Scientific Laboratory," Proc. Top. Mtg. Techn. of Controlled Nuclear Fusion, 3rd, Santa Fe, NM, May 9-11, 1978 (CONF-780508), Vol. 2, 674.

2. J. L. Anderson, "Design and Construction of the Tritium Systems Test Assembly," Proc. Top. Mtg. Tritium Techn. in Fission, Fusion, and Isotopic Applications, Dayton, OH, Apr. 29 - May 1, 1980 (CONF-800427), 341.

3. M. E. Miller, "Conceptual Design of an Emergency Tritium Clean-up System," Proc. Top. Mtg. Techn. of Controlled Nuclear Fusion, 3rd, Santa Fe, NM, May 9-11, 1978 (CONF-780508), Vol. 2, 720.

4. J. L. Anderson, F. A. Damiano, and J. E. Nasise, "Tritium Handling Facilities at the Los Alamos Scientific Laboratory," Proc. Conf. Remote Systems Techn., 23rd, San Francisco, 1975 (ANS, Hinsdale, IL, 1975), 77.

5. D. O. Coffin and C. R. Walthers, "Vacuum Pumping of Tritium in Fusion Power Reactors," Proc. Symp. Prob. of Fusion Research, 8th, San Francisco, Nov. 13-16, 1979 (IEEE, New York, 1979) Vol. 1, 513.

6. T. H. Batzer, R. E. Patrick and W. R. Call, "A TSTA Compound Cryopump," to be published in J. Vac. Sci. Techn., 1981.

7. H. C. Hseuh and H. A. Worwetz, "The Performance of BNL-TSTA Cryopump," to be published in J. Vac. Sci. Techn., 1981.

8. J. R. Bartlit, R. H. Sherman, and W. H. Denton, "Hydrogen Isotope Distillation for the Tritium Systems Test Assembly," Proc. Top. Mtg. Techn. of Controlled Nuclear Fusion, 3rd, Santa Fe, NM, May 9-11, 1978 (CONF-780508), Vol. 2, 778.

9. J. R. Bartlit, R. H. Sherman, R. A. Stutz, and W. H. Denton, "Hydrogen Isotope Distillation for Fusion Reactors," Cryogenics, 19, 275 (1979).

10. E. C. Kerr, J. R. Bartlit, and R. H. Sherman, "Fuel Cleanup System for the Tritium Systems Test Assembly; Design and Experiments," Proc. Top. Mtg. Tritium Techn. in Fission, Fusion and Isotopic Applications, Dayton, OH, Apr. 29 - May 1, 1980 (CONF-800427), 115.

11. C. L. Folkers and V. T. Gede, "Tritium Transfer Operations--A Review," Proc. Conf. Remote Systems Techn., 23rd, San Francisco, 1975 (ANS, Hinsdale, IL, 1975), 55.

12. D. O. Coffin, "High Pressure Tritium Equipment," Proc. Conf. Remote Systems Techn., 24th, Washington, D.C., 1976 (ANS, Hinsdale, IL, 1976), 8.