PORTIONS
OF THIS
OCUMENT
ARE
LLEGIBLE

LA-UR-81-655

TITLE: DC POWER SYSTEM FOR FMIT DEUTERON ACCELERATOR

MASTER

AUTHOR(S): Kenneth O. Creek and Donald J. Liska

SUBMITTED TO: Particle Accelerator Conference
Washington, DC March 11-13, 1981

DISCLAIMER

By acceptance of this article, the publisher recognizes that the U.S. Government retains a nonexclusive, royalty-free license to publish or reproduce the published form of this contribution, or to allow others to do so, for U.S. Government purposes.

The Los Alamos Scientific Laboratory requests that the publisher identify this article as work performed under the auspices of the U.S. Department of Energy

University of California

LOS ALAMOS SCIENTIFIC LABORATORY
Post Office Box 1663 Los Alamos, New Mexico 87545
An Affirmative Action/Equal Opportunity Employer

Form No. 836 R3
St. No. 2629
12/78

UNITED STATES
DEPARTMENT OF ENERGY
CONTRACT W-7405-ENG-36

DC POWER SYSTEM FOR DEUTERON ACCELERATOR*

K. O. Creek** and D. J. Liska
Los Alamos National Laboratory, Los Alamos, New Mexico 87545

Summary

The Fusion Materials Irradiation Test (FMIT) Facility dc power system provides excitation current for all linac and High-Energy Beam Transport (HEBT) quadrupole and bending magnets, excitation for horizontal and vertical beam steering, and current-bypass shunts.

Linac Quadrupole Excitation

The linac assembly of the FMIT accelerator contains 77 quadrupoles requiring dc excitation. Four quadrupole designs are employed, requiring maximum current ranging from 590 A to 1200 A. The voltage across each quad is approximately 10 V. The first five quadrupoles are a separate design; they match the beam from the radio-frequency quadrupole (RFQ) into the first linac tank, each requiring different operating gradients and currents. Separate power supplies rated at 1200 A and 25 V are assigned to each of the first five quadrupoles. The remaining 72 will be excited in adjacent series groups of five, or less, connected to one power supply. These identical power supplies are rated at 60 V and 1000 A with 45-V and 30-V taps. Nineteen are required to power the remaining 72 quadrupoles.

Adjusting the quad currents in groups of five or less will provide sufficient beam adjustment without current-bypass shunting of individual quadrupoles in the group.

However, shunts will be installed for current trimming of quadrupoles at beam-emittance matching areas where the two tanks join, and at the end of the second tank. A block diagram of the linac dc power units is shown in Fig. 1.

*Work performed under the auspices of the US Department of Energy
**Hanford Engineering Development Laboratory employee at Los Alamos.

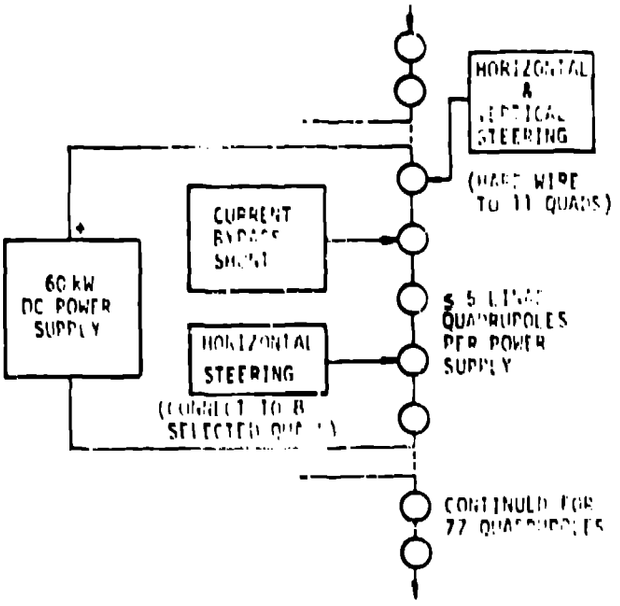

Fig. 1. Linac dc power, shunt and steering.

The 60-kW linac constant-current power supplies are regulated to ± 0.1% of full-scale current for expected variations in line voltage, load, ambient temperature, and long-term drift. The power supplies are air-cooled. Output current is computer controlled by a 0- to +10-V dc signal from a D/A converter. The computer starts and stops the power supplies, and monitors output current and malfunctions. An overriding "local" control duplicates these functions. The "computer-local" selection is located at the power supply.

Each power supply will automatically shut off under the following conditions: (1) overcurrent in line contactor, (2) high temperature in the power supply, (3) low impedance to ground in the load, and (4) loss of water cooling or high temperature at the magnet loads.

The dc power loop is grounded at only one point, through a 10-Ω resistor at the power supply. A meter relay is connected in parallel with the resistor and provides an indication and alarm contact for ground fault current in the magnet loads.

Deterioration of magnet wire insulation, current leaking across the water breaks, and any other cable or connector fault to ground can be seen on the meter. The ground fault detection circuit is shown in Fig. 2.

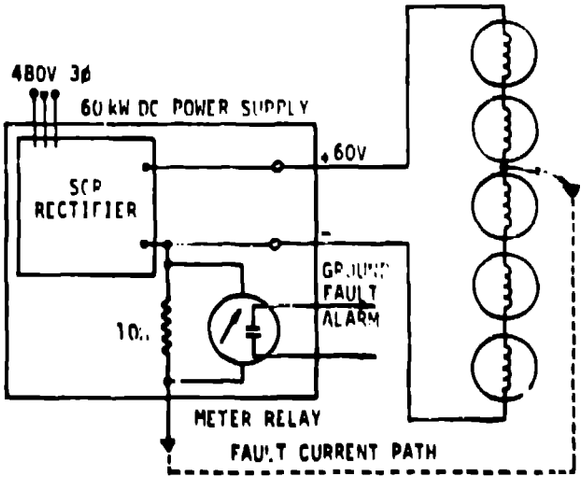

Fig. 2. Ground fault detection.

Shunts

Current-bypass shunts are connected in parallel with quadrupoles that require less operating current than adjacent magnets, when the group of magnets are powered in series with one main power supply. The shunts are rated at 100 A or less. The shunt current will be controlled by a computer signal or by local current control. The current control signal is compared to the shunt current, and the error is used to bias power transistors to carry the required current. Fixed power resistors will be installed in parallel with the controlled shunt to expand the shunt range as required. A typical shunt circuit is shown in Fig. 3.

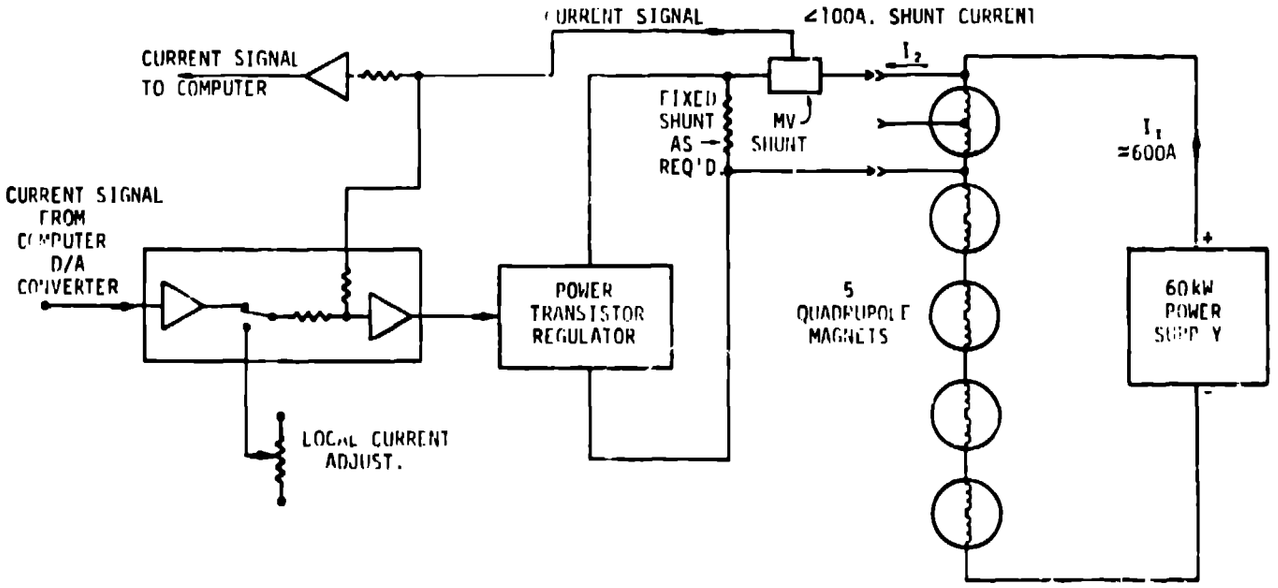

Fig. 3. Linac quadrupole magnet shunt.

Horizontal and Vertical Steering

Permanently connected horizontal and vertical beam steering is installed in the first five linacs quadrupoles, in two at the center of each of two tanks, and in two at the tank intersection. Steering is accomplished by winding small auxiliary coils on the pole tips of the chosen quadrupoles. The opposite coils are connected in series and powered by a bipolar power supply and regulator shown in Fig. 4. This system will supply current in both directions with smooth, continuous-current control through zero. The bipolar supply is composed of two power supplies connected so as to supply opposite polarities. Two power-transistor regulators are used to supply positive or negative current to the steering-coil windings as required. The control signal for the regulators is developed from a comparison of the set-point signal and the current in the steering coils.

Horizontal and vertical steering will be computer-controlled or manually controlled. Because the quadrupole poles are at 45° from the horizontal, a horizontal or vertical beam-steering command must be resolved by the computer into two current vectors at 45° for the steering coils.

Steering coils are electrically separate from the main quadrupole windings, from each other, and from ground; therefore, the same two power supplies may be used to excite eight pairs of steering windings in four quadrupoles. Steering winding pairs produce 600 A-turns of steering and are rated at 30 A and 2 V.

Selected Horizontal Steering

Additional horizontal steering will be provided at any selected linac quadrupoles by connecting the bipolar power-supply/shunting system of Fig. 5 to the

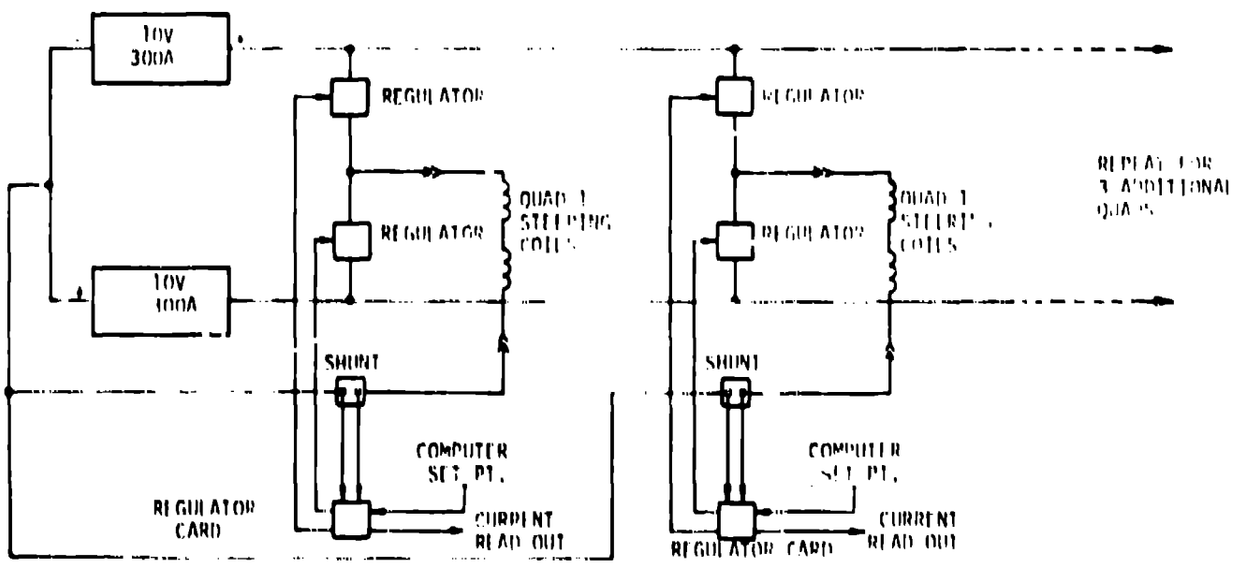

Fig. 4. Horizontal and vertical steering.

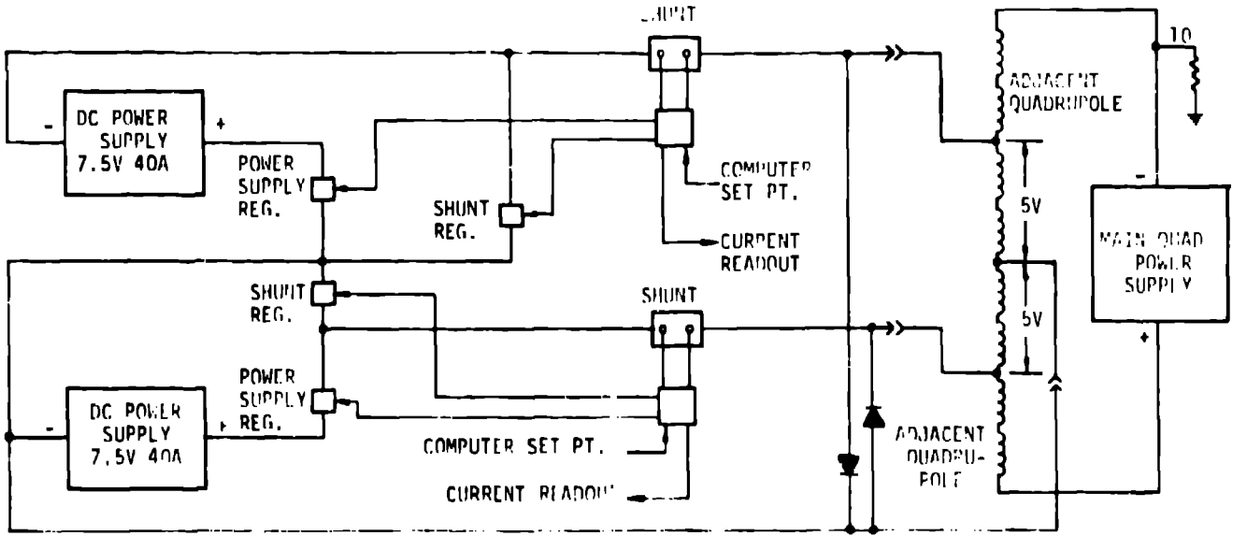

Fig. 5. Selected horizontal steering.

main windings of the selected quadrupole. Horizontal steering is accomplished by adding current to two quad windings and subtracting an equal amount of current from the other two windings.

Additional current is injected into two coils from the power supply by a power-transistor regulator while current is shunted around the other two coils by a power transistor regulator shunt. Both regulators are controlled by circuits that compare the current in the magnet coils to the current set point.

Current set points are received from the computer D/A converter through isolation, or from local current adjustments. This system of power supplies and shunt regulators will provide steering in both directions with smooth continuous control through zero as the coils are transferred from a current source to a current sink. Eight sets of horizontal steering circuits will be available for connection to eight possible quads throughout the linac.

HEBT Power Supplies

Forty-one HEBT quadrupoles, one switching magnet, and six bending magnets require dc excitation in the HEBT. The quadrupoles require current ranging from 800 to 1000 A maximum, at approximately 25 V each. Sixteen of the same 60-kW power supplies used for the linac are used to power the HEBT quadrupoles in pairs (using the 60-V tap) or singly (using the 30-V tap), as shown in Fig. 6.

Because only one of the two beamlines after the switching magnet will be used at a time, one set of power supplies for one beamline will be installed and then switched to the beamline magnets that are to be operated.

The switching magnet and the three bending magnets in one beamline are supplied in series by one power supply. This power supply is also switched to the beamline that is to be operated; as part of the switching, the connections to the switching magnet are reversed in polarity to direct the beam to the beamline that is to be operated.

The two quadrupoles immediately following the switcher and each bender magnet are powered in groups of four, on one power supply. The four vertical focusing magnets are powered in series from one supply, and the four horizontally focusing magnets are powered in series from the other supply. These supplies will be switched from one beamline to the other.

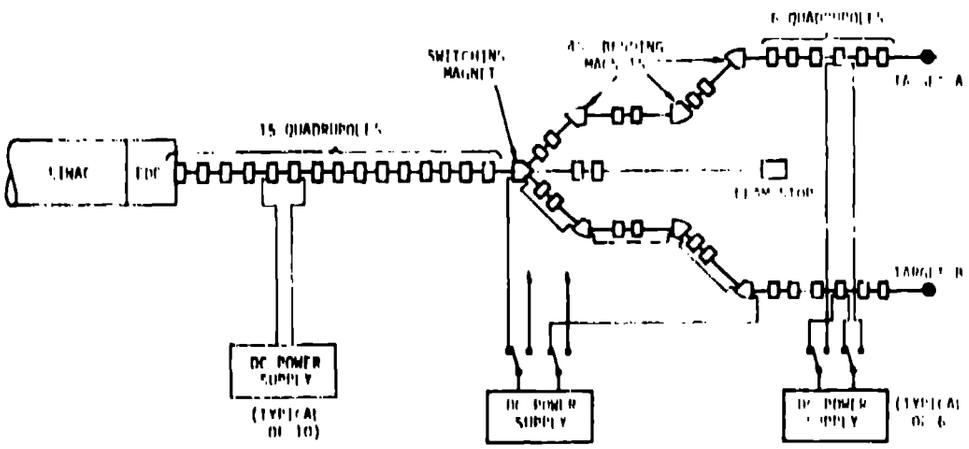

Fig. 6. HEBT dc power.