LA-UR -84-1395

CONF

CONF-8404138--3

Los Alamos National Laboratory is operated by the University of California for the United States Department of Energy under contract W-7405-ENG-36

TITLE FIBER OPTIC SENSOR APPLICATIONS IN FIELD TESTING

LA-UR--84-1395

DE84 011364

AUTHOR(S) J. A. Perea, WX-10

SUBMITTED TO 1984 Mexican American Engineering Symposium, Albuquerque, NM, April 11-13, 1984

DISCLAIMER

This report was prepared as an account of work sponsored by an agency of the United States Government. Neither the United States Government nor any agency thereof, nor any of their employees, makes any warranty, express or implied, or assumes any legal liability or responsibility for the accuracy, completeness, or usefulness of any information, apparatus, product, or process disclosed, or represents that its use would not infringe privately owned rights. Reference herein to any specific commercial product, process, or service by trade name, trademark, manufacturer, or otherwise does not necessarily constitute or imply its endorsement, recommendation, or favoring by the United States Government or any agency thereof. The views and opinions of authors expressed herein do not necessarily state or reflect those of the United States Government or any agency thereof.

MASTER

By acceptance of this article the publisher recognizes that the U S Government retains a nonexclusive royalty-free license to publish or reproduce the published form of this contribution or to allow others to do so, for U S Government purposes

The Los Alamos National Laboratory requests that the publisher identify this article as work performed under the auspices of the U S Department of Energy

Los Alamos Los Alamos National Laboratory
Los Alamos, New Mexico 87545

FORM NO 836 R4
ST NO 2629 5/81

DISTRIBUTION OF THIS DOCUMENT IS UNLIMITED

FIBER OPTIC SENSOR APPLICATIONS IN FIELD TESTING

by

J. A. Perea

Los Alamos National Laboratory

ABSTRACT

Fiber optic sensors (F.O.S) are defined, and the application of this technology to measuring various phenomonon in diverse and hostile environments are discussed. F.O.S. advantages and disadvantages both technically and operationally are summarized. Three sensor techniques - intensity, interferometric, and polarization - are then discussed in some detail.

General environmental instrumentation and controls that support the Nuclear Weapons Test Program at the Nevada Test Site are discussed next to provide the reader with a basic understanding of the programmatic task. This will aid in recognizing the various difficulties of the traditional measurement techniques at the NTS and the potential advantages that fiber optic measurement systems can provide.

An F.O.S. development program is then outlined, depicting a plan to design and fabricate a prototype sensor to be available for field testing by the end of FY84. We conclude with future plans for further development of F.O.S. to measure more of the desired physical parameters for the Test Program, and to eventually become an integral part of an overall measurement and control system.

I. INTRODUCTION

Optical fibers, which were originally developed for communications, have been extensively used in the commercial telecommunications market. Their use has also been successfully demonstrated in a number of recent experiments for data transmission applications in support of the Nuclear Weapons Test Program conducted by the Los Alamos National Laboratory[1]. Their advantages over wire cable are well established and include small size and weight, high bandwidth, freedom from electromagnetic interference, cross talk and ground loops. Low attenuation, potential low cost, and use in hazardous environments where chemically reactive metallic wires cannot be used are also properties making glass fibers an attractive technology for many applications. Factors that have inhibited a more accelerated growth in the use of fiber optics have been relative lack of optical hardware and lack of confidence in their use. The communications industry is rapidly removing the hardware limitations and confidence is being gained as experience is built up over years of field use. Researchers in telecommunications soon became aware that fibers were sensitive to external physical phenomena. It was eventually realized that these characteristics would enable fibers to be used as a transduction mechanism. During recent years, extensive research has been carried out to create electrically passive optical tranducers compatible with the new fiber optic transmission capabilities. These transducers, commonly called fiber optic sensors (F.O.S.), and their application to the Los Alamos Test Program will be discussed in this paper.

II. FIBER OPTIC SENSOR THEORY

A. Fundamental Transduction

A fiber can be used to measure many physical perturbations, including mechanical, electrical, magnetic, thermal, radiation and chemical phenomena. These physical fields modulate the light propagating through glass fibers in two basic ways: intensity and phase difference. The modulation and monitoring of these two parameters comprise the principal transduction mechanism used in fiber optic sensors. The modulation effect that is measured in the fibers is caused by a change in the optical properties of the fiber itself. These optical properties include refractive index, absorption, and flourescence. A mechanical force, for example, will induce stress birefringence in the fiber, which is caused by the strain transforming the refractive index of the glass and the absorbtion (light loss) inherent in the glass.

In the case of the intensity modulation, the physical perturbation interacts with the fiber or some device attached to the fiber to directly vary the light propagation properties of the fiber and hence, the optical intensity transmitted. Phase modulation occurs when coherent light propagating through a section of single mode fiber is impacted by an energy field. The detection of these phase shifts in the light waves is achieved with optical interferometric techniques.

Table I, taken from reference 2, summarizes the modulation effect and associated change induced in the fiber caused by various physical parameters. We will now discuss three categories of sensors, including the applicable modulation schemes.

Table I. Optical Phenomena for Modulation of Light in an Optical Fiber (n = refractive index change; a = absorption change; e = fluorescent change).

	Physical Parameter to be Measured	Modulation Effects in Optical Fibers	
F	Mechanical Force	Stress Birefringence	n,a
P	Pressure	Piezo-Optic Effect	n
Δl	Deformation	Piezoabsorption	a
Δd	Density Change	Triboluminescence	e
E	Electric Field	Electro-Optic Effect	n
D	Dielectric Polarization	Electrochromism	a
i	Electric Current	Electroluminescence	e
H	Magnetic Field	Magneto-Optic Effect	n
M	Magnetic Polarization	Faraday Effect	n
		Magneto-Absorption	a
T	Temperature	Thermal Effects	n,a,e
		Thermoluminescence	e
Photo Flux		Defect Production	a,n
X- and γ-rays		Radiation Induced	e
Nuclear Flux		Luminescence	
Chemical Composition Changes		Absorption and Index Changes	a,n
Phase Transition		Chemoluminescence	e

B. Intensity Sensors

The advantages of intensity sensors are the simplicity of construction, hence ruggedness for field use, and compatibility with multimode fiber technology. Sensitivity is the major drawback to this class of sensor. Most applications, however, do not require extreme sensitivity, enabling these devices to be quite competitive. Intensity sensors have been used that measure displacement, strain, pressure, temperature, and radiation.

The basic configuration for an intensity sensor is shown in Fig. 1. An incoherent optical source, such as an LED, may be used to launch the light wave into a multimode fiber. The transmission fiber links the source to the sensor and the sensor to the detector. The detector converts the optical signal to an electrical signal to be monitored and/or recorded. The sensing element itself typically consists of one or two multimode fibers or some transduction element that converts the impinging force field to an optical signal.

A variety of intensity transduction mechanisms have been designed, each with various advantages and disadvantages. Due to limited space, we will illustrate only one of these mechanisms, but one which is a good representative, lending itself to versatility, broad parameter measurements, and frequent incorporation in measuring systems.

Consider the microbend intensity sensor shown in Fig. 2. This transduction mechanism is based on the microbend-induced ejection of light from the core of a fiber into the cladding. The transduction element consists of a deforming device such as a pair of serated plates that implant small bends in the fiber. The distance L between adjacent ridges defines the spatial frequency of the deformer. When the force impacting the device is applied, the amplitude of the deformations is increased. The process of light ejection from the core to cladding due to bends is illustrated in Fig. 3. Light rays propagating in a straight section of the fiber at an angle less than the critical angle may have their angle of incidence on the core-cladding interface

FIBER OPTIC SENSOR

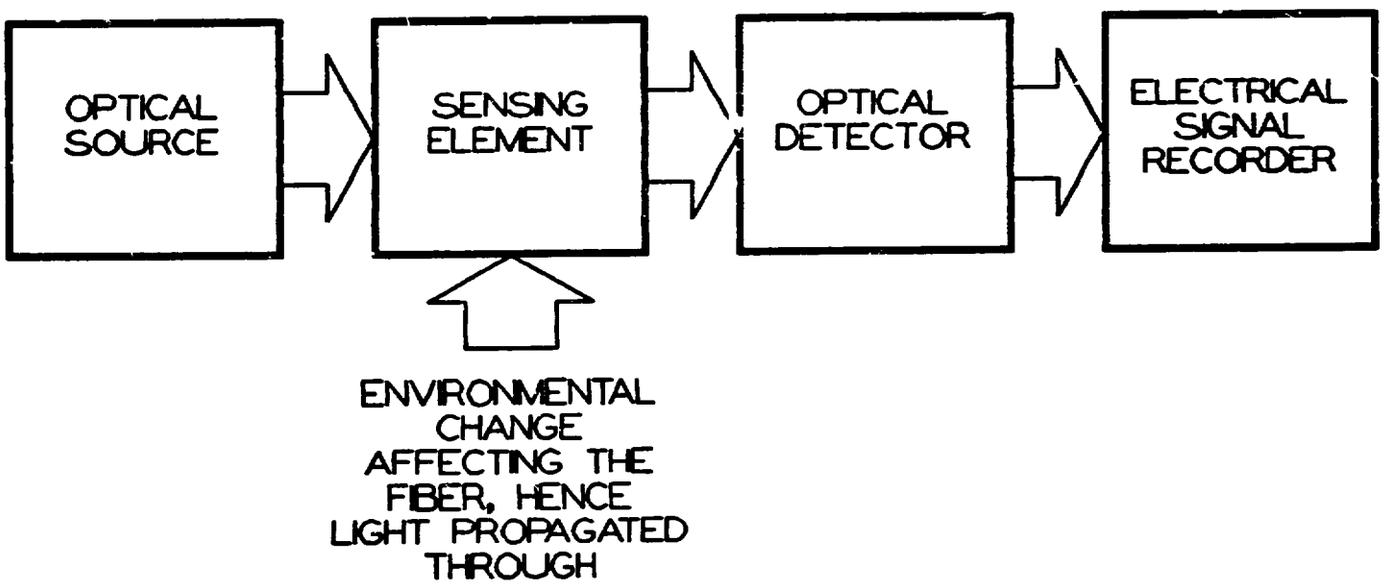

Figure 1

MICROBEND SENSOR

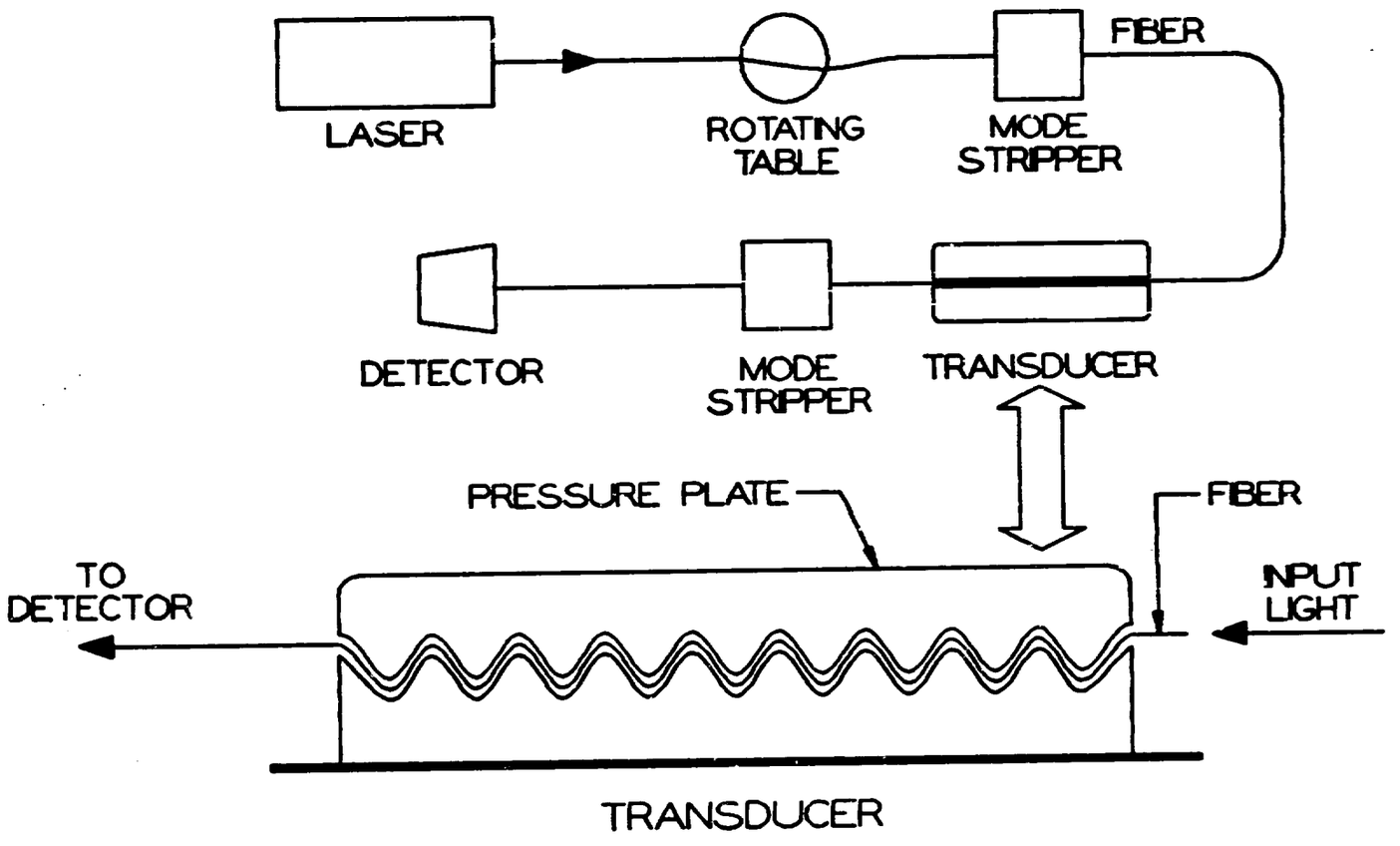

Figure 2

CORE-CLADDING COUPLING

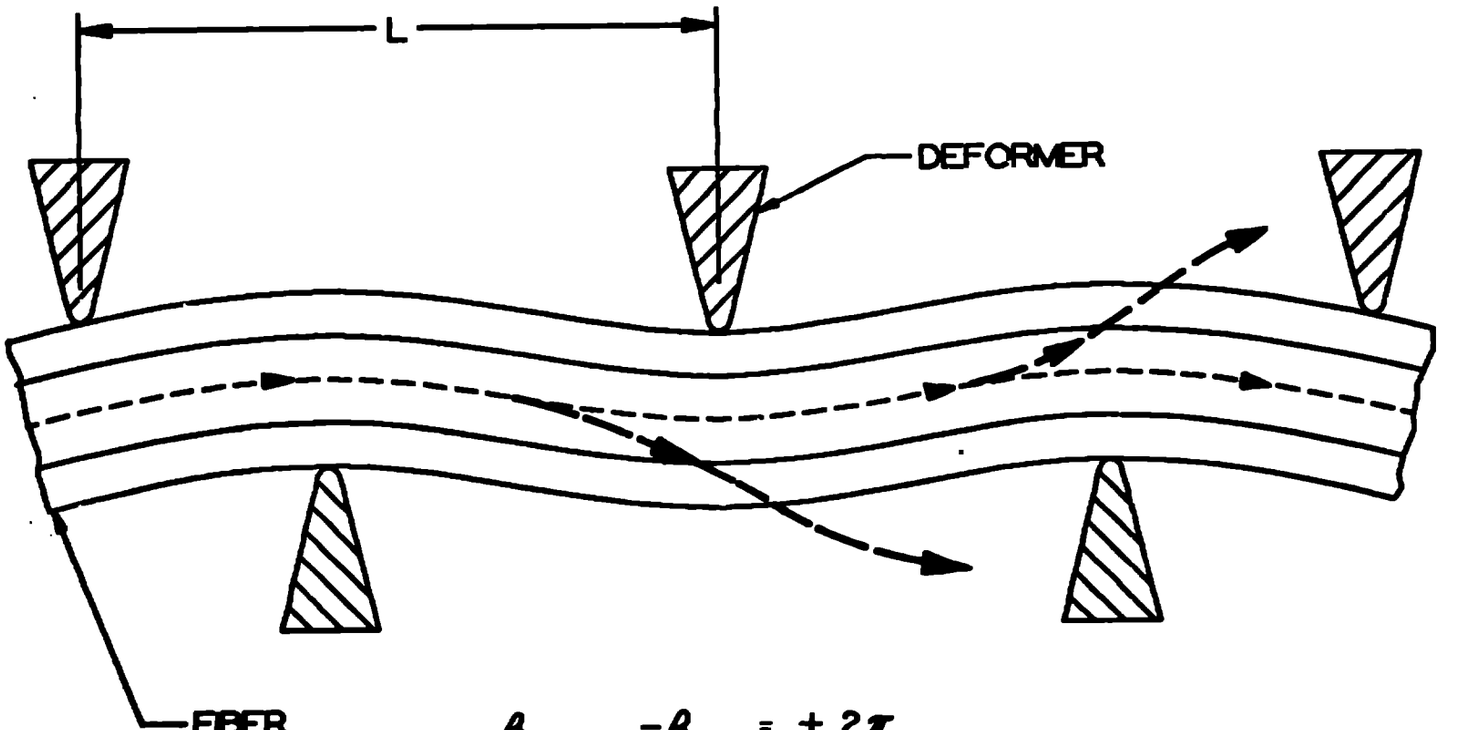

$$\beta_{CORE} - \beta_{CLAD} = \pm \frac{2\pi}{L}$$

Figure 3

increased by the bends and thus be partially transmitted in the cladding. Coupling between modes of light is strongest when the difference between the effective propagation constants of a given pair of modes, $(\beta i-\beta j)$ is equal to $2\pi/L$. This coupling is desired to increase the amount of light that is ejected to the point that small amounts of force impacting the transducer cause relatively large changes in the ejection rate. The propagation constants are defined as the refractive index times the z component of the wave vector propagating through the guide (fiber). The wave vector, of course, is related to the optical wavelength by: $k=2\pi/\lambda_0$ where λ_0 is the wavelength in a vacuum. We therefore can calculate the L for the particular wavelength of light chosen.

C. Interferometric Sensors

The interferometric or phase sensor offers the highest theoretical sensitivity for fiber sensors. Until recently, optical interferometry has been used as a laboratory research tool. With the development of fibers and components of vastly improved characteristics, e.g., laser diodes, single mode fibers, etc., this technique is being heavily investigated and tested for field measurement applications. The devices are sensitive, able to measure a displacement of 1/1000 of a Bohr orbit, have high linearity and large dynamic ranges. These results are obtained at the expense of more sophisticated and complex instrumentation.

The interferometric arrangement employed is one in which the optical phase shift induced in a fiber is compared with a signal from a reference arm. These sensors[3] generally are configured in the Mach-Zehnder arrangement shown in Fig. 4. A laser beam is split, with part of the beam being transmitted by a reference fiber and the other part transmitted through the sensing fiber that is exposed to the force field. After traveling the upper and lower paths the two beams are recombined so that they may interfere with each other at the optical detector. The

INTERFEROMETRIC SENSORS

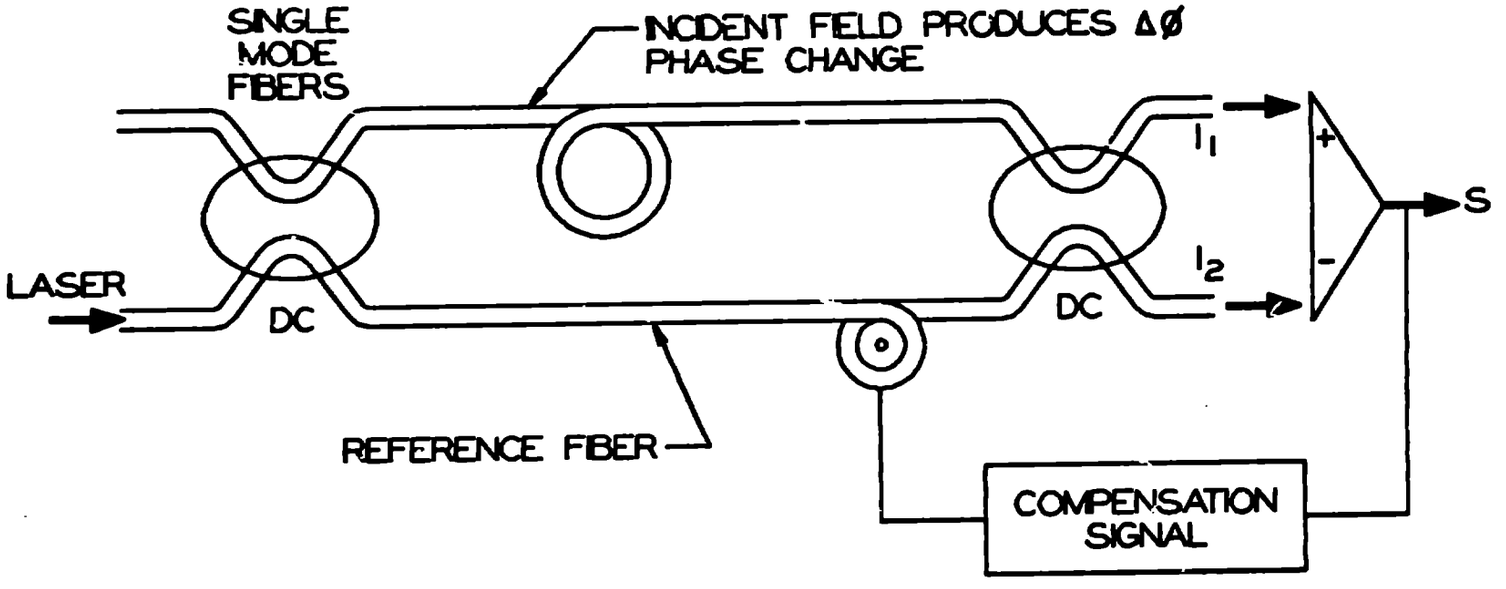

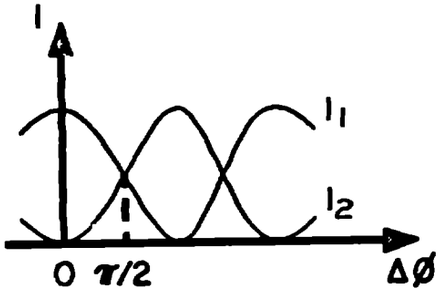

Figure 4

reference arm contains some means of modulating the phase or shifting the optical frequency. After the beams are recombined, a suitable demodulator is used to detect the original phase modulated signal.

The phase shift ($\Delta\phi$) induced by an external force on a fiber[4] is a sum of changes in length of the fiber (ΔL) and changes in the propagation constant ($\Delta\beta$) which is related to refractive index change (Δn) and fiber core radius changes (Δr). Various demodulation techniques can be used to extract these phase shifts from the optical detector, which actually is monitoring the sum intensity. The choice of technique is driven by the specific sensor application; the discussion of these is beyond the scope of this paper.

D. Polarization Sensors

Sensors employing polarization effects in fibers are less developed than intensity and phase sensors, but are being actively studied. The electric field vector of a light wave can be resolved into two mutually perpendicular components that are perpendicular to the axis of the fiber (direction of light propagation). As illustrated in Fig. 5, polarized light transmitted through an ideal, circularly symmetrical fiber would maintain its direction of polarization. The two components of the electric field can be separated and monitored for amplitude. The two components are equal in amplitude when the fiber cross section is a circle. When the cross section is an ellipse, one component travels at a higher velocity than the other and a corresponding difference in their amplitudes can be made.

As model birefringence in the fiber[5] propagates polarized light in two separate modes traveling at slightly different velocities, the direction of polarization continuously changes along the length of the fiber. This apparent rotation of polarization is enhanced or changed when the fiber is impacted by an external force field, changing both tension coiled birefringence (cylinder diameter changes) and stress birefringence (cylinder length changes). If the internal

POLARIMETRIC SENSORS

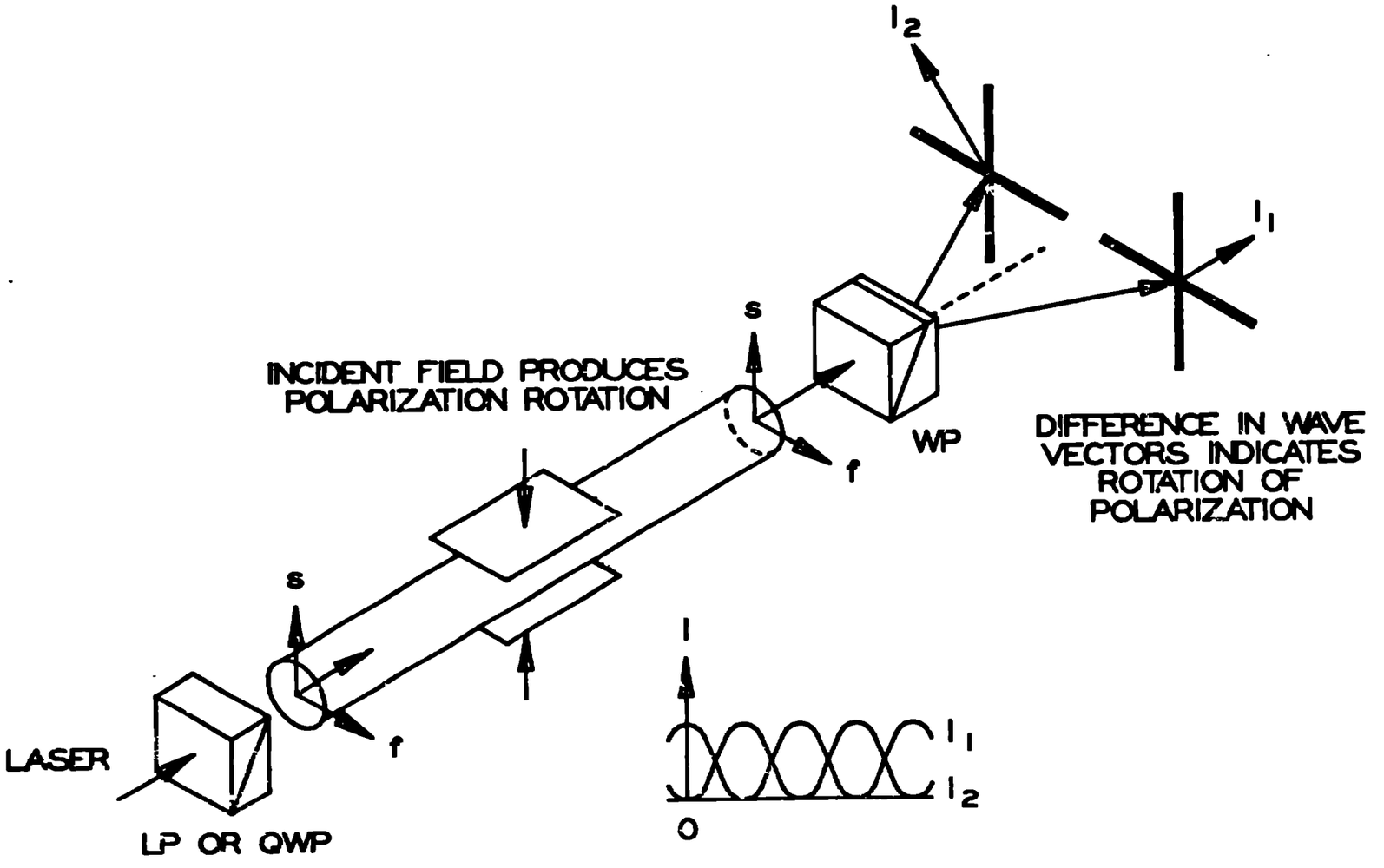

Figure 5

birefringence for the sensor configuration is properly designed, then the birefringence induced by the field effect being measured will reinforce the birefringence changes measured by the sensor system. Thus, by reading the amplitudes of the vector components, the rotation of the polarization states is observed, providing a reading of the amount of external force field.

III. APPLICATIONS IN THE NUCLEAR WEAPONS TEST PROGRAM

A. Test Support Instrumentation

The Nuclear Weapons Test Program carried out at the Nevada Test Site (NTS) is supported by the Department of Energy which contracts to the Los Alamos National Laboratory to design, build, and test prototype nuclear devices as part of an ongoing research program in support of the national defense. The Instrumentation Engineering section of the Instrumentation, Timing & Firing Group is responsible for a large class of measurement and control services necessary to suport the device diagnostic and effects experiments. These services include the monitoring of the environmental conditions which effect the performance of instruments used in the other experiments. Among the variables measured are the time dependence of temperature, pressure, displacement, acceleration, humidity, strain and radiation exposure. A drawing depicting a typical instrumentation layout is shown in Fig. 6. Conditions are monitored for days prior to the event to study the environmental effects upon system sensitivities, drift and calibration. Exact conditions at zero time are recorded to permit the application of the optimum calibration data. These conditions are monitored during and after the event to help interpret results. For example, shortly after zero time, detector packages are subjected to extreme radiation fields, rapid increases in temperature, and extraordinary mechanical shocks. Knowledge of these conditions

TYPICAL WX-10 INSTRUMENTATION LAYOUT FOR WEAPONS TEST

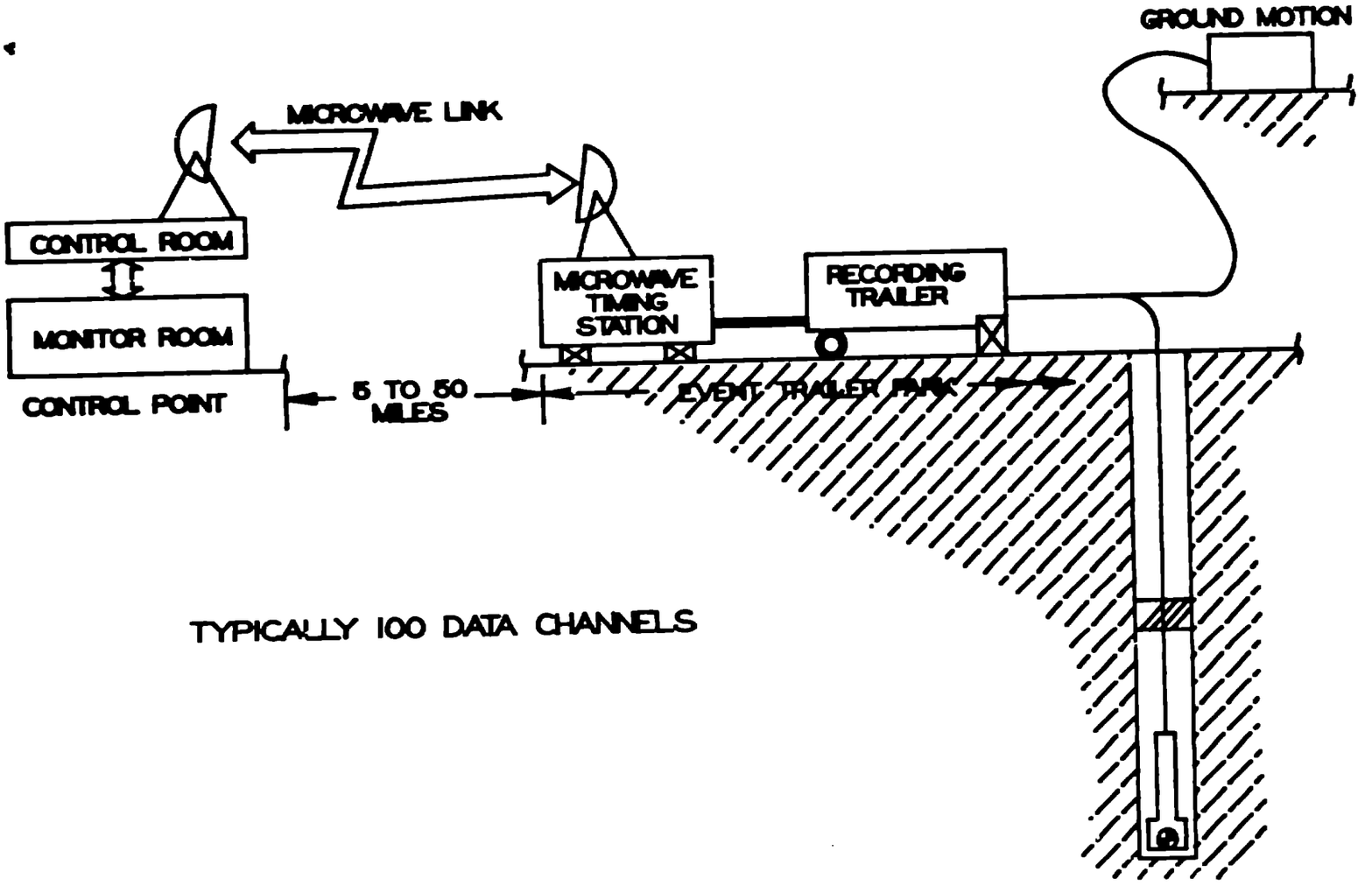

Figure 6

can permit correction of data or justify the rejection of anomalies. Further, these data then provide the basis for studies and evaluation of: 1) the containment program (ensuring neither debris nor gasses escape to the environment), and 2) the environmental and mechanical design of subsequent downhole experiments.

B. F.O.S. Applications in Instrumentation

As research in weapons becomes more sophisticated, more accurate measurements with greater temporal, spatial and energy resolution are required. These requirements, in turn, place further demands upon the supporting environmental and engineering measurements and controls. A constant research effort to exploit developing technologies to address these programmatic requirements is part of the mission of Los Alamos.

The motives for employing fiber optic technology to underground test measurements are led by a logistical problem: the large number of channels of environmental and engineering measurements and controls per event (typically 100) require a correspondingly large number of wire cables that not only are heavy and bulky but necessitate an elaborate, time consuming, expensive method of gas blocking. The gas blocking, a requirement under the U.S treaty mandating containment of all nuclear explosives products to underground locations, is a field operation that is performed on all multiconductor cable by stripping back, separating and poring epoxy around the conductors at the location(s) within the cable that is prescribed by the containment study personnel. Coaxial and fiber optic cables with built-in continuous gas blocking are available from certain suppliers, relieving a major burden on the field support organizations. As the major users of multiconductor cables, the Instrumentation Engineering section is of course very interested in developing technology that can improve this situation. F.O.S., which are directly compatible with fiber transmission systems, are therefore one of our areas of investigation. Other

motives that make F.O.S. very attractive are their inherent immunity to electromagnetic interference (EMI), which, despite elaborate attempts at isolation and shielding, causes many data records to be compromised or lost. Further, increased frequency response, and the capability of increasing sensitivity, obtaining heretofore difficult or impossible measurements, and potentially low cost, are important factors to consider. An array of fiber sensors that make appropriate measurements for different experimental objectives will enhance the overall field test operation.

IV. F.O.S. DEVELOPMENT PROGRAM

The technical approach for development of a total fiber optic system consists of the design of a fiber optic sensor and data transmission system and the laboratory demonstration of the feasibility of the sensors, followed by field testing of a prototype sensor. These objectives, coupled with establishing and increasing the F.O.S. technical knowledge base within the organization, constitute our current F.O.S. program goals.

Conceptually, a typical design would consist of a laser light source in the environmentally isolated recording station, a fiber optic link downhole to the sensor, and a second link back to the detector and a recorder, also in the trailer, as shown in Fig. 7. Ideally, the transmission links and the sensor would consist of a single continuous fiber. For initial consideration and ease of deployment, the sensing portion of fiber would rely on the local change in transmission properties (as in intensity sensors) as induced by changes in pressure, temperature, acceleration, and radiation.

FIBER OPTIC SENSOR-SCHEMATIC

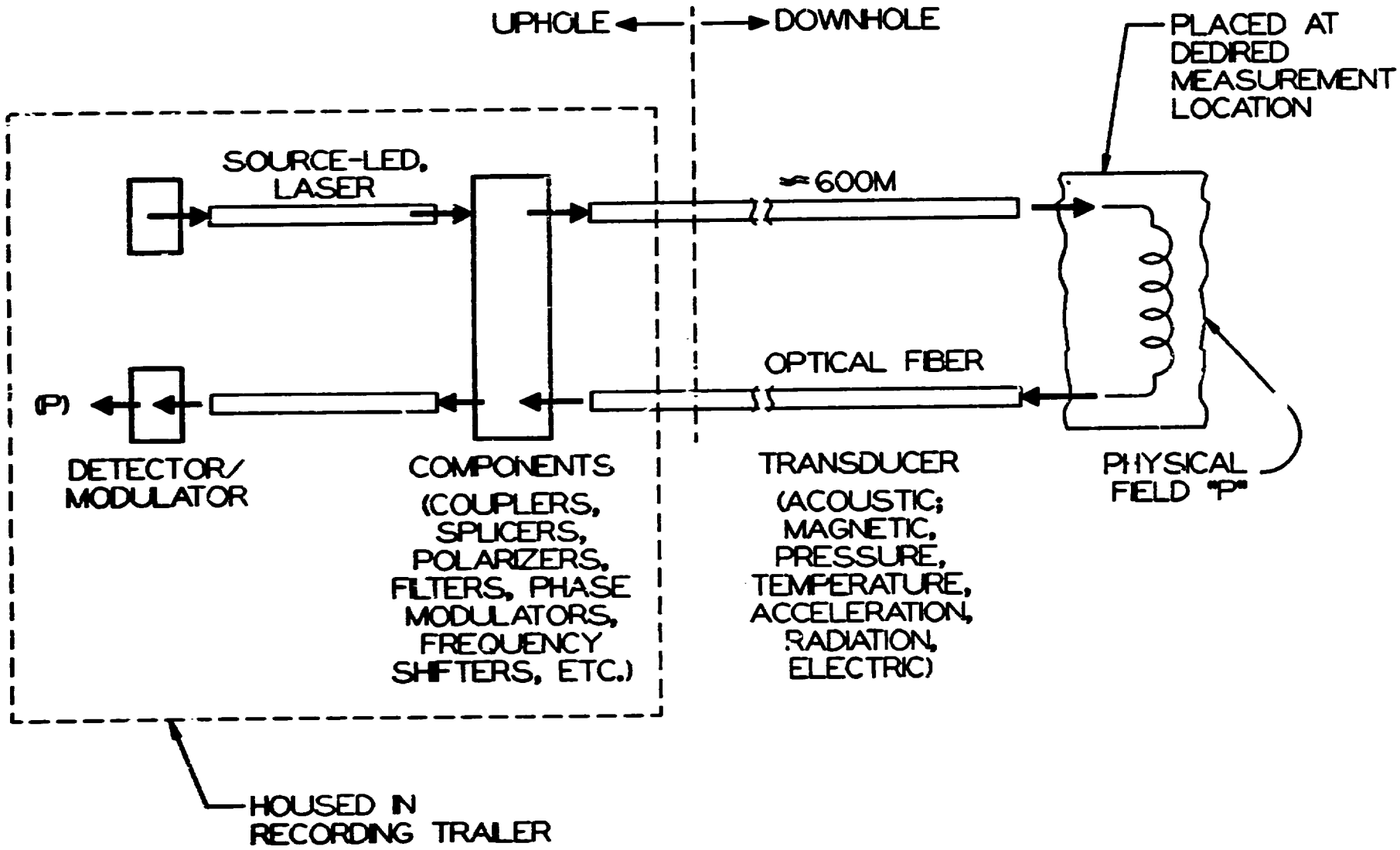

Figure 7

A. Program Plan

The F.O.S. development program plan we have constructed consists of the following:

1. Literature search, visit with F.O.S. experts.
2. Define initial meaurement.
3. Select 2 sensor configurations for design
4. Design sensor package(s).
5. Design calibration system and procedures.
6. Develop recording and storage techniques.
7. Lab test designs.
8. Fabricate prototype(s).
9. Field testing of prototype(s).
10. Refine design, further field testing.
11. Decision on production models.
12. Develop dynamic pressure sensor.
13. Branch to other parameters.
14. Plan for integration into overall measurement system.

The first three items have been completed; we are well into number four. Our goal is to complete number eight by the end of FY 1984, and begin nine as field operations allow early in FY 1985.

B. Pressure Sensor Approaches

A specific measurement that is taken on a fairly regular basis was chosen for the initial attempt at developing a fiber sensor. This measurement is a static pressure monitor of a few psi over ambient taken in an environmentally sealed box housing television cameras for an imaging experiment. Two sensor approaches are being pursued, namely, a microbend intensity sensor, and an intensity-based polarimetric sensor.

The microbend sensor will follow traditional techniques as described earlier. The crux of the problem will be designing a sensor package that not only can measure the pressure desired, but indeed only that parameter (fibers are sensitive to many

environmental changes), and to do so with uncompromising reliability. This phase of the program has just begun.

It was decided at an early time to develop two sensor configurations in parallel, thus ensuring a greater chance of furnishing a prototype that will succeed in making the measurement. The second sensor configuration being developed is illustrated in Fig. 8. The source is a laser diode that outputs a train of pulses approximately 20ns wide. The diode is connected to a multimode graded index fiber that continues downhole about 600 meters. The laser diode and detector are housed in a recording station uphole. A two-way coupler attaches the detector to the fiber, so that only one fiber is used for sending and receiving light. When the light arrives at the place of measurement, it is collimated and converted to linearly polarized light with a quarter wave polarizer. It is then refocused and launched into the sensing fiber. A plate device housing the fiber is then subjected to the pressure field, causing a rotation of the polarization as described earlier. The light is then collimated again and passed to a full wave polarizer allowing for separation of the two vector components. These are then refocused and launched into separate fibers, one with a 30ns delay. The light returns to the main transmission fiber via a three-way coupler and back to the recording station. The detector is a photo diode that converts the optical signal to electrical, which can then be monitored and recorded. Two pulses of varying amplitude are seen; these indicate the position of the polarized light in the sensing area. The delay enables easy reading of the pulses through time separation. An attractive attribute of this approach is that, as a differential measurement, all the light that is not lost through normal means is received at the detector, which is important for a long distance remote recording. This technique has been demonstrated for short distances on the bench. We are now trying to investigate various fibers for use in the sensing portion to increase the amount of light through the system. We have used single mode fiber that preserves the polarization over the short

POLARIMETRIC SENSOR SYSTEM

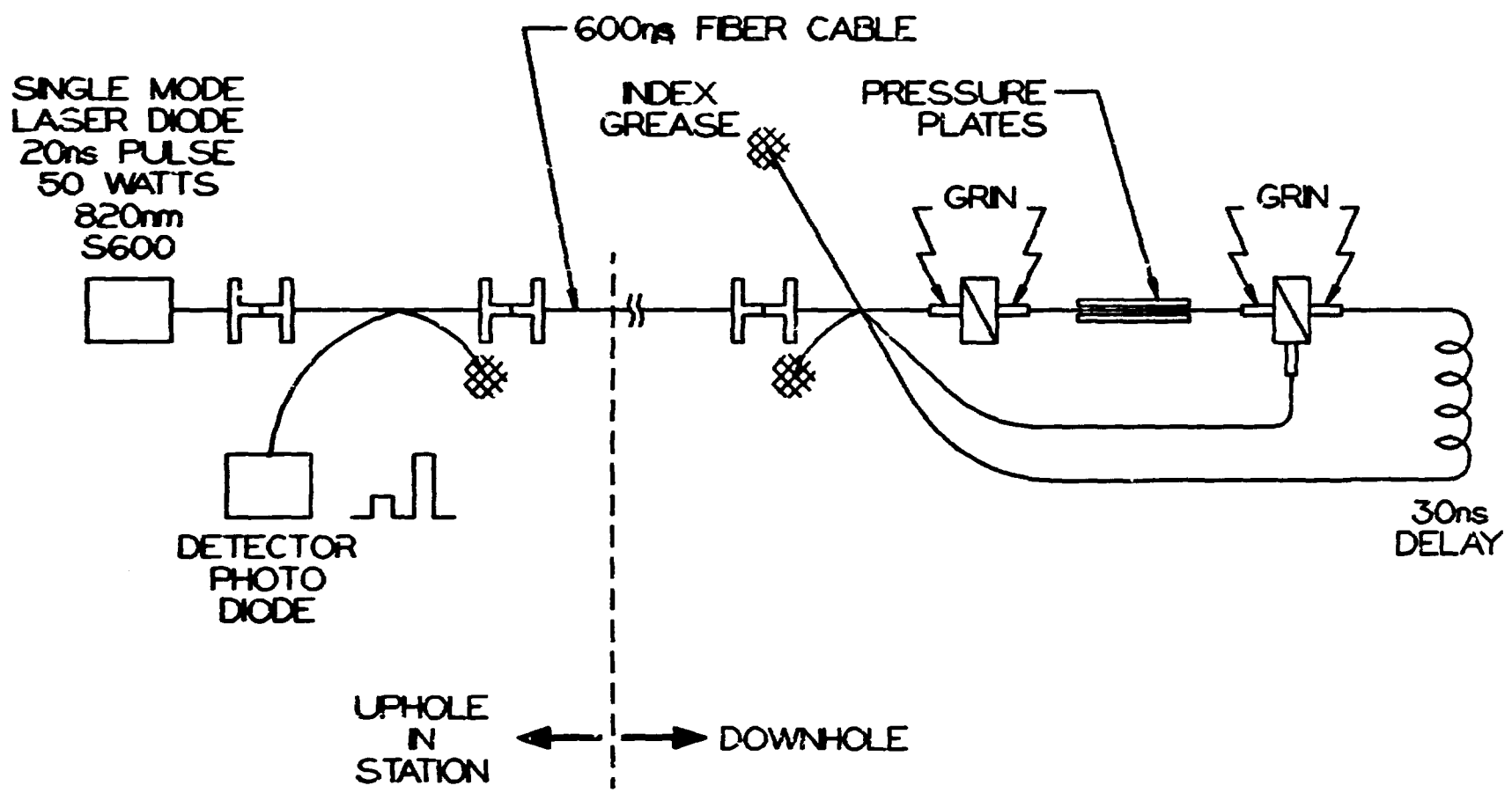

Figure 8

distance required. Graded index multimode fiber does not retain the linear polarization sufficiently to separate the components. The large core multimode is desirable, however, as it transmits more light. Our calculations indicate that, for a 600 meter transmission system using the single mode fiber, the detector will still output a 5 mv signal, which should be capable of recording. However, the signal to noise ratio must be studied.

Some of the areas of concern we face should be briefly discussed. As the first measurement chosen is a static one, it is important to ensure a consistant calibration over the required measurement time. The sensor will be inaccessible for a period of three weeks to a month while it is required to maintain a constant monitor of the pressure; its accuracy must remain through zero time. Therefore, drift in the sensor response is a concern. The backfill operation, which is literally the dumping of tons of coarse and fine sands down the hole, may affect the transmission fiber(s). This is a concern because it is still unclear how the transmission fiber affects the overall measurement system. Unfailing reliability is a factor that must be built into all systems that are used on nuclear tests; each test allows only one chance to obtain data. Lastly, as fibers respond to many physical changes, a major concern is to ensure that only the parameter of interest is measured and recorded.

V. SUMMARY

One of the most promising technologies available today for the improvement of data systems is fiber optics. Its use in data transmission is already accepted and is being systematically implemented, both in the communications industry and in weapons testing. Sensor technology has progressed rapidly during the past few years and represents the next phase in fiber optic exploitation and development. The unique properties of this technology have led us to conclude that a significant potential

to improve the overall effectiveness in the acquisition of environmental and engineering data for the Nuclear Weapons Test Program exists in fiber optic sensors. This technology undoubtedly has valuable contributions to make to similar field applications.

VI. REFERENCES

Ref. 1 - R. Malone, "Golden Egg Fiber Optic Technology", EG&G-1183-5120, EG&G, Los Alamos.

Ref. 2 - A. L. Harmer, "Principles of Optical Fibre Sensors and Instrumentation", Meas. and Cont., 15, 143 (1982).

Ref. 3 - T. G. Giallorenzi, J. A. Bucaro, A. Dandridge, G. H. Sigel, J. H. Cole, S. C. Rashleigh, R. G. Priest, "Optical Fiber Sensor Technology", IEEE, Jou. Quan. Elect., vol. QE-18, no. 4, April 1982.

Ref. 4 - R. Beers, "Fiber Optic Sensor Applications for Environmental, Engineering, and Support Measurements at the Nevada Test Site", GC-TR-83-424, September 1983.

Ref. 5 - C. M. Davis, E. F. Carome, M. H. Weik, S. Ezekiel, R. E. Einzig, "Fiberoptic Sensor Technology Handbook", Dynamic Systems, Inc. 1982.