CONF-8506145--1

LA-UR--85-2182

DE85 014092

Los Alamos National Laboratory is operated by the University of California for the United States Department of Energy under contract W-7405-ENG-36

TITLE ACTIVATED RECOMBINATIVE DESORPTION: A POTENTIAL COMPONENT IN MECHANISMS OF SPACECRAFT GLOW

AUTHOR(S) Jon B. Cross

SUBMITTED TO "Second Workshop on Spacecraft Glow"
Space Science Laboratory, NASA/Marshall Space Flight Center
Huntsville, Alabama 35812, June 17, 1985

DISCLAIMER

This report was prepared as an account of work sponsored by an agency of the United States Government. Neither the United States Government nor any agency thereof, nor any of their employees, makes any warranty, express or implied, or assumes any legal liability or responsibility for the accuracy, completeness, or usefulness of any information, apparatus, product, or process disclosed, or represents that its use would not infringe privately owned rights. Reference herein to any specific commercial product, process, or service by trade name, trademark, manufacturer, or otherwise does not necessarily constitute or imply its endorsement, recommendation, or favoring by the United States Government or any agency thereof. The views and opinions of authors expressed herein do not necessarily state or reflect those of the United States Government or any agency thereof.

By acceptance of this article, the publisher recognizes that the U.S. Government retains a nonexclusive, royalty-free license to publish or reproduce the published form of this contribution, or allow others to do so, for U.S. Government purposes.

The Los Alamos National Laboratory requests that the publisher identify this article as work performed under the auspices of the U.S. Department of Energy.

DISTRIBUTION OF THIS DOCUMENT IS UNLIMITED

Los Alamos National Laboratory
Los Alamos, New Mexico 87545

ACTIVATED RECOMBINATIVE DESORPTION: A POTENTIAL COMPONENT IN MECHANISMS OF SPACECRAFT GLOW

Jon B. Cross

Los Alamos National Laboratory

Los Alamos, New Mexico

Abstract. The concept of activated recombination of atomic species on surfaces is capable of explaining the production of vibrationally and translationally excited desorbed molecular species. Equilibrium statistical mechanics predicts that the molecular quantum state distributions of desorbing molecules is a function of only the surface temperature when the adsorption probability is unity and independent of initial collision conditions. In most cases though the adsorption probability is dependent upon initial conditions such as collision energy or internal quantum state distribution of impinging molecules. From detailed balance, such dynamical behavior is reflected in the internal quantum state distribution of the desorbing molecule. A number of surface-atom recombination systems demonstrate this "nonthermal" behavior: H_2-Cu,N_2-Fe,CO_2-Pt, etc. It is proposed that this concept, activated recombinative desorption, may offer a common thread in proposed mechanisms of spacecraft glow. Ground-based experiments are proposed which will complement flight investigations probing the mechanism of the glow phenomenon. Using molecular beam techniques and equipment available at Los Alamos, which includes a high translational energy O-atom beam source, mass spectrometric detection of desorbed species, chemiluminescent/laser induced fluorescence detection of electronic and rovibrationally excited reaction products, and Auger detection of surface adsorbed reaction products, we propose a fundamental study of the gas-surface chemistry underlying the glow process. This would lead to the development of materials that could alter the spectral intensity and wave length distribution of the glow.

Introduction

Interaction of the low-Earth orbit (LEO) environment with ram-oriented spacecraft surfaces may involve both gas-surface and gas-phase components whose relative importance is poorly understood. From conservation of flux arguments the ram pressure can be 30 to 100 times the ambient LEO pressure depending upon the extent of gas-phase equilibration with the surface temperature. At low-altitude pressures as high as 10^{-3} Torr may be present near ram surfaces, which could produce glow from the low rates of rotational and vibrational excitation produced by collisions with ram-directed O-atoms (5 eV) or N_2 (11 eV) as well as ion or electrons. An alternative mechanism to gas-phase excitation lies in desorption of vibrationally excited recombination or surface reaction products through activated recombination. Molecules not normally found in LEO can be formed by recombination of oxygen and nitrogen atoms on spacecraft surfaces as well as reactions of O-atoms with the surface substrate atoms forming species such as OH, CO, CO_2, CN, NO, etc.; all of which may contribute to chemiluminescent glow through activated desorption.

Activated Recombinative Desorption

Figure 1 is a schematic potential energy representation of molecular and atomic particle interactions with a solid surface which illustrates the concept of activated recombinative desorption. Collisions of gas-phase molecules with a surface can result in physisorption of the molecule into a precursor van der Waals potential well or chemisorption into a dissociative atomic state by crossing from the molecular to the atomic state curve. In many cases a barrier must be surmounted to cross to the atomic state resulting in an activation energy for adsorption in molecule-surface collisions while adsorption of atomic species is rarely limited by barriers. The reverse process, molecular desorption, is accompanied by the release of molecules having a high translational energy; i.e., atomic recombination occurs with the molecule being born at an elevated potential and leaves the surface with this energy. A number of examples [Comsa and David, 1982; Kubiak et al., 1984; Robota et al., 1985] involving hydrogen can be found in the literature which show that H_2 desorbs with translational temperatures as high as 2000 K and with vibrational populations 50 times greater than expected from an equilibrium ensemble at the surface temperature of 300 K. Molecular nitrogen [Thorman and Bernasek, 1978] exhibits high vibrational excitation in the ground electronic state when desorbing from iron. Vibrational excitation of CO_2 produced by oxidation of CO on platinum [Brown and Bernasek, 1985] has been observed with the extent of excitation decreasing with increasing surface coverage of oxygen. In these cases the desorbing molecule loses memory of the initial conditions prevailing before desorption and is only influenced by its position at birth.

Even though there can be extensive etching of surfaces in LEO, oxygen or nitrogen atom reactions <u>with</u> spacecraft surfaces to produce excited products seem to be ruled out by the fact that most surfaces exposed to the ram direction glow with intensity variations of 1 to 3, i.e., that the glow is independent of surface composition. This suggests that surfaces simply act as a third body to catalyze recombination of existing atomic species found in LEO, most probably oxygen and nitrogen atoms. Since the altitude dependence of the glow intensity follows that of atomic and not molecular species, N_2 seems to be ruled out as a reaction partner with O-atoms, but it has been proposed [Swenson et al., 1985] that nitrogen atoms may be the reactant controlling the glow intensity. This suggests that the following reaction sequence may be one of the major components in the glow mechanism

$$O(g) + N(g) + \text{surface} \rightarrow NO(g) + \text{surface} \qquad (1)$$

$$O(g) + NO(g) + \text{surface} \rightarrow NO^*_2(g) + \text{surface} \qquad (2)$$

where the surface acts as a third body to stabilize the newly formed molecules before desorption. Many investigations have been performed on the reaction

$$O_3 + NO \rightarrow O_2 + NO_2 \qquad (3)$$

which have shown that NO_2 can be formed with substantial vibrational [Kahler et al., 1984] energy, and our work [van den Ende et al., 1987]

shown in Figure 2 shows both internal and translational excitation of the NO_2 product. Though it may be stretching the point a bit to consider (3) as a reaction of O-atoms on an oxide surface (O_2) with NO, nevertheless the results indicate that NO_2 formed from this reaction possesses the characteristics needed to fit the glow data, i.e., long life time (tens of microseconds) and strong spectral emission in the infrared (1-3 μ). Indeed it has been demonstrated [Brown and Bernasek, 1985] that vibrationally excited CO_2 is produced through oxidation of CO on platinum surfaces and chemiluminescence is observed in the gas phase. Satellite mass spectrometer measurements [Engebretson and Mauersberger, 1979] have shown formation of NO and NO_2 on surfaces in the ion source region but no direct measurements of nitrogen oxide desorption from spacecraft surfaces has yet been made to confirm this hypothesis. High signal-to-noise mass spectrometric investigations of the spacecraft environment will be needed to identify the presence of NO_2.

Gas-Phase Excitation

Even though activated recombinative desorption seems an attractive idea to explain spacecraft glow, there is no conclusive evidence from LEO experiments to support it and there may in fact be several mechanisms in operation which come into play as the concentration of species changes. NO_2 could indeed be formed at high surface coverages of oxygen and desorb in its ground state with subsequent excitation by gas-phase collisions with ion, electron, or neutral species. A combination of molecular beam scattering experiments and theory will be needed to determine cross sections for high energy O atom excitation processes in order to realistically assess the contribution of gas-phase collisions to the glow phenomenon.

LEO Experiments

Extensive experimental data are needed from LEO in order to narrow down the possible mechanisms of spacecraft glow. Both high resolution spectroscopic information and simultaneous mass spectrometer detection of surface desorbed species will be necessary to distinguish between various proposed models. To study etching and glow mechanisms a mass spectrometer with high sensitivity and differential pumping and the ability to use modulation techniques will be needed in order to determine concentrations of reactants as well as surface reaction products. Existing mass spectrometers could be retrofitted with ion counting detectors, choppers for performing modulated molecular beam detection, and molecular shields for differential pumping. A strong emphasis should be placed on using state of the art techniques in future LEO experiments.

Los Alamos LEO Simulation Facilities

A 5 eV O atom source is being developed [Cross and Cremers, 1986] at Los Alamos that will be capable of delivering fluxes of 10^{15-17} O atoms/cm^2/s to a sample surface for materials testing, ground based calibration of flight hardware, and fundamental investigations of etching and

glow mechanisms. The source is based upon the use of CO_2-laser-sustained discharge techniques and using a 70-W laser has demonstrated translational temperatures of 9000 K in xenon. Calculations predict that similar discharges in helium will produce velocities in excess of 10 km/s but will require laser powers of 1 kW or greater. We have recently demonstrated operation of this concept at 400 W of laser power in argon and 30% oxygen for 2 hours using a boron nitride nozzle. We are presently integrating this laser (maximum power of 700 W) with the Los Alamos Molecular Beam Dynamics Apparatus 1 (LAMBDA 1) to obtain O-atom beam velocity distributions.

LAMBDA 1 [Cross, 1984] shown in Figure 3, is being configured to test and calibrate a mass spectrometer (provided by AFGL) which is to be flown on STS to detect surface desorbed etching reaction products as well as reactants in the ambient atmosphere. Our objective will be to use the high-energy laser sustained O-atom source to 1) determine detection sensitivity for 5-eV O-atoms and etching reaction products, 2) demonstrate the advantage of modulated phase sensitive detection techniques in LEO experiments, 3) determine the contribution to LEO observations from gas-surface reactions occurring in the ion source, and 4) calibrate the AFGL mass spectrometer against the LAMBDA 1 mass spectrometer detector in order to relate ground-based investigations to LEO observations. This effort will provide the unique ability to directly compare future studies of etching mechanisms with LEO experiments and to provide an O-atom testing facility for use in materials development programs. LAMBDA 1 has demonstrated [Pack et al., 1982] high sensitivity and resolution in measurements of gas-phase collision dynamics and could also be used to measure elastic, inelastic, and reactive high energy O-atom collision cross sections that would be used in future glow modeling.

Trough LAMBDA 1 can be configured to also detect chemiluminescence, LAMBDA 2, shown in Figure 4, is better suited for these types of experiments and provides the instrumentation to detect reaction products from beam-surface scattering by 1) mass spectrometry, 2) chemiluminescence, or 3) laser-induced fluorescence in a UHV environment as well as providing surface characterization using Auger or XPS/UPS spectroscopy. Beam sources developed for the LAMBDAs are interchangeable between the two instruments, thus allowing comparison of results. We propose using this machine to investigate surface catalyzed gas-phase chemiluminescence produced by the interaction of high-energy oxygen and nitrogen beams with spacecraft materials. Representative surfaces would be exposed to a N/O atom beam, and measurements of 1) translational energy using time of flight techniques and 2) internal energy using laser induced fluorescence would be performed to determine the extent of excitation. Through the combined use of LAMBDA 1 and 2 a complete picture of etching and glow mechanisms can be obtained, which would lay the basis for design of materials and processes for use in low Earth orbit.

Conclusion

To achieve a sustained presence in Low Earth orbit new and novel materials will need to be developed that can resist the effects of long term O atom exposure. Heat rejection systems will require high temperature surfaces that will not crack or alter their IR emissivity over long periods of time (30 years). High strength to weight ratio epoxy fiber composite structural materials will need protective coatings for long term,

maintenance-free operation while silver interconnects on solar cell panels will require coatings or be replaced with more inert material. Methods for controlling or eliminating ram surface glow need to be devised to provide optimum conditions for infrared astronomy and Earth viewing. Before new materials can be devised, a basic understanding of etching and glow mechanisms will be required after which optimum design parameters for materials can be decided upon. Activated recombinative desorption of reaction products from surfaces may be a common thread in mechanisms of spacecraft glow, but a great deal of basic research into gas-phase and gas-surface dynamics will be needed to fully explain this phenomenon.

Los Alamos is uniquely equipped with instrumentation and staff to collaborate with NASA in fundamental investigations of LEO material problems. A traditional strength of the Laboratory is materials chemistry and physics from which facilities have been developed for ion microprobe investigations of subsurface bulk diffusion processes [Thompson et al., 1983], surface chemistry and physics [Campbell and Paffett, 1984], and theory [Doll, 1985] of gas-surface processes. The combination of LAMBDA 1 used for mass spectrometric angular and translational energy particle detection, LAMBDA 2 used for internal state and fixed laboratory angle translational energy detection, and the high-energy O-atom source represents an additional unique resource that can be focused to provide solutions to the challenges of extended operation in low-Earth orbit.

References

Comsa, G., and R. David, Surf. Sci., 117, 77, 1982.

Kubiak, G. D., G. O. Sitz, and R. N. Zare, J. Chem. Phys., 81, 6397, 1984.

Robota, H. J., W. Vielhaber, M. C. Lin, J. Segner, and G. Ertl, Surf. Sci., in press, 1985.

Thorman, R. P., and S. L. Bernasek, J. Chem. Phys., 74, 6498, 1978.

Brown, L. S., and S. L. Bernasek, J. Chem. Phys., 82, 2110, 1985.

Swenson, G. R., S. B. Mende, and K. S. Clifton, Geophs. Res. Lett., 12, 97, 1985.

Kahler, C. C., E. Ansell, C. M. Upshur, and W. H. Green, Jr., J. Chem. Phys., 80, 3644, 1984, and references therein.

van den Ende, D., S. Stolte, J. B. Cross, G. H. Kwei, and J. J. Valentini, J. Chem. Phys., 77, 2206, 1982.

Engebretson, M. J., and K. Mauersberger, J. Geophys. Res., 84, 839, 1979.

Cross, J. B., and D. A. Cremers, AIAA 23rd Aerospace Sciences Meeting, January 14-17, 1985, Reno, Nevada, AIAA #85-0473.

Cross, J. B., Thirteenth Space Simulation Conference, October 8-11, 1984, Orlando, Florida, NASA Conference Publication 2340, .

Paek, R. T, J. J. Valentini, and J. B. Cross, J. Chem. Phys. 77, 5486, 1982.

Thompson, K. A., W. P. Ellis, T. N. Taylor, S. M. Valone, and C. J. Maggiore, Nucl. Instr. and Methods Phys. Res., 218, 475, 1983.

Campbell, C. T., and M. T. Paffett, Surf. Sci. 139, 396, 1984, and 143, 517, 1984.

Doll, J. D., Monte Carlo Fourier Path Integral Methods in Chemical Dynamics, J. Chem. Phys., in press, 1985.

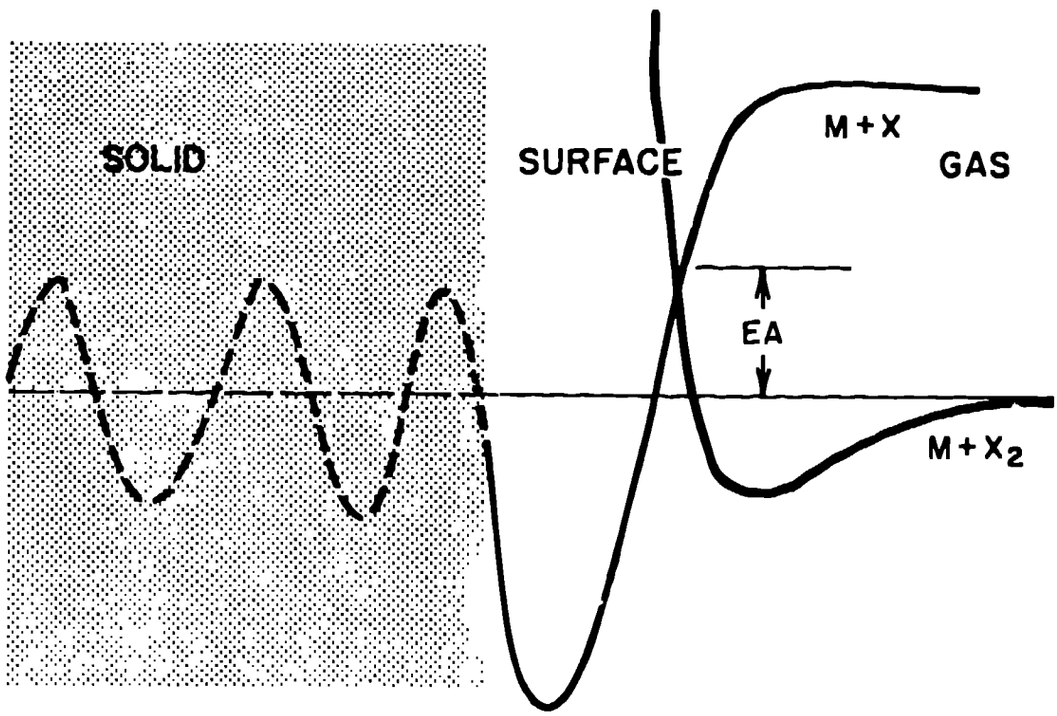

Fig. 1. Potential energy diagram representing activated desorption. Molecules colliding with a surface can be trapped in a molecular precursor well or with sufficient collision energy surmount the barrier EA and cross to the dissociative atomic state curve and be chemically trapped. In most cases desorption occurs with the expulsion of molecules X_2 rather than X, and the molecule exits the surface with energy EA. In some cases (see Cassa and David, 1987) the two dimensional surface has holes in it and molecules can exit over the barrier and are not affected by surface temperature; while other molecules come from states without barriers and are accommodated to the surface conditions.

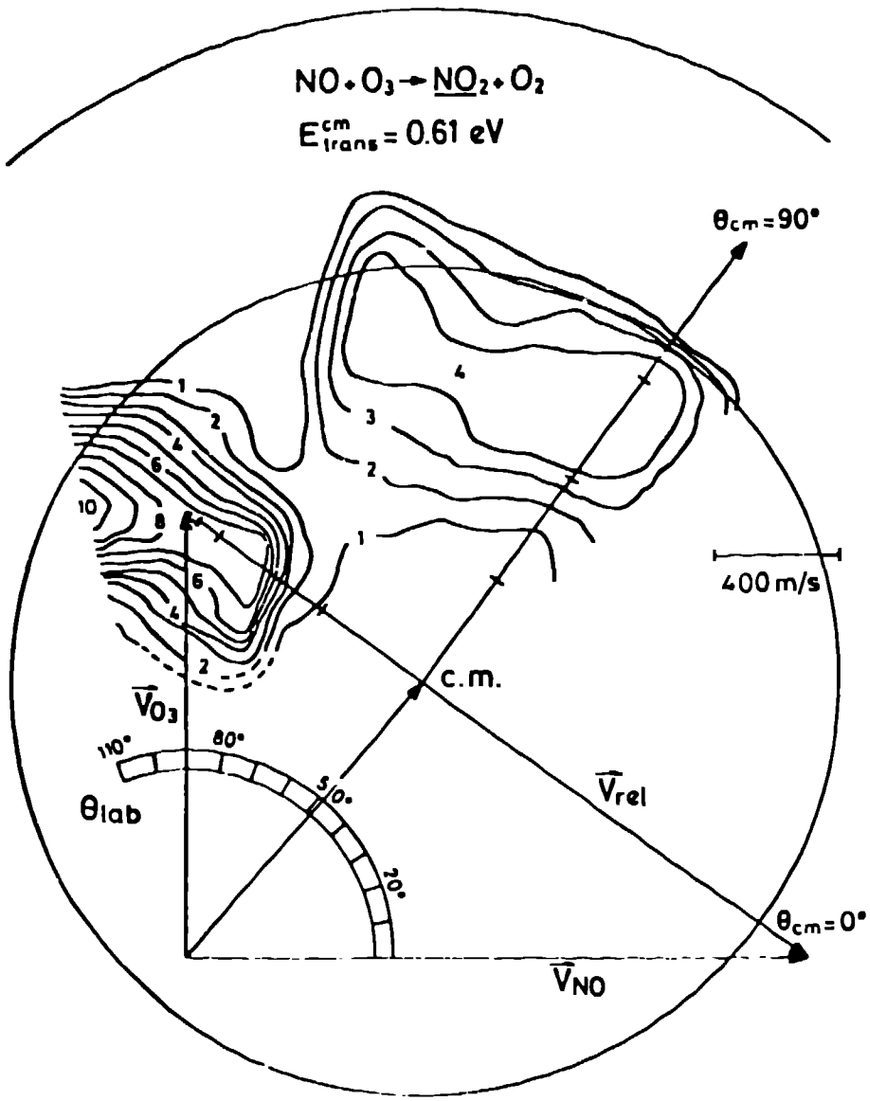

Fig. 2. Center-of-mass contour map of the NO_2 flux distribution obtained from laboratory angular and time-of-flight distribution measurements by performing a one-Newton diagram transformation of the gas-phase data. There is a narrow backward NO_2 peak and a broad sideway peak which are clearly separated. The outer circle represents the velocity of NO_2 when all available energy is put into translation while the inner one gives the maximum velocity at which chemiluminescence is possible. The majority of product has high internal excitation. NO_2 formed by recombination of NO + O on oxide surfaces may exhibit similar dynamics.

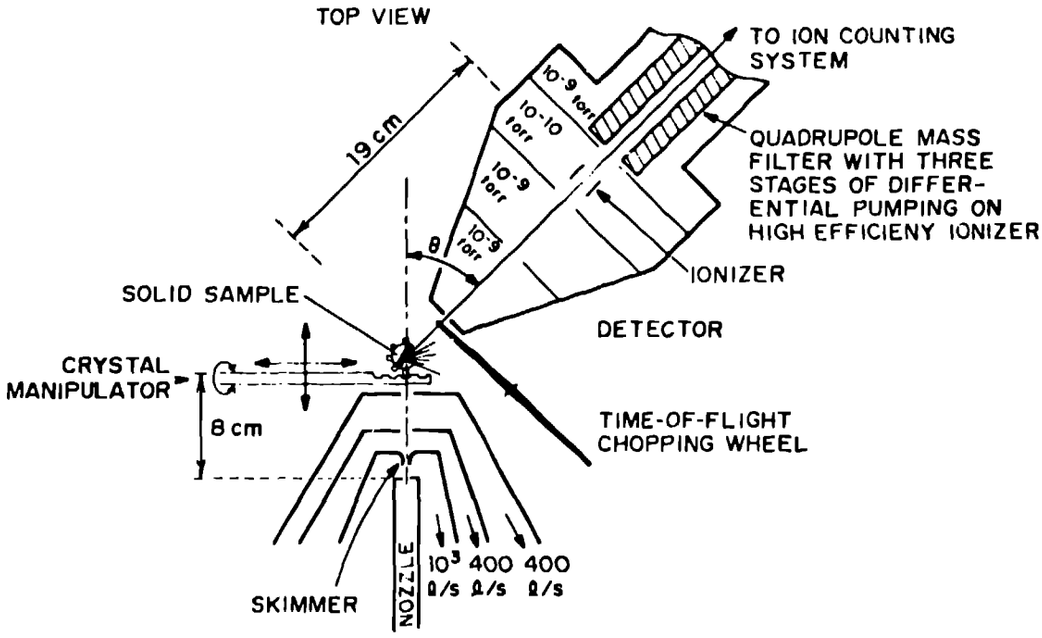

Fig. 3. Los Alamos Molecular Beam Dynamics Apparatus 1 (LAMBDA 1) showing the central portion of the instrument including the molecular beam source, sample manipulator-molecular beam intersection zone, and a portion of the movable detector. The detector is an electron bombardment ionizer-quadrupole mass spectrometer suspended from the rotatable lid of the main vacuum chamber for the measurement of angular distributions. Also shown is a time-of-flight chopping wheel, which allows for 50% transmission efficiency and time-of-flight measurement by cross correlating the data with the sequence. Pumping on the scattering chamber is accomplished with a liquid nitrogen cryoliner, turbomolecular pump, and a closed cycle gaseous helium cryopump. Pressures of 10^{-8} to 10^{-9} Torr are obtained in the scattering chamber.

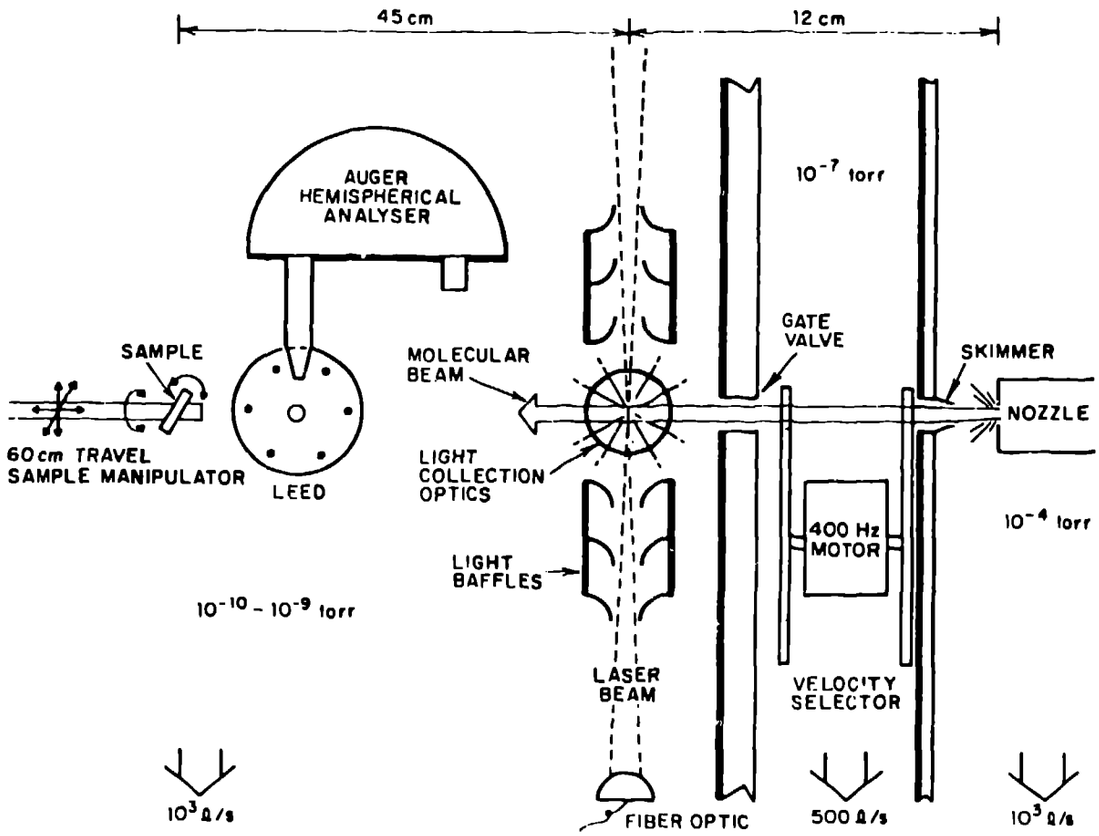

Fig. 4. LAMBDA 2. This figure shows a detailed view of the central portion of the apparatus that consists of a nozzle chamber, a differential pumping chamber containing flags, choppers, and a slotted disk velocity selector; and a UHV (10^{-10} Torr) chamber containing a cryoshroud, sample manipulator, surface analysis equipment consisting of LEED and Auger units, provision for collecting fluorescence light and laser-induced fluorescence signals. A quadrupole mass spectrometer (not shown) with two stages of differential pumping and a cross correlation time-of-flight chopper is opposite the LEED unit and is limited to a fixed laboratory angle.