Preprint LA-UR-86-614

C. 1

Title: The Los Alamos Controlled Air Incinerator for Hazardous Chemical and Mixed Radioactive Wastes

Author(s): J.S. Vavruska, L.C. Borduin, D.A. Hutchins, R.A. Koenig, and L. C. Warner

Submitted to: Waste Management '86 Symposium, March 2-6, 1986, Tucson, Arizona

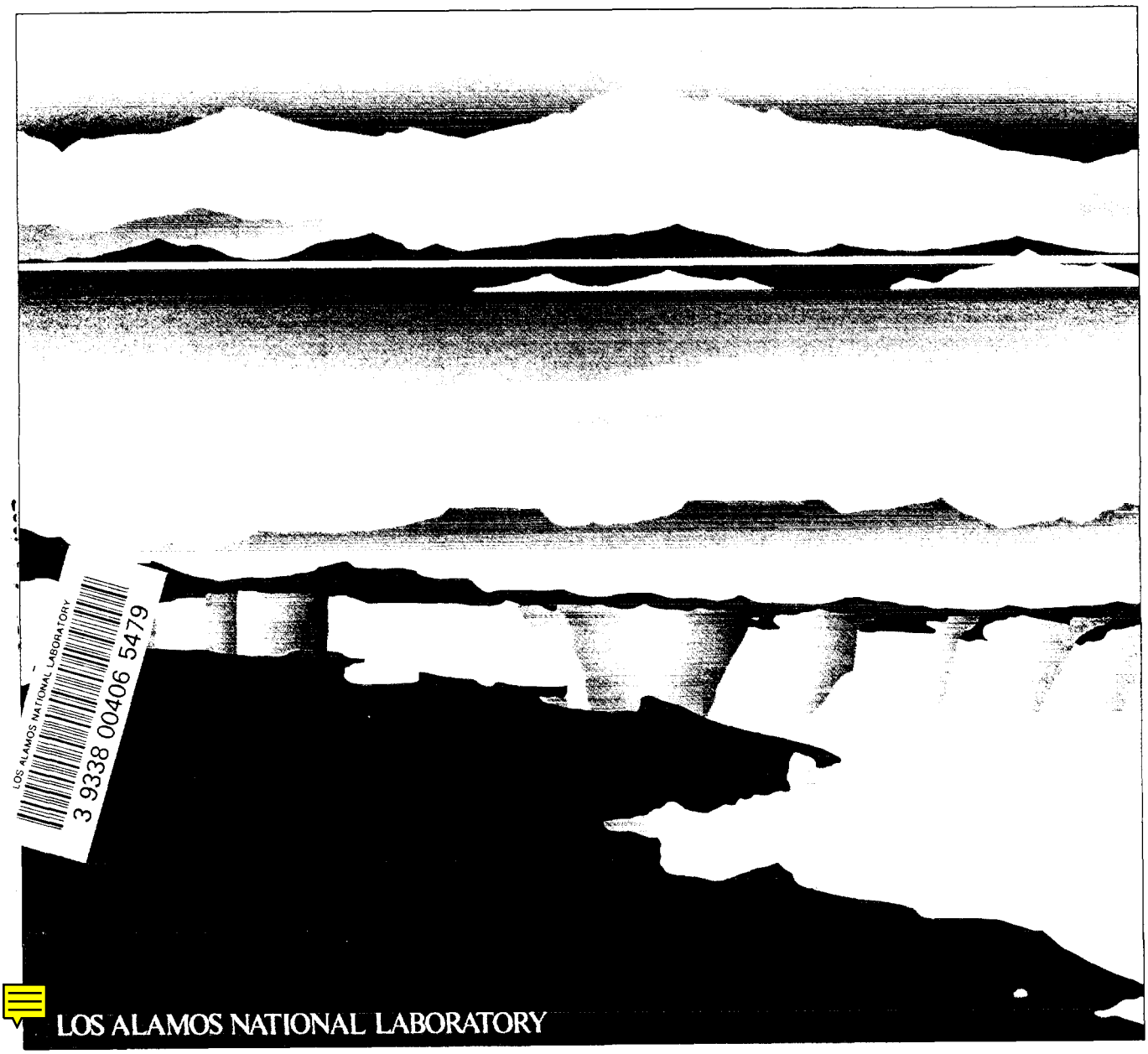

SCANNED NOV 08 1996

THE LOS ALAMOS CONTROLLED AIR INCINERATOR FOR HAZARDOUS CHEMICAL AND MIXED RADIOACTIVE WASTES

J. S. Vavruska, L. C. Borduin, D. A. Hutchins,
R. A. Koenig, C. L. Warner
Los Alamos National Laboratory
Waste Management Group
Los Alamos, NM 87545

ABSTRACT

The Los Alamos Controlled Air Incinerator (CAI) is currently the only radioactive waste incineration facility in the US permitted to treat polychlorinated biphenyls (PCBs). The CAI was developed in the mid-1970's as a demonstration system for volume reduction of transuranic (TRU) contaminated combustible solid wastes. It has since undergone additions and modifications to accommodate hazardous chemical wastes in response to a need within the Department of Energy (DOE) to treat mixed radioactive/chemical wastes. An overview of these additions which include a liquid feed system, a high intensity liquid injection burner, and an activated carbon adsorption unit is presented here. Also included is a discussion of the procedures required for Toxic Substances Control Act (TSCA) and Resource Conservation and Recovery Act (RCRA) permitting of the CAI.

BACKGROUND

The Los Alamos CAI was developed in the mid-1970's to serve as a demonstration system for incineration-based volume reduction of transuranic (TRU) combustible solid wastes. The primary process constraints at that time were maximum containment of TRU isotopes in the equipment, assuring no release of such materials to the environment, and minimization of particulate carryover from the combustion chambers into the offgas treatment system. The CAI, as it was built for TRU-contaminated solid waste service, has been described in detail previously in several publications[1-4]. A schematic of the overall CAI process is shown in Fig. 1.

Following are brief descriptions of the various subsystems which were the foundation of the CAI process prior to additions made for hazardous chemical waste service.

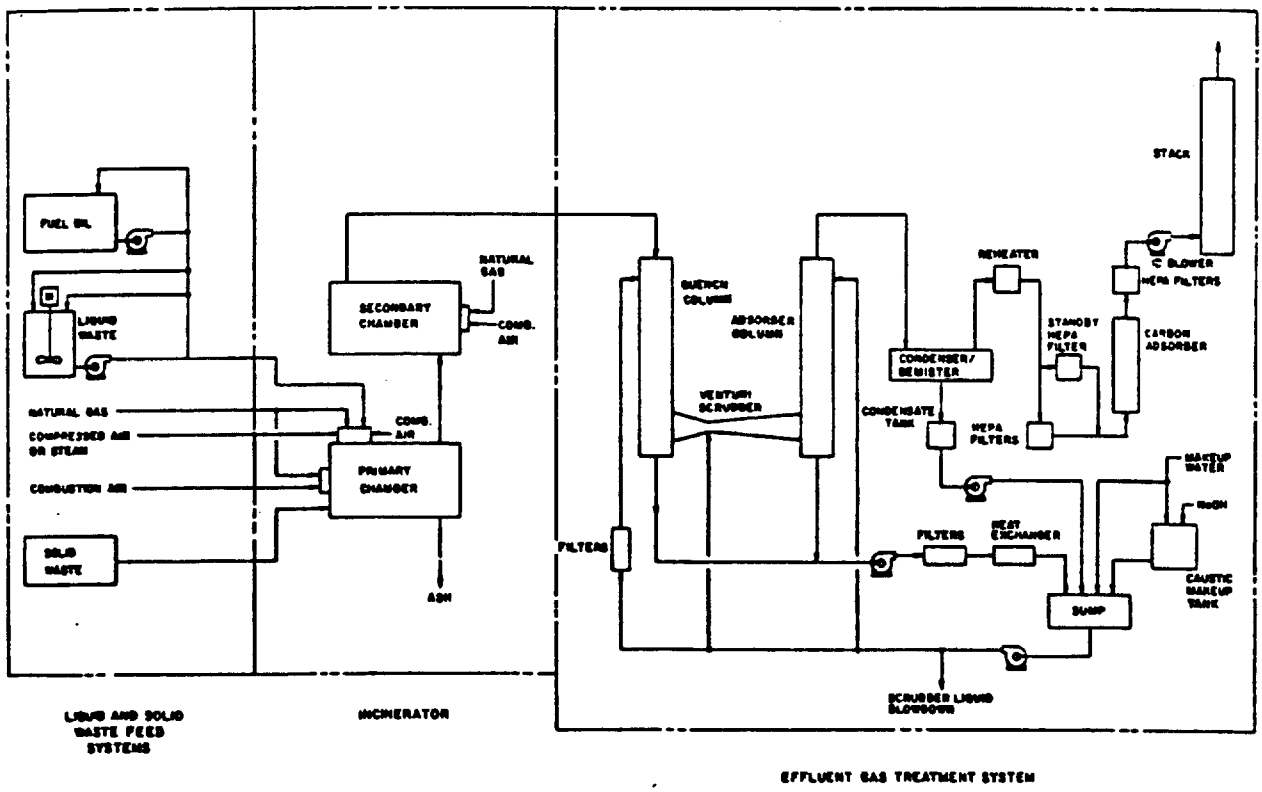

LOS ALAMOS NATL. LAB. LIBS.
3 9338 00406 5479

Fig. 1 The Los Alamos Controlled Air Incinerator (CAI) Process

Incinerator

The heart of the original system consisted of a dual chamber commercially available controlled air unit modified extensively to meet the containment requirements just mentioned and to enhance combustion. Similar unmodified models are frequently used in municipal, pathological, and industrial waste disposal applications. Both chambers are refractory-lined and natural gas is used as supplementary fuel. Solid waste is charged to the primary chamber by the ram feeder where combustion proceeds on the hearth. Underfire air supplied at hearth level along its length allows controlled burning of the waste in a relatively quiescent environment. On the contrary, for successful liquid organic waste destruction, turbulence and a high degree of mixing of fuel with air is desirable. This subject is discussed later under modifications to the incinerator for liquid and slurry combustion.

Gases from the primary chamber, which include nitrogen and unreacted oxygen from the air, carbon dioxide, unburned volatile organic compounds, low concentrations of carbon monoxide and nitric oxides, and solid entrained particulates exit upwards through an interconnecting duct into the secondary chamber, which serves as an afterburner. Here, excess air is introduced to promote turbulent mixing and sufficient gas residence time is provided to complete combustion reactions. Typical operating temperatures are 870 and 1100°C in the primary and secondary chambers, respectively for solid TRU wastes, and somewhat higher for halogenated hazardous liquid wastes such as PCBs. Temperatures and oxygen levels at the exit of both chambers are carefully controlled as the most critical combustion parameters.

Solid Waste Feed System

The CAI, at the time it was developed, provided only for solid waste introduction into the primary chamber of the incinerator via a totally contained glovebox train. This train is equipped with TRU assay and X-ray units. These units scan the incoming waste prepackaged in 0.3m X 0.3m X 0.6m cardboard boxes for TRU content and the presence of noncombustible objects which could potentially cause problems in ash handling. No further modifications to the solid waste feed line have been necessary for hazardous waste service and none are expected provided solid hazardous wastes can continue to be packaged in boxes of the above size. In fact, this feed line with its glovebox containment, has proven ideally suited to the handling of hazardous solid wastes including those which are highly toxic in nature.

Effluent Gas Cleaning System

As has been described before[1,4], the CAI's effluent gas cleanup system is of the aqueous or wet variety. An aqueous system was chosen initially in anticipation of treatment of solid wastes containing significant quantities of halogens, primarily chlorine. In the case of solid TRU-contaminated trash wastes, the major source of halogen is the plastic polyvinyl chloride (PVC). Aqueous offgas treatment becomes even more important as the halogen loading in the waste increases, reaching maximums of greater than 60% by weight for the heavily chlorinated solvents and oils such as PCBs. This treatment option was also chosen because it could be easily coupled with the existing liquid waste treatment facility at Los Alamos.

A schematic of the CAI's effluent gas cleaning system is shown in Fig. 2. The complete offgas train in its present configuration includes a spray quench tower, a high energy venturi scrubber, a packed-column acid gas absorber, a condenser, a mist eliminator, a reheater, High Efficiency Particulate Air (HEPA) filters, and an activated carbon adsorber. The latest addition to this train is the activated carbon adsorber which was installed to remove radioiodine and trace organics from effluent gases. This adsorber is discussed later in more detail.

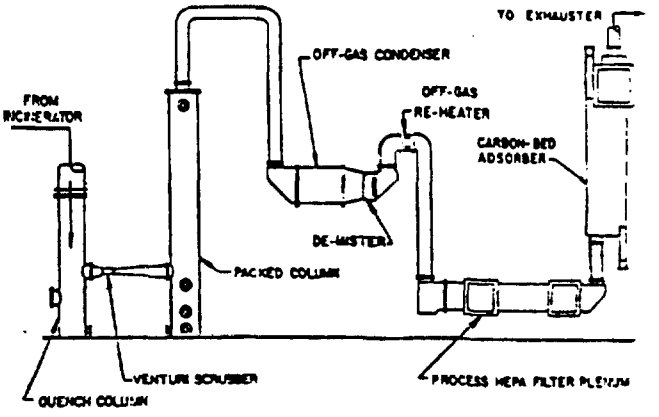

Fig. 2. CAI Effluent Gas Cleaning System

Other CAI Subsystems

Other subsystems and auxillary equipment associated with the Los Alamos CAI including scrub solution recycle, process sampling and analysis, ash removal, and instrumentation and controls have been previously described in detail[1-4].

ADDITIONS TO THE CAI FOR HAZARDOUS WASTE SERVICE

A substantial fraction of the 35 million tons of hazardous waste generated in the US each year is either in liquid, slurry, or sludge form[5]. Similarly for mixed radioactive/hazardous wastes, a significant fraction exists as liquids such as oils and solvents contaminated with radioactivity. Recognizing the limitations of the CAI process as it was originally developed for solid waste feed only, it was decided to expand the capability further to handle liquids and slurries. This prompted a major program of process upgrade which involved addition of a liquid feed system and a high intensity liquid burner. Also, to increase the effluent gas cleaning system's capability to remove trace uncombusted organics and radioiodine from the incinerator offgas, an adsorption device using activated carbon was installed as a final component in the train. These major additions to the CAI process are described in greater detail in the following paragraphs.

Liquid Feed System

Design of a liquid waste feed facility for the CAI was completed in late-1980 with construction and installation completed in mid-1981. The design criteria of this new feed system were numerous. First, it was necessary to receive liquid/slurry wastes in drums at the facility and safely transfer the contents of the drums to the incinerator feed tank, insuring minimum chemical exposure of operating personnel to direct liquid and vapor contact. In

addition, sufficient containment was needed for large liquid spills resulting from transfer or feeding operations. Another requirement of the system was the ability to adjust the heating value and viscosity of the waste feed stream by addition of fuel oil either on a batch or continuous basis. An additional criterion was the capability of precisely metering liquids and slurries to the liquid burner at desired flowrates without plugging or settling of solids in the lines during transport. In order to segregate radioactive wastes from non-radioactive hazardous wastes received at the facility, and thereby avoid cross contamination, the liquid feed facility was to be located remote from the main incinerator process area. Also, safety precautions dictated a remote liquid feed facility to avoid storage of combustible material in the incinerator area.

To fulfill these requirements, an 18.6 m^2 (200 ft^2) dedicated room was constructed in a separate bay from the incinerator process area. The room is provided with a 0.152 m (6 in) high concrete berm designed to contain a spill equivalent to the total volume of all vessels and drums in the room, about 2270 L (600 gal). Room ventilation provides for about 36 air changes per hour and air exhausts through a HEPA filter followed by an activated carbon filter before discharging into the facility stack.

The liquid feed system itself, excluding the fuel oil supply system, is completely housed within the dedicated room, and is shown schematically in Fig. 3. Waste drums are moved into

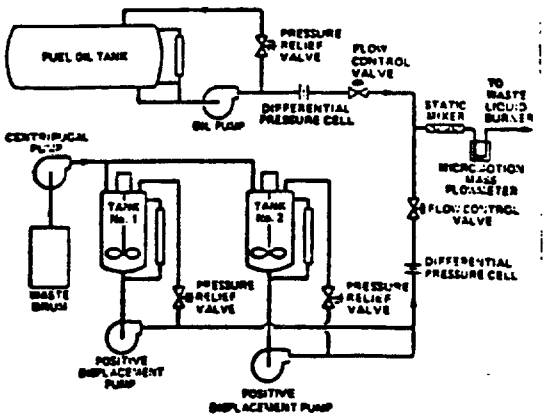

Fig. 3. CAI Liquid Feed System

the room on a pallet where they are opened and the contents filtered and transferred to the feed tanks. The two feed tanks are 587 L (155 gal) in capacity and are lined with polyvinylidene fluoride (PVDF) elastomer for corrosion resistance. Each tank is equipped with an agitator on a removable head. Low and high liquid level indicators and alarms are provided in each tank. Variable speed positive displacement progressing cavity pumps deliver liquid to the burner. Desired burner feed compositions for heating value and viscosity adjustment, as well as flowrates, can be achieved in either of two ways: 1) batchwise blending of waste liquid with No. 2 fuel oil in one of the feed tanks yielding a homogeneous mixture, or 2) continuous blending of fuel oil and waste using an in-line static mixer unit. Precise metering of clear liquid streams has been accomplished by feedback control using differential pressure (d/p) cells and control valves located in the fuel oil and waste feedlines upstream of the static mixer. For metering slurries, however, the only satisfactory method found to consistently avoid plugging problems has been by control of pump speed with no line restrictions such as d/p cells, control valves, or static mixers. Flowrate of the final waste stream to the burner is monitored by a coriolis-type mass flowmeter which gives a measure of instantaneous mass flowrate and totalized flow. Further upgrade of this liquid feed system is presently in progress to enhance its reliability by elimination of all unnecessary restrictions and sharp tube bends which cause problems in feeding slurries. Flowrate of slurries and clear liquids will be controlled solely by variation of stroke length on a positive displacement tubular diaphragm pump. The modified system is to be completed by April 1986.

Liquid/Slurry Burner

As the central feature of the CAI upgrade to accommodate hazardous chemical and mixed radioactive liquid and slurry wastes, a high intensity vortex liquid injection burner was added to the process. Selection criteria demanded a burner which could easily accept both liquids and slurries and provide sufficiently high heat density within the burner block to thermally decompose even the most stable organic compounds - chlorinated hydrocarbons including PCBs, chlorinated benzenes, and straight chain chlorinated compounds. The burner is a commercially available Trane Thermal model LV-2 vortex type[6] and its size was chosen based on a desired maximum heat release rate of 586 kW (2 X 10^6 Btu/h). This heat release rate is compatible with sizing of the CAI and offgas treatment system. The existing equipment configuration limited the burner installation location to the side of the primary chamber opposite the natural gas burner (Fig. 4).

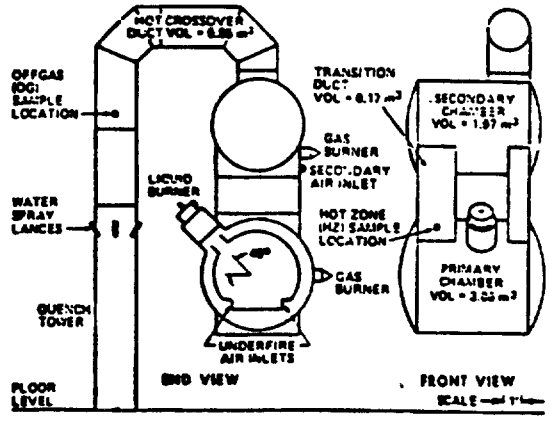

Fig. 4. The CAI and Quench Tower Showing Liquid Burner Location

The burner is mounted so that it fires downward at a 45° angle from horizontal directly into the primary chamber. The unit is equipped with its own natural gas pilot and supply for auxiliary heat. Atomization of the liquid feed stream can be accomplished with either air or steam. Steam is the preferred atomization medium for clear organic liquid wastes and fuels. If water/oil emulsions are used as a carrier to transport solids in the form of slurries to the burner, air is preferred for atomization. Steam was found to break down emulsions causing plugging of the burner nozzle. Two types of atomizing nozzles are used in the burner and choice depends

on the properties of the feed stream. For clear prefiltered liquids with steam atomization, an internal-mix nozzle is used. In this type of nozzle, steam and waste liquid are immediately mixed at the inlet of the nozzle and sprayed through a hexagonal pattern of holes on the cone flame tip. Slurries containing suspended solids are atomized in an external atomization nozzle. In this nozzle, the slurry flows down an internal tube and atomizing media (either air or steam) flows in the annular space outside this tube. Atomization takes place via high shear contact of the two fluids exterior to the nozzle at the flame tip. Typically high heat densities achieved in this burner are 1.03×10^4 W/m^3 (1×10^6 Btu/h-ft^3), compared to 155.2 kW/m^3 (1.5×10^4 Btu/h-ft^3) in the CAI primary chamber.

The temperature in the CAI primary chamber, when burning liquids or slurries, is determined by the heat release rate of the feed stream and heat losses. If the heat release rate of the waste feed is insufficient to maintain the desired temperature, the natural gas supply to the primary chamber is automatically modulated to provide proportional response to fuel demand.

Activated Carbon Adsorber

As it became obvious that the Los Alamos CAI would move into the area of hazardous chemical waste research and development[7], a study was undertaken to assess what additional offgas treatment may be required beyond that already existing in the process. The potential for the presence of trace uncombusted organic species in the gaseous effluent, though extremely low, justified installation of appropriate organic removal equipment. Also the ability to remove volatile radioiodine from the effluent gas was needed for low level radioactive waste incineration testing at the same time[8]. The concept of fixed bed adsorption on activated carbon was selected in which the entire incinerator offgas flow passes through the adsorbent bed. A large adsorption unit was designed and custom fabricated by the Waste Management Group at Los Alamos (Fig. 5). The bed of granular carbon, supported by parallel screens, is 0.152 m (6 in) deep with a projected flow area of 2.97 m^2 (1.22 m wide X 2.44 m long). The steep bed inclination angle allows for complete gravity removal of carbon via star valves located at the top and bottom of the adsorption unit. Activated carbon bed depth and projected cross-sectional area were sized to provide a minimum 0.5 s residence time of gas in the bed at a superficial velocity of 0.31 m/s which corresponds to the highest anticipated offgas flowrate of 0.94 m^3/s (2000 acfm). The adsorption unit has been in operation for 5 years and no organics have been detected in the effluent gas using modified EPA method 5 sampling trains.

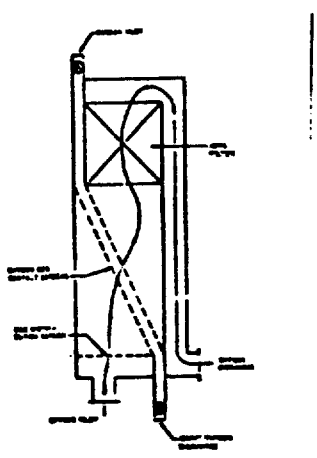

Fig. 5. Effluent Gas Activated Carbon Adsorber.

Other Process Improvements

Parallel with modifications to the CAI for treatment of hazardous chemical wastes is the goal of process upgrade to accept Los Alamos-generated TRU solid and liquid wastes on a semi-production basis. The requirements of maximum containment of TRU isotopes within the system and minimum hands-on maintenance call for careful equipment component selection and design as well as appropriate materials of construction. Throughout the CAI upgrade process, close attention has been paid to the unique requirements of compatibility with both hazardous and TRU wastes.

An array of test specimens consisting of several types of refractory brick, placed as a hearth in the CAI primary chamber in 1979, was recently removed for evaluation. Refractory compositions were evaluated for general durability and resistance to the high temperature oxidizing and reducing conditions of the CAI over the past 7 years. Exposure conditions often included the presence of halogens, alkali, and heavy metals in addition to the purely organic content of the waste forms. A particular refractory composition, a phosphate bonded high alumina/chromia plastic, showed far superior resistance. Based on these test data, the entire primary chamber hearth, refractory curbing around the underfire combustion air ports, and ash dropout door lining have been replaced with the alumina/chromia refractory in both brick and plastic form.

For chloride corrosion resistance, budget constraints during initial construction of the CAI specified fiberglass reinforced plastic (FRP) piping throughout the aqueous effluent gas scrub system. To maximize reliability with mechanical strength and corrosion resistance, all FRP piping is now being replaced with high Nickel alloy Hastelloy C276 materials.

Other major process improvements currently in progress include: 1) consolidation of process controls and data acquisition system, 2) replacement of hot-wire anemometer-type gas flow measuring devices with direct pressure drop flow tubes, 3) process HEPA filter bypass installation in parallel with existing HEPA filter bank to allow quick changeover during incinerator operation, and 4) replacement of an existing process offgas superheater with a unit containing a double bank of heating elements in series for rapid switching in the event of heater failure.

PERMITTING OF THE CAI FOR CHEMICAL WASTE

With the modifications to the CAI discussed and the high degree of containment already built into the process for radioactive waste service, the system was technically ready for hazardous chemical waste incineration in early 1982. What remained was receipt of appropriate EPA permits to conduct incineration research testing and operations.

Permitting for Toxic Substances Control Act (TSCA)

In 1982, the CAI was under contract with the US Environmental Protection Agency's (EPA's) Industrial Environmental Research Laboratory to investigate high concentration PCB combustion conditions other than those specified by the PCB incineration regulations[9] within TSCA. The results of that research are presented in Ref. 10. The tests, conducted in June 1982, served to add to an incineration technology base at Los Alamos already established for radioactive wastes. Some DOE facilities have generated and are storing mixed radioactive/chemical wastes including TRU-contaminated PCBs; however, commercial incineration facilities licensed under TSCA are unable to accept such material. Because of the lack of acceptable treatment options for such wastes, it was decided that the Los Alamos CAI should pursue a TSCA permit. Complete data from the research testing were submitted to EPA's Region VI office in May 1983 as trial burn data in support of a PCB incineration permit application. The Los Alamos CAI was granted a TSCA permit in May 1984 and has so far incinerated 1514 L (400 gal) of TRU-contaminated high concentration PCB oils.

Permitting for Resource Conservation and Recovery Act (RCRA)

Los Alamos National Laboratory generates a large array of hazardous chemical wastes in quantities ranging from a few milliliters in small bottles to thousands of liters stored in drums. Regulation of this hazardous waste falls under RCRA. A goal has been set to treat as much of this waste as feasible in the CAI. Since a TSCA incineration permit limits chemical waste incineration to a single class of compounds - polychlorinated biphenyls, a RCRA permit is also required.

In conjunction with an outside contractor, a RCRA trial burn plan was prepared and submitted to EPA. The approach of the plan is to demonstrate incineration of carbon tetrachloride (CCl_4) as the principal organic hazardous constituent (POHC) in a synthetic waste stream fed to the incinerator. Carbon tetrachloride has an extremely low heat of combustion and a high thermal stability, two measures of incinerability[11]. The rationale is that CCl_4 has a very high rank (fourth highest) on EPA's Ranking of Incinerability List and the permit will allow incineration of all other RCRA Appendix VIII constituents lower on this list. The RCRA trial burn is scheduled for late Spring 1986.

FUTURE PLANS

The Los Alamos CAI will continue to remain active in incineration research and development activities. However, greater emphasis will continue to be placed on establishing the CAI as an interim operations-based incinerator. Process upgrade is in progress to meet the goal of production incineration of Los Alamos-generated solid combustible TRU waste in FY 86. Receipt of a RCRA incineration permit will complement the TSCA permit already in hand and allow incineration treatment of Laboratory-generated hazardous chemical and mixed wastes.

REFERENCES

1. A. S. NEULS, W. E. DRAPER, R. A. KOENIG, J. M. NEWMYER, and C. L. WARNER, "The Los Alamos Controlled Air Incinerator for Radioactive Waste," LA-9427, Vols. I and II, Los Alamos National Laboratory (1982).

2. L. A. STRETZ, L. C. BORDUIN, W. E. DRAPER, R. A. KOENIG, and J. S. VAVRUSKA, "Controlled Air Incineration of Hazardous Chemical Waste at the Los Alamos National Laboratory," Proc. Waste Management '82 Symposium, Tucson, Arizona, March 8 - 11, 1982, Vol. 1, p. 281, (1982).

3. J. S. VAVRUSKA, L. A. STRETZ, and L. C. BORDUIN, "Hazardous and Radioactive Waste Incineration Studies at Los Alamos," LA-UR-81-1170, presented at ASME/USEPA Hazardous Waste Incineration Conference, Williamsburg, Virginia, May 27-28, 1981.

4. C. L. WARNER, Ed., "Final Safety Analysis Report for the Transuranic Contaminated Solid Waste Treatment Development Facility," LA-7971-MS, Los Alamos Scientific Laboratory (1979).

5. "Assessment of Incineration as a Treatment Method for Liquid Organic Hazardous Wastes," US Environmental Protection Agency, Office of Policy, Planning and Evaluation, Washington, DC, March 1985.

6. "Industrial Burners," Trane Thermal Engineering Bulletin No. 143-A, Trane Thermal Company, Conschohocken, PA, 1976.

7. L. A. STRETZ and J. S. VAVRUSKA, "Controlled Air Incineration of Pentachlorophenol-Treated Wood," EPA-600/2-84-089, prepared for USEPA Industrial Environmental Research Laboratory, Cincinnati, Ohio, Los Alamos National Laboratory (1984).

8. J. S. VAVRUSKA and L. C. BORDUIN, "Commercial Incineration Demonstration," LA-UR-82-2708, Los Alamos National Laboratory (1982).

9. Federal Register, Code of Federal Regulations, 40 CFR Part 761.70.

10. J. S. VAVRUSKA, "Research Incineration of Polychlorinated Biphenyls at the Los Alamos National Laboratory," LA-UR-83-1929, Internal Document, Los Alamos National Laboratory (1983).

11. "Guidance Manual for Hazardous Waste Incinerator Permits," US Environmental Protection Agency, Office of Solid Waste, Washington, DC, Draft, March 1983.

LOS ALAMOS NAT'L LAB.
LIB. REPT. COLLECTION
RECEIVED

'85 SEP 20 PM 1 41