NOTICE

CERTAIN DATA CONTAINED IN THIS DOCUMENT MAY BE DIFFICULT TO READ IN MICROFICHE PRODUCTS.

LA-UR-[redacted]39

LA-UR--92-39

DE93 000340

Separation of Technetium from Ruthenium After the Accelerator Transmutation of Technetium

[illegible] D. Abney, Norman C. Schroeder

Scott A. Kinkead and Moses Attrep, Jr.

[illegible]

[illegible]

MASTER

DISTRIBUTION OF THIS DOCUMENT IS UNLIMITED

DISCLAIMER

This report was prepared as an account of work sponsored by an agency of the United States Government. Neither the United States Government nor any agency thereof, nor any of their employees, makes any warranty, express or implied, or assumes any legal liability or responsibility for the accuracy, completeness, or usefulness of any information, apparatus, product, or process disclosed, or represents that its use would not infringe privately owned rights. Reference herein to any specific commercial product, process, or service by trade name, trademark, manufacturer, or otherwise does not necessarily constitute or imply its endorsement, recommendation, or favoring by the United States Government or any agency thereof. The views and opinions of authors expressed herein do not necessarily state or reflect those of the

I. INTRODUCTION

Technetium 99 represents one of the greatest challenges for the nuclear industry. This is due in part from the fact that the fission yield for the 99 isobar chain is large (e.g. 6.1% for ^{235}U thermal neutron induced fission). An example of the severity of this problem is given by the estimate that by the year 2030 there will be 99 metric tons of ^{99}Tc in need of processing from U.S. Light-Water Reactor spent fuels. It is also estimated that at present there is ~2000 kg of technetium in the Hanford tanks alone. This does not account for the technetium at Savannah River and other DOE facilities. Another problem associated with technetium as a waste product is that it forms water soluble anions, TcO_4^-, which easily migrate in the environment. Thus, any geologic repository which contained nuclear wastes bearing this element would suffer from the possibility of technetium migration if the repository were breached by underground water and therefore would fail the EPA 10,000 year requirement for repository stability. Thus, both civilian and defense related waste (e.g., waste that is stored in the double and single shelled tanks at Hanford) must be processed with a strategy for dealing with technetium. A solution to this problem is to remove the technetium from the waste stream and transmute the technetium to stable ruthenium in either a reactor or an accelerator.

$$^{99}Tc \text{ in } [illegible]^{0}Tc \quad [illegible] \quad ^{100}Ru \text{ stable)}$$

Before any processing of nuclear waste streams can be performed *even if transmutation is not performed*, the separations chemistry from the spent fuels or the stored wastes containing technetium must be developed. Unlike earlier separation schemes, a crucial feature of partitioning schemes supporting transmutation is minimizing or recycling the various waste streams which arise. Likewise, before any transmutation experiments are performed the separation chemistry of ruthenium from technetium must also be developed. This report details some of the separation schemes possible for the separation of technetium and ruthenium.

II. OBJECTIVE

[illegible] separating ruthenium from technetium in the [illegible] Transmutation of Waste) technetium loop as the baseline

Assumption: Technetium-99 will be provided in a purity and form suitable for transmutation.

III BASELINE TECHNOLOGY

The published results of Roberts, Smith and Wheelwright (1962) demonstrated [illegible] can be separated from technetium with separation factors on the [illegible]. This scheme has been adopted as the baseline process for the [illegible] of Ru from Tc and in modified form is illustrated in Figure 1. An essential component of this process is the selective formation of nitrosyl ruthenium nitrate cationic species in the presence of TcO_4. The formation of cationic ruthenium complexes allows the scavenging of ruthenium on a cation exchange column.[2]

Figure 1.

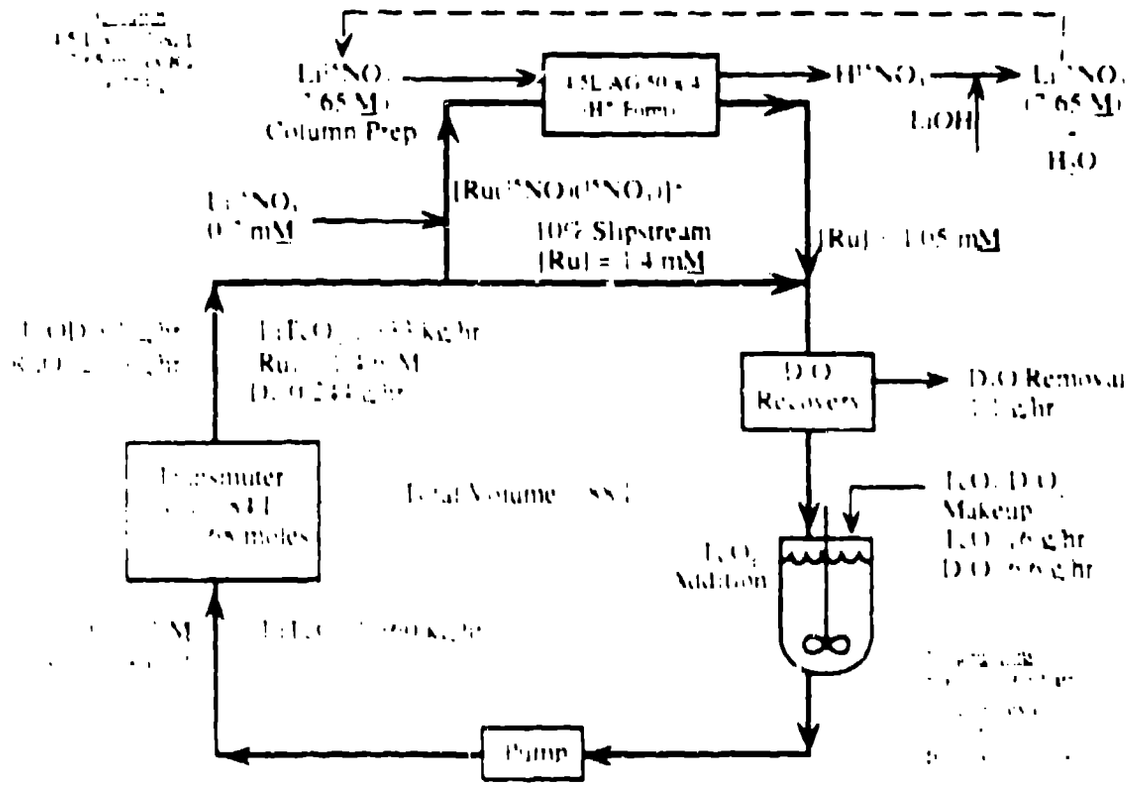

The important reactions occurring in this process are the following

$$TcO_2 + 3/2\ D_2O_2 \longrightarrow DTcO_4 + D_2O$$
$$LiOD + DTcO_4 \longrightarrow LiTcO_4 + D_2O$$

and

$$LiTcO_4 + \beta^- \longrightarrow RuO_4 + Li^+ + \beta^-$$
$$Li^+ + D_2O \longrightarrow LiOD + 1/2\ D_2$$

and

$$RuO_4 + D_2O_2 \longrightarrow RuO_2 + D_2O + 3/2\ O_2$$
$$4\ RuO_4 + 4\ LiOD \longrightarrow 4\ LiRuO_4 + O_2 + 2\ D_2O$$

Therefore mass balances will require the accounting of water formation and destruction for each of these processes. It will also be required to remove any oxygen and deuterium gases formed chemically and radiolytically. The slip stream shown in Figure 1 is proposed as 10% of the flow rate. This fraction (an ~3% Ru removal rate per hour) will be modeled to optimize the removal of ruthenium resulting in a steady-state minimum concentration of ruthenium flowing through the transmuter. The reaction of ruthenium tetroxide with peroxide forming solid ruthenium dioxide is also a significant impediment requiring either a continual filtration step to remove the solids formed (see Filtration under Advanced Concepts) or potential trapping of the solid on the top of the cation exchange column. Another means of preventing this reduction to RuO_2 is to use only a stoichiometric amount of peroxide in the TcO_2 dissolution make-up step. It should also be noted that the form of ruthenium coming out of the transmuter will probably be RuO_4 since RuO_4 is known to react with base.[3] No generation of D_2O_2 is shown in the transmuter as described in Figure 1. This assumption is undoubtedly not valid.

It is assumed that the solubilities of RuO_4 and TcO_4 should not impair our ability to perform the transmutation reaction. Available data as shown in Table [illegible] support this assumption.

Table 1 Solubilities (g L⁻¹) of relevant technetium and ruthenium species as compared with analogous perrhenate and perchlorate anions

	NH_4	Li	Na	K	Rb	Cs
TcO_4			2000	128		4
ReO_4	[illegible]		1000	12.1		
ClO_4	[illegible]	600	2000	7.5	5	20
RuO_4			v sol	s sol		
RuO_4^{2-}				v sol		

IV ADVANCED CONCEPTS

[illegible] exchange technology was chosen as the baseline due to published separation factors for technetium and ruthenium. Other technologies may be more attractive since it may be possible to reduce the amount of waste generated as well as improving the separation factors. The following advanced concepts for technetium separation are described in order of perceived attractiveness.

A. Ozonolysis

The flow loop proposed in Figure 1 has several disadvantages. First, no cationic complexes of ruthenium are formed in a simple $LiTcO_4$ in D_2O D_2O_2 solution. This requires addition of $^{15}NO_3$ to the slip-stream to form cationic nitrosylruthenium nitrate complexes. Second, if ruthenium is not eluted from the resin valuable ^{15}N will be lost. Third, disposal of the saturated resin columns will generate a minimum of 11,700 pounds (dry weight) of waste from the transmutation of 4000 pounds (= 2000 kg) of technetium. Fourth, radiolysis of the resin may introduce unwanted species into the transmutation stream. For these reasons, an alternative to ion-exchange technology is attractive.

[illegible] offers the possibility of separating ruthenium while at the same time [illegible] the amount of waste produced.[4] This method of separating RuO_4 [illegible] technetium is shown in Figure 2. Important differences in this scheme are [illegible] stripped from the solution prior to the ozonolysis step, thus eliminating [illegible] of reactive O_2/D_2 gas mixtures in the main transmutation loop.

2) O_3 sparging removes RuO_4. 3) The D_2O trap removes 80% of aerosol transported technetium from the RuO_4/O_3 stream thus increasing the purity of the final ruthenium product. 4) RuO_4 is converted to Li_2RuO_4 in a LiOD trap. 5) Residual O_2 is recycled through an ozone generator. 6) D_2 can be used to form Ru metal from ruthenium product with the D_2O formed being recycled into the loop. The main advantage of this system is waste minimization with the products being Ru metal and O_2.

Figure 2.

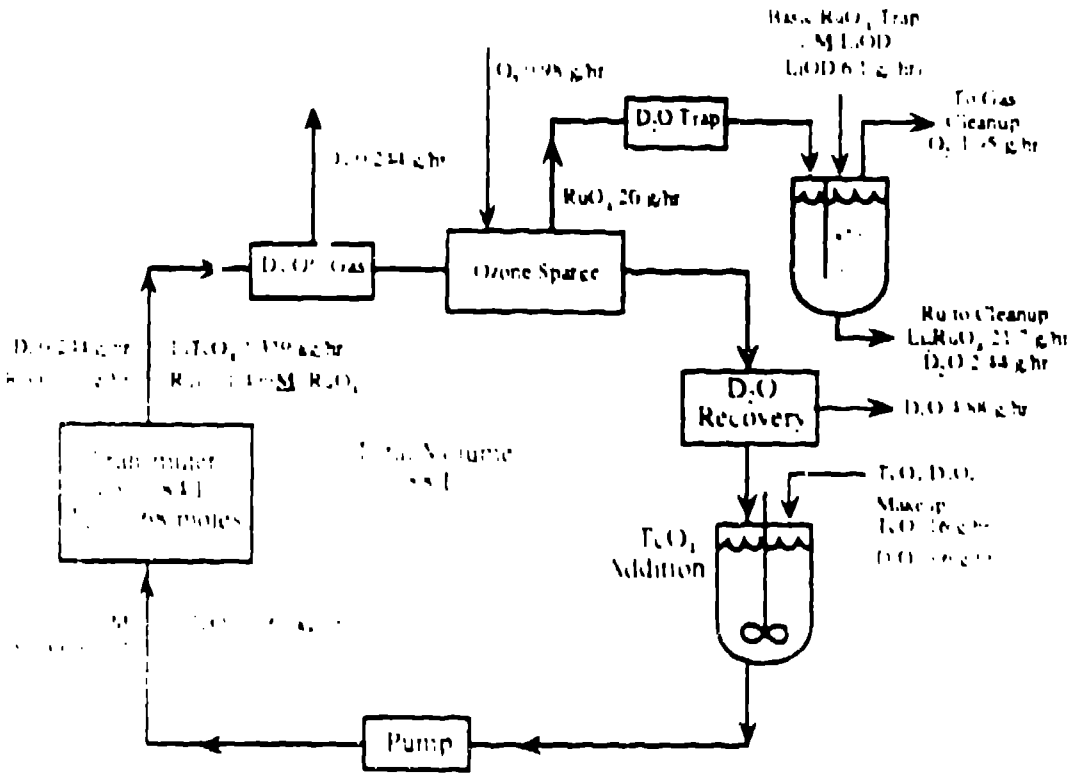

B. Filtration

The insolubility of RuO_4 as well as RuO_4^- and RuO_4^{2-} for reduction to solid RuO_2 offers the possibility to selectively remove ruthenium by the physical means of filtration. Filtration techniques have been used on an industrial scale for many years and is therefore a mature technology. As an adjunct to this method, it may be possible to enhance the reduction of ruthenium by using a filter media such

is polyethylene beads This should increase the ruthenium reduction rate in addition to the absorption of solid RuO_2 The proposed flowsheet utilizing [illegible] is shown in Figure 3

Figure 3.

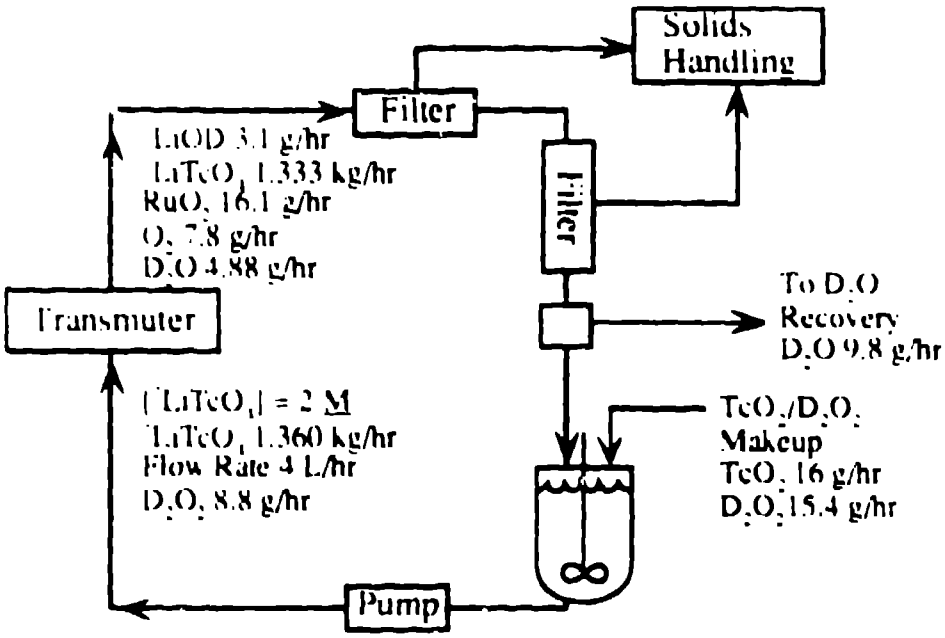

[illegible] to this flowsheet is the efficiency of the ruthenium filtration The reason being that a steady-state concentration of ruthenium must be sufficiently low so as to minimize the production of radioactive isotopes i e , $^{103,106}Ru$

C Magnetic Separation

Technetium in the oxidation state of seven as TeO_4^- has a noble gas electronic configuration and as such is diamagnetic However the many reduced oxidation states of ruthenium are all paramagnetic This difference in magnetism offers the possibility to separate these metals by the technique known as Magnetic Separation This technology has been used for years by [illegible] and geochemists to separate minerals and rocks Experimental [illegible] have shown that it is possible to separate plutonium from matrices such as [illegible] slag [illegible] Other results found in the literature show that it is possible to use this technique on solid suspensions in aqueous media Thus

We believe it should be possible to separate solid RuO_2 and other reduced ruthenium species from an aqueous slurry. The flowsheet developed for this methodology is shown in Figure 4.

Figure 4.

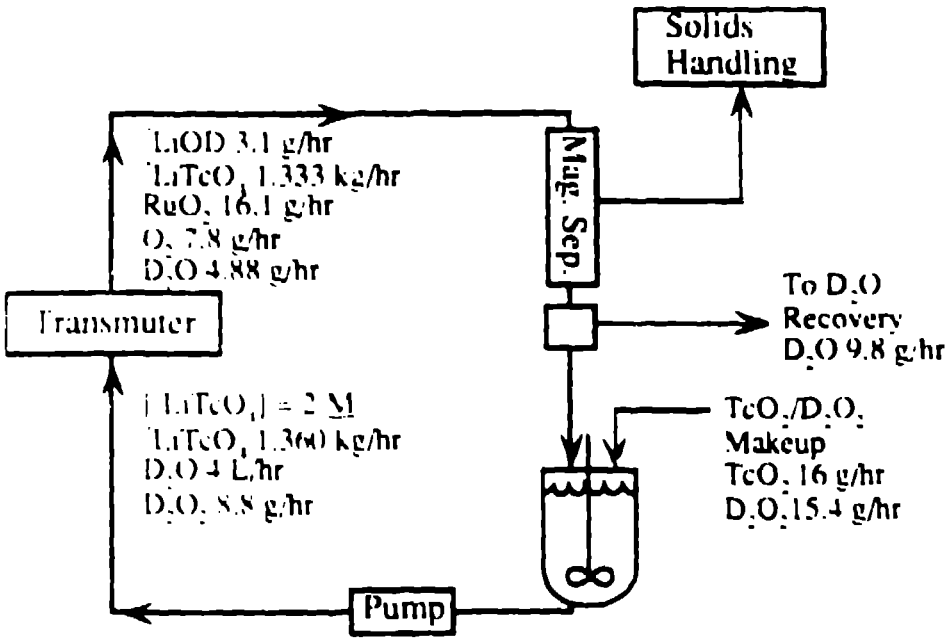

D. Extraction

Extraction of RuO_4 into CCl_4, though effective, presents many problems. First, oxidation state adjustment will be required to maintain the ruthenium as RuO_4 so that it may be extracted. Second, it must be back extracted into base. Third, it produces a mixed waste stream. Fourth, radiolysis of the CCl_4 may introduce unwanted products into the transmutation stream. For these reasons, no further development of this process was undertaken.

E. Electrodeposition

Oak Ridge National Laboratory has expressed an interest in examining the selective electrodeposition of technetium versus ruthenium. Because technetium is easier to reduce to the metallic state as compared to ruthenium, it may be possible to separate technetium selectively.

F Fluorination

The basic components of the aqueous- and fluoride-based process for technetium burn-up consists of the technetium feed stock, probably TcO_2 or Tc_2O_7, a dissolution step in D_2O assisted by D_2O_2 as the oxidant, the transmuter, a technetium/ruthenium drying step, fluorination (possibly several steps to take advantage of favorable kinetics), a means of ruthenium separation from technetium, and finally a reduction of the remaining technetium to be returned to the transmuter. This process is graphically depicted in Figure 5.

Figure 5.

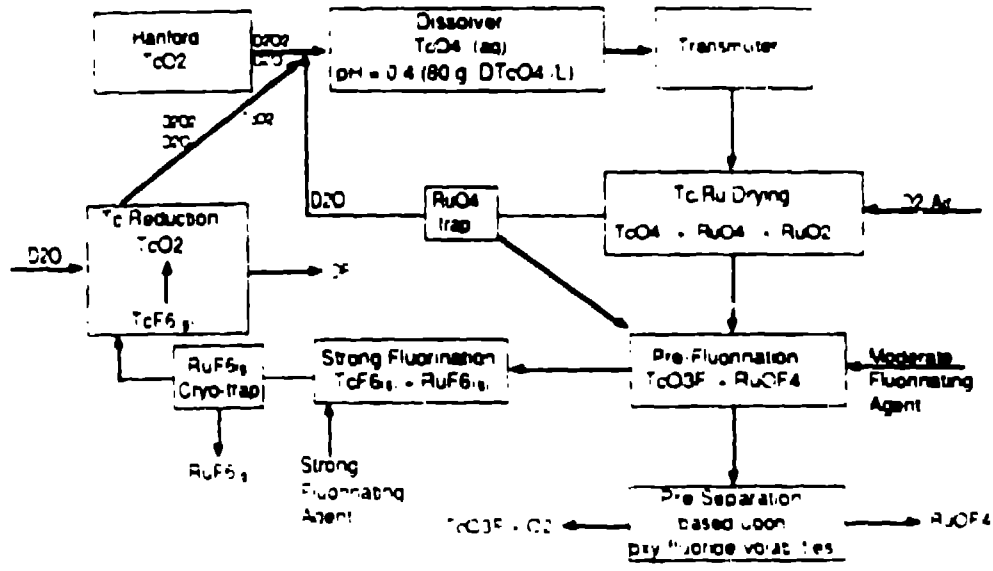

While this process greatly reduces the amount of waste generated as compared to the ion exchange technique, the main disadvantage of this process is that a large amount of technetium is separated from a relatively small amount of ruthenium. Therefore, this process is being pursued because it may have applications to separation problems other than those associated with the transmutation of technetium.

G. Pyrolysis

Technetium volatilization Tc_2O_7 is another possibility for separating technetium and ruthenium. Like the fluorination process, it also suffers from the disadvantage of separating a large amount of technetium form a small amount of ruthenium. Therefore this process is deemed not very attractive.

V. ISSUES FOR CONSIDERATION

Issues for Consideration:

1. Radiolysis--Effect on systems chemistry
2. Tritium production: D(n,γ)T
3. Lithium burn-up (Helium-4 production)
4. Tc fate in system (plating out)
5. Ru fate in system (plating out)
6. Waste streams
7. Ru form in final waste--suggest metal or oxide.
8. Quantity of D2O needed and supply D2O2.
9. Design and size of plant
10. Gas handling needs

VI. CONCLUSIONS

VII. REFERENCES

1. F.P. Roberts, F.M. Smith, and E.J. Wheelwnght, "Recovery and Purification of Technetium-99 From Neutralized PUREX Wastes," Hanford Works Report, HW-SA-2581, 1962.
2. B. P. Nikol'skii, E. I. Il'enko, "Mechanism of the Sorption of Nitrate Complexes of Nitrosoruthenium on Ion-Exchange Resins," *Radiokhimiya*, **1966**, *8* (3), 296-304.
3. G.P. Nikitina, Y.E. Ivanov, V.P. Egorova, M.F. Pushlenkov, and V.G. Shumkov, "Reduction Kinetics of Ruthenium Tetroxide in Alkaline Solutions," *Kinetika i Kataliz*, **1973**, 14(6), 1428.
4. L.H. Baetsle, R. Odoj, E. Merz, (eds.), "Influence of the reprocessing flow sheet on the HLW solidification technology," Proceedings of the international seminar on chemistry and process engineering for high-level liquid waste

:olidification Julich, F R. Germany, Jun 1, **1981**. Report No.: Juel-Conf-42-Vol 1 CONF-810650-Vol 1, p. 229-251.