Conf-920607--16
Conf-9206181--1

Los Alamos National Laboratory is operated by the University of California for the United States Department of Energy under contract W-7405-ENG-36

LA-UR--92-1532

DE92 015250

TITLE MOLECULAR SIEVE REGENERATION SYSTEM FOR ASSAYING HTO FROM DETRITIATION SYSTEMS

AUTHOR(S) J. E. Nasise and J. L. Anderson
Tritium Science & Technology Group
Materials Science & Technology Division

Y. Naruse
Japan Atomic Energy Research Institute

SUBMITTED TO 1992 Annual Meeting of American Nuclear Society/10th Topical Meeting on Technology of Fusion Energy/Risk Management
June 7-11, 1992, Boston, Massachusetts

By acceptance of this article, the publisher recognizes that the U.S. Government retains a nonexclusive, royalty-free license to publish or reproduce the published form of this contribution, or to allow others to do so, for U.S. Government purposes.

The Los Alamos National Laboratory requests that the publisher identify this article as work performed under the auspices of the U.S. Department of Energy.

Los Alamos National Laboratory
Los Alamos, New Mexico 87545

MASTER

FORM NO 836 R4
ST NO 2629 5/81

MOLECULAR SIEVE REGENERATION SYSTEM FOR ASSAYING HTO FROM DETRITATION SYSTEMS

J. E. NASISE and J. L. ANDERSON*
Los Alamos National Laboratory
Mail Stop C348
Los Alamos, NM 87545
(505) 667-1459

Y. NARUSE
Japan Atomic Energy Research Institute
Tokai, Ibaraki, 319-11 Japan
(0792) 82-6390

ABSTRACT

A Molecular Sieve Regeneration System (MSRS) is being added to the existing Tritium Waste Treatment system (TWT) within the Tritium Systems Test Assembly (TSTA) at the Los Alamos National Laboratory. This system is an upgrade to the TWT to provide accurate measurements of the liquid waste generated from this system. Within the TWT, hydrogen isotopes are removed from the effluent gas stream by the catalytic conversion to water and the subsequent removal of water by molecular sieve trapping prior to the release to the environment. Within the TWT and similar systems, molecular sieve regeneration is required to rejuvenate the beds. The major difference of the MSRS and other regeneration systems is the capability of direct tritium assay of long-term storage waste containers. This is accomplished with loop-flow regeneration, water collection, and tritiated water assay by scintillation and calorimetric techniques. This paper describes the MSRS in detail and how it is interfaced with the Tritium Waste Treatment system.

INTRODUCTION

At TSTA and other tritium facilities, tritium is removed from gaseous waste streams by the catalytic oxidation of elemental tritium and tritiated compounds to water and oxides of carbon and nitrogen, and the subsequent removal of the tritiated waste water from the effluent gas stream by molecular sieve trapping[1]. A major environmental concern is the release of tritium from buried tritium waste containers due to the potential pressure build-up from radiolysis. To predict this, you must know the quantity of tritium in the long-term storage container to a high accuracy. If an aqueous tritium recovery capability is later developed at Los Alamos, the liquid HTO from the MSRS can be transferred directly to the new system without storing the HTO on molecular sieve.

*This work is supported by the US Department of Energy, Office of Fusion Energy.

At TSTA, molecular sieve regeneration is accomplished by heating a nitrogen gas stream, passing the hot gas through a selected bed, trapping the regenerated water in a long-term storage container filled with molecular sieve, and finally recycling the exit gas to the inlet of the TWT. At the Tokamak Fusion Test Reactor (TFTR) the Tritium Regeneration System (TRS)[2] is designed to provide low dew-point regeneration gas by passing the gas through two disposable molecular sieve beds. Currently, these facilities do not assay directly their waste containers; tritium inventory amounts are determined from system radiation monitors.

The TWT operates with one MSB on-line at a time. When "break through" occurs the bed is valved off-line and for tritium accounting and inventory purposes is assigned the amount of tritium processed by the TWT while that specific MSB was on-line. This assay value is determined by subtracting the integrated exit radiation from the integrated entering radiation. This assay method is termed "by difference" and can lead to significant errors in the tritium content assigned to individual waste containers. At Los Alamos, assay "by difference" is no longer allowed for long-term storage of radioactive wastes. The MSRS was designed to significantly reduce the possible errors now associated with the current assay method used at TSTA and to comply with the Department of Energy (DOE) Order 5633.3 which requires a +/-15 percent assay accuracy limit for tritium.

MSRS SYSTEM DESCRIPTION

The MSRS is designed to directly assay long-term storage containers, reduce the regeneration gas loading to the TWT, and provide a known low dew-point regeneration gas. To provide a low dew-point gas and to reduce the gas loading to the TWT during regeneration, a closed-loop design was selected. Computer control was selected to provide consistent MSRS operations and to improve safety. Once regeneration is initiated from the

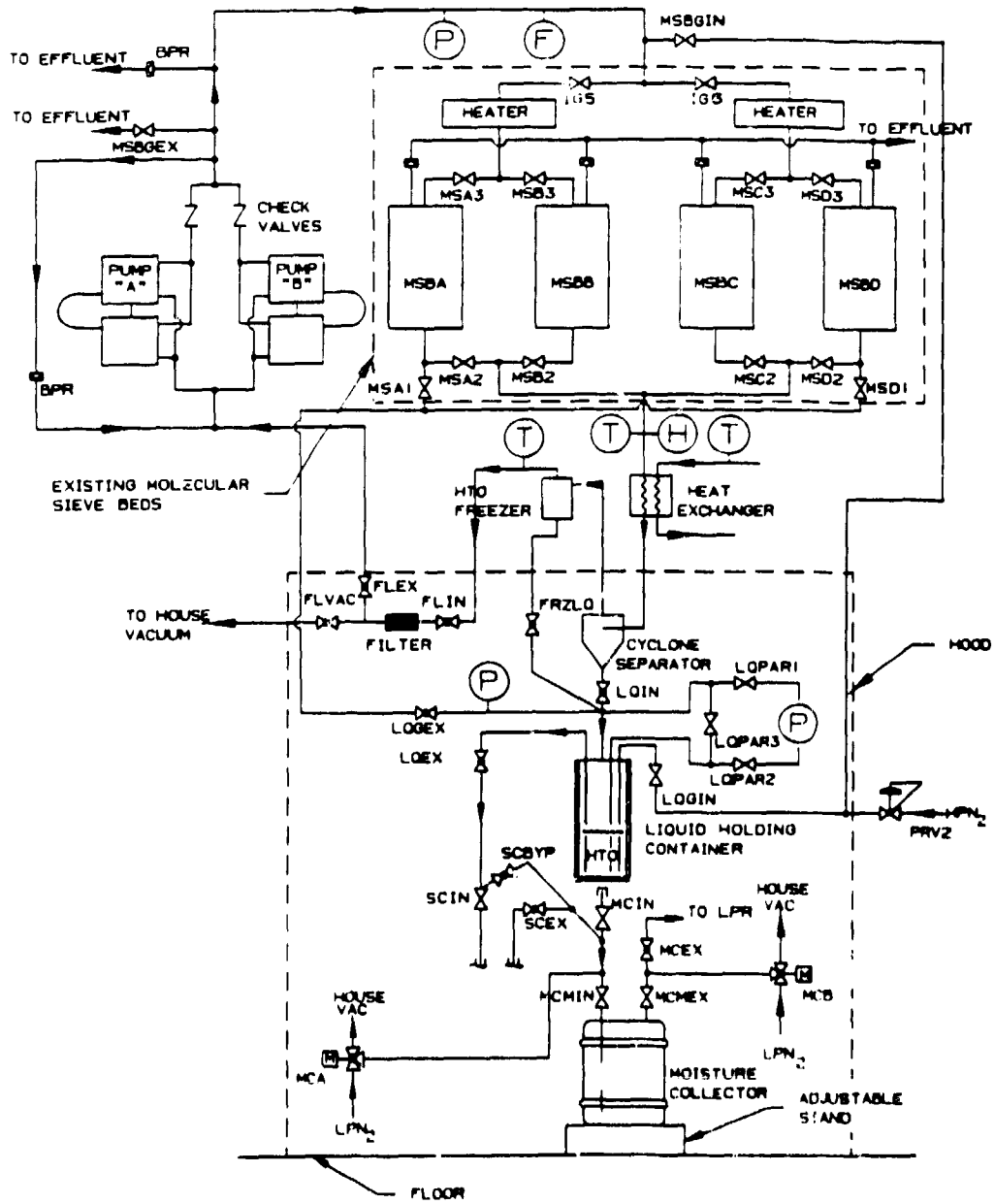

Figure 1. Molecular Sieve Regeneration System flow diagram.

TSTA control room to regenerate a MSB the following operations are accomplished: Loop-flow, Hold-Up, Assay, and Collection. Each of these operations are described below in detail. A flow diagram of the MSRS is shown in Figure 1.

Loop-Flow

When the TSTA computer is commanded to regenerate a MSB, the following initial operations are performed: (1)the Liquid Holding Tank pressure transducer is calibrated; (2)the MSRS valves are configured for loop-flow; (3)the HTO freezer is filled with liquid nitrogen; (4)the heat exchanger chiller is started; (5)the selected MSB heater is activated; (6)a circulation pump is turned on and; (7)the MSRS loop is pressurized with nitrogen to 483 kPa (3600 torr).

During loop-flow, nitrogen gas is heated by a 10 kW resistance heater. The heated gas passes through the MSB in a counter-flow direction to the normal process flow. A two-phase mixture of steam and water at an average temperature of 380 K exits the MSB and enters a horizontal condensing U-tube type heat exchanger cooled with a 25 wt. percent ethylene glycol/water mixture from a 35 kW chiller. The gas exits the heat exchanger at 280 K and enters a cyclone separator that separates the condensate from the gas. Condensate from the cyclone separator falls into a Liquid Holding Tank and the remaining loop-gas enters a liquid-nitrogen-cooled freezer where the remaining water is removed from the loop-gas to a dew point of 193 K (0.68 ppm). From the freezer the loop-gas passes through a 5 μm filter to remove any particulate prior to re-entering the circulation pumps.

Loop-flow and total flow are measured with a flow meter/totalizer. A moisture analyzer provides the TSTA computer with data to determine the progress of the regeneration cycle by sampling the exit bed gas. This instrument permits fast and accurate readings within a range of 123 to 123,000 ppm water. When a pre-determined moisture value is reached, the computer stops loop-flow and displays a yellow alarm.

System pressure is limited by a Back Pressure Regulator (BPR) set at 517 kPa (3900 torr). Also, each circulation pump is protected by a BPR to limit the differential pressure across the pump. Check valves are provided at the exit of the pumps to prevent back-flow through the off-line pump. LPR loop evacuation is provided by valve MSBGEX and "house-vacuum" evacuation is provided by valve FLVAC.

Hold Up

Once loop flow is completed, the recovered tritiated water is now contained within the Liquid Holding Tank. The hold up phase of the regeneration process consists of measuring the amount of recovered tritiated water from the selected regenerated MSB. To prevent tritiated water handling, a differential-pressure transducer is used to measure the liquid head height. The amount of water within the Liquid Holding Tank can now be calculated by the TSTA computer using the output of the differential-pressure transducer combined with the pre-measured tank volume as a function of height. Calculations show that an accuracy of +/- 7 ml can be obtained using this method.

Assay

Direct assay of the recovered tritiated water from MSB regeneration is the primary function of the MSRS. Two assay techniques are used, calorimetry and scintillation counting. Experience has shown that calorimetry is a more accurate assay method for measuring HTO with concentrations > 18.5 TBq/l (500 Ci/l) and scintillation counting is the preferred method at lower concentrations[3]. To eliminate the risk associated with mechanical feed-throughs, mixing by nitrogen-bubbles was selected. This technique utilizes the mechanical mixing effect from bubbling nitrogen through the liquid. This is accomplished by opening valve LQGIN and LQGEX and passing the contaminated nitrogen through the on-line MSB by opening valve MSA1 or MSD1.

The MSRS provides HTO sampling without personnel exposure. However, scintillation counting at TSTA currently involves direct handling of HTO samples. Therefore, to prevent unnecessary risks calorimetry assaying will always be done first. This is accomplished by closing valve SCBYP and attaching a calorimetry sample vial to valves SCIN and SCEX, see Figure 1. To remove a HTO sample, water is driven from the Liquid Holding Tank through the sample vial and into the Moisture Collector (MC). At TSTA, long-term storage containers are called moisture collectors. During this operation the calorimetry sample vial is filled with one liter of water. To remove the sample, valves LQEX and the sample hand valves are closed and the interconnecting piping is evacuated and purged with nitrogen using valve MCA. The sample vial is now safely removed from the system, capped, placed into a secondary carrying container, transported to the calorimeter, measured, and the results entered into the computer. If the calorimetry result is < 18.5 TBq/l (500 Ci/l) a scintillation sample is taken; if not these results are used for the final measured value.

Scintillation sampling is accomplished by first evacuating and purging the interconnecting piping with nitrogen using valve MCA. The scintillation sample vial is attached to valve SCIN and evacuated using valve MCA. Valve SCIN is closed and HTO in the holding tank is once again mixed and removed to the MC in the same manner used for calorimetry sampling. During the

transfer, a 10 ml sample of water is trapped in the section of line between valve SCIN and valve SCBYP. By simply opening the sample hand valve, the 10 ml sample of HTO is admitted to the sample vial. The vial is removed from the system using the evacuation and purge technique. Scintillation "cocktails" are prepared, counted, and the results entered into the TSTA computer. Calculations show that the total tritium inventory of a MC can be determined to an accuracy of 5 percent.

Collection

The collection phase of the MSRS operation consists of transferring HTO collected in the Liquid Holding Tank and in the sample vials to the MC or long-term storage container. The heat of absorption of the molecular sieve limits the rate at which water can be admitted to the MC. This rate will be determined during "cold" testing. The TWT low pressure receiver or the "house vacuum" is used to initiate flow from the Liquid Holding Tank to the MC. The lids on the scintillation and calorimetry sample vials are tapered to facilitate draining to the MC. Also, the MC pressure is lowered to sub-atmospheric. The TSTA computer tracks the weight of water in the MC and displays the remaining weight that can be added.

Modified stainless steel, 0.14 m^3 capacity, drums rated at 0.55 MPa (4900 torr) filled with Type 13X molecular sieve are used for MSRS moisture collectors. These drums are Department of Transportation (DOT) Type 5C rated containers called DOT-5C containers. MC water loading is limited to 13.61 kg for every 45.4 kg of sieve. Once filled, MC's are removed by first evacuating and purging the interconnecting piping followed by closing the MC's manual valves. A final weight check is performed on each MC prior to packaging for long-term storage.

MSRS COMPONENTS

Valves

Ball valves with Teflon seats are used throughout the TWT and have shown good reliability and acceptable leak rates for this application. Based on this data and the system's flow requirements, ball valves were chosen for the main loop. Two-way ball valves with Teflon seats and pneumatic actuators are used in the main loop. The evacuation and purge valves are three-way ball valves with Teflon seats operated with 24 Vdc electric actuators. For low-flow applications, pneumatically actuated bellows valves with vespel stems are used. All the valves of the MSRS are computer controlled. Also, valve stem positions are sensed and displayed by the TSTA computer.

Circulation Pumps

Circulation is provided by redundant all metal double-bellows pumps with 746 W variable speed motors. These pumps are capable of 0.0035 m^3/s (7.5 scfm) at 0.39 MPa (2800 torr) inlet and 0.52 MPa (3900 torr) outlet pressure running at 1725 rpm. Also, the bellows are capable of 0.69 MPa (4400 torr) system pressures. The integrity of each bellows is monitored by the TSTA computer through pressure sensors. The computer controls the pump speed through a 0-5 Vdc drive.

Heat Exchanger

A horizontal condensing U-tube type heat exchanger fabricated from Type 316 stainless steel condenses the moisture from the regeneration cycle during loop-flow. This is single-pass shell and a four-pass tube-side heat exchanger. The cooling fluid flows in the tubes. A 219 mm diameter shell contains a 0.122 m long tube bundle of 28 U-tubes. The U-tubes are 15.88 mm in diameter set at a 20.6 mm triangular pitch. Condensing surface area is 3.16 m^2. Shell and tubes are designed for a pressure of 1.1 MPa (8500 torr) at 450 K. The tube-side is helium leak tight to 1×10^{-7} atm-cc/s. The bonnet and shell girth flanges are steel with a Type 316 stainless steel weld overlay. The heat exchanger is a "U"-stamped ASME Section VIII coded vessel capable of removing 20 kW of power from the regeneration cycle, twice the power of the current TWT molecular sieve bed heaters.

Chiller

A 35 kW capacity freon-cooled chiller is used to cool the heat exchanger fluid from 287.3 K to 273 K flowing at 37.8 l/s. The chiller utilizes a 0.19 m^3 open integral reservoir-mixing tank. The freon-cooled chiller is outside the main TSTA tritium area due to the size of the unit. Computer control of the chiller is limited to starting and stopping. Also, the supply and return temperatures are read and displayed by the TSTA computer.

Cyclone Separator

A Los Alamos designed, tangentially-fed cyclone separator is used to separate the condensate from the two-phase loop-gas mixture exiting the heat exchanger. Condensate is removed by the spiral flow of the loop-gas through the separator and falls into the Liquid Holding Tank below.

Liquid Holding Tank

Tritiated water from regeneration is contained in a Los Alamos designed 53.5 l capacity Liquid Holding Tank

capable of storing water from four regeneration cycles. A typical regeneration cycle will remove 10 kg of water from a bed. The Liquid Holding Tank is a doubled-walled Type 304 stainless steel vessel. The inner containment reservoir is a "U"-stamped ASME Section VIII coded vessel constructed with no penetrations at the bottom. At TSTA, tanks used to store HTO are required to be "U"-stamped ASME Section VIII coded vessels with double-walls and no penetration at the bottom. Three 9.5 mm diameter by 0.89 mm thick wall tubes 1.6 mm from the bottom are used to measure the head pressure of the liquid, to transfer water from the vessel, and to provide nitrogen-bubble mixing prior to sampling. The central inlet connection is a 25.4 mm diameter by 1.6 mm thick walled tube. The inner containment reservoir is secondarily contained by a 1.6 mm thick outer shell. Two openings at the top of the outer shell provide tritium monitoring for the inner containment reservoir.

HTO Freezer

A Los Alamos designed cryogenic freezer is used to freeze the remaining water from the loop-gas prior to loop-circulation pumping. This HTO freezer is designed to lower the regeneration loop-gas temperature to 193 K. Moisture content in the loop-gas at this temperature is 0.68 ppm. When the freezer is warmed, frost that accumulated on the spiral fins within the freezer liquefies and falls to the bottom. Liquid collected at the bottom of the freezer is drained to the Liquid Holding Tank with valve FRZLQ.

Filter

A Los Alamos designed in-line filter is provided to protect the circulation pumps from molecular sieve particulate. The filter material consists of 40 μm Type 316L stainless steel 25.4 mm in diameter and 101.6 mm long. The 40 μm filter is encapsulated in a Type 316L stainless steel tube, 50.8 mm in diameter and 120.65 mm long.

COSTS

The MSRS is in the final stage of construction. Software, cold testing, and DOE approval remains to be completed. The hardware cost for this system, in 1991 dollars, was $110k. Internal costs not included are software, design, long-term storage containers, and installation.

CONCLUSIONS

The current tritium assay method at TSTA assumes that there is no hold-up in the TWT. Therefore, assay values assigned to long-term storage containers are higher or on the conservative side. However, the amount of tritium assigned to a particular long-term storage container is uncertain. The major difference of the MSRS and other regeneration systems is the capability of direct tritium assay of long-term storage waste containers. The MSRS should significantly reduce the possible errors now associated with the current assay method used at TSTA and other facilities and will comply with DOE Order 5633.3 which requires an assay of +/-15 percent accuracy for tritium. Calculations show that an accuracy within 5 percent should be achieved with the MSRS.

REFERENCES

1. John R. Bartlit, "The Tritium Systems Test Assembly at Los Alamos National Laboratory," Fusion Engineering and Design, 12 (1990) 393-402.
2. M. Tuohy, R. Cherdack, N. H. Lacy, "System Design for Disposal of Tritium at TFTR," Tritium Technology in Fission, Fusion, and Isotopic Applications, 2 (1985) 891-1290.
3. Charles J. Sienkiewicz, James E. Lentz, and Donald V. Wiggins, "Physical Inventory by use of Modeling for the Tritium Aqueous Waste Recovery System," Tritium Technology in Fission, Fusion, and Isotopic Applications, 2 (1985) 891-1290.