LA-UR- 93-1921

Title: BEAM PINGING SWEEPING, SHAKING AND ELECTRON/ION COLLECTING AT THE PROTON STORAGE RING

Author(s): Thomas W. Hardek
Robert J. Macek
Michael A. Plum
Tai-Sen F. Wang

Submitted to: 1993 Particle Accelerator Conference

MASTER

DISCLAIMER

This report was prepared as an account of work sponsored by an agency of the United States Government. Neither the United States Government nor any agency thereof, nor any of their employees, makes any warranty, express or implied, or assumes any legal liability or responsibility for the accuracy, completeness, or usefulness of any information, apparatus, product, or process disclosed, or represents that its use would not infringe privately owned rights. Reference herein to any specific commercial product, process, or service by trade name, trademark, manufacturer, or otherwise does not necessarily constitute or imply its endorsement, recommendation, or favoring by the United States Government or any agency thereof. The views and opinions of authors expressed herein do not necessarily state or reflect those of the United States Government or any agency thereof.

Los Alamos
NATIONAL LABORATORY

Los Alamos National Laboratory, an affirmative action/equal opportunity employer, is operated by the University of California for the U.S. Department of Energy under contract W-7405-ENG-36. By acceptance of this article, the publisher recognizes that the U.S. Government retains a nonexclusive, royalty-free license to publish or reproduce the published form of this contribution, or to allow others to do so, for U.S. Government purposes. The Los Alamos National Laboratory requests that the publisher identify this article as work performed under the auspices of the U.S. Department of Energy.

Form No. 836 R5
St. 2629 10/91

Beam Pinging, Sweeping, Shaking, and Electron/Ion Collecting, at the Proton Storage Ring*

T. Hardek, R. Macek, M. Plum, T.-S. Wang
Los Alamos National Laboratory
MS-H838, PO. Box 1663, Los Alamos, NM 87545 USA

Abstract

We have built, installed and tested a pinger [1] for use as a general diagnostic at the Los Alamos Proton Storage Ring (PSR). Two 4-m-long parallel-plate electrodes with a plate spacing of 10.2 cm provide kicks of up to 1.1 mrad. A pair of solid-state pulsers may be operated in a single-pulse mode for beam pinging (tune measurements) or in a burst mode at up to 700 kHz pulse rates for beam sweeping. During our 1992 operating period we used the pinger for beam sweeping, for beam shaking, for measuring the tune shift, and we have used it as an ion chamber. Using the pinger as an ion chamber during production conditions has yielded some surprising result .

I. INTRODUCTION

In the past we have measured the horizontal tune at high intensity by pulsing the extraction-kicker electrodes at reduced voltages. We have also acquired additional horizontal data by observing coherent motion produced by the charging operation for our Blumlein-configured extraction-kicker modulators; however, there has been no convenient way to make a similar measurement in the vertical plane. During a break in our 1992 operating period we installed a set of vertical pinger electrodes [1] in section 3 of the PSR. We are now capable of pinging the beam vertically and observing vertical coherent motion.

In addition to beam pinging we also have the ability of sweeping beam from the space between beam bunches. Operating at a maximum of 10 kV our pulsers can not remove all the beam in a single kick. We depend on several kicks timed to add up to an effective kick sufficient to completely remove the beam. In practice we adjust the fractional tune to 1/6 and kick every 6 turns. We have also operated with a vertical tune of 1/4 with a kick every 4 turns.

The pinger electrodes may be DC biased and used as clearing electrodes to remove unwanted electrons and ions. A metering device may be added to use the electrodes as an ion chamber and measure the quantity of electrons and ions collected. Preliminary experiments have yielded some confusing results.

* Work performed under the auspices of the U.S. Department of Energy.

We present here an overview of some of the initial data we have collected in pinger and beam-sweeping experiments. We also present results from our measurement of the collected charge with the pinger operated as an ion chamber.

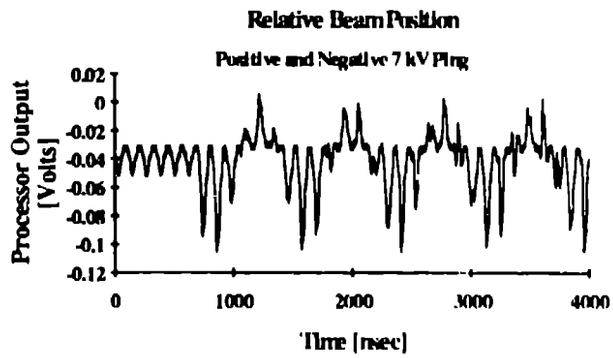

Figure 1: Coherent Beam Motion after a 7 kV Ping

II. BEAM PINGING

We can provide positive and negative 10 kV pulses timed to occur at any selected time within the PSR accumulation cycle. The pulse width is adjustable from 100 nsec to several μsec in width and has rise and fall times of 20 nsec. For beam pinging we adjust the pulse width to one PSR revolution period (360 nsec) and time the kick to occur as the beam bunch passes the pinger electrode. We can observe beam motion with a 30-MHz-bandwidth capacitive pickup system or with strip-line pickups. The strip line pickups differentiate the beam signal complicating analysis so we generally utilize the capacitive pickup system. Figure 1 shows the capacitive pickup output for a single ping late in the injection cycle with full intensity beam stored in the PSR (2.5×10^{13} stored protons). The processing electronics is not normalized to beam intensity so the output retains the shape of the beam bunches. In this trace the circulating beam is offset toward the inner radius. The initial part of the waveform shows negative pulses indicating the beam offset and the oscillations after the ping are centered about the offset central orbit. A spectrum analyzer scan taken with these

conditions gives sidebands at 2.476 MHz and 3.144 MHz with a measured revolution frequency of 2.808 MHz. The resulting full intensity vertical tune is 2.119, compared to a low-intensity single-injected-bunch measured tune of 2.134.

III. BEAM SWEEPING

In the beam sweeping mode we can provide a 100 nsec-long 10 kV-kick at a maximum rate of 700 kHz. The revolution frequency is 2.8 MHz so we can kick every four turns. For normal production we set the vertical tune to 2.173. Only a minor change is necessary to alter the fractional tune to 0.166 and generate a kick every six turns so we have chosen this scenario for our normal sweeping mode. The minimum available pulse width is 100 nsec (full width, half maximum). Figure 2 shows the result of several sequential sweeping pulses. We have set the injected beam bunch length to 100 nsec and have centered the kick on the beam bunch allowing our sweeping pulse to remove all of the injected beam. We have not longitudinally confined the beam so some beam remains at the leading and trailing edges of the kick.

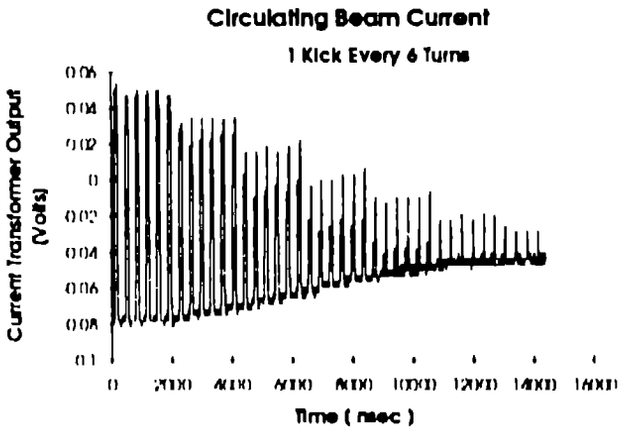

Figure 2: 100 nsec beam bunch kicked every 6 turns

One intended use for our sweeping technique is to completely clear the space between bunches of protons. Only a small amount of protons in the gap between bunches is required to trap electrons and produce the unstable condition we observe at high intensity in the PSR. We have made several attempts to demonstrate stable operation with beam sweeping with varied success. The sweeping pulse is longer than the space between the bunches so we always sweep out some circulating beam. We have been able to replace this lost beam and demonstrate stable operation. In our efforts to increase intensity with beam sweeping we still observe a fast beam loss. We attribute this to either an increase in electrons generated by the beam lost during sweeping or gap filling at rates exceeding the sweeping rate. Additional beam studies will be required to understand this process.

IV. BEAM SHAKING

During the 1990 run period we were able to drive an extraction-kicker electrode with a cw sinusoidal rf signal at a frequency near the lowest horizontal tune frequency. We observed an increase in the instability threshold of about five percent. We have now repeated this experiment using the pinger electrode and demonstrated a similar result for the vertical plane. Driving at about 25 MHz at the 100-watt level (into a 50-ohm load at one end of the electrode) resulted in an abrupt increase in vacuum chamber pressure. There seems to have been some sort of electrical breakdown at voltage levels well below the 10 kV hold-off capability of our electrode system. We have yet to repeat the experiment without beam.

V. ION CHAMBER RESULTS

We have also used the pinger electrodes as an ion chamber by biasing one or both electrodes, and measuring the current thus collected. Ions and electrons from residual gas ionization usually comprise the primary contribution from such a measurement. Other contributions include secondary emission of electrons due to interactions of the beam with the beam pipe and pinger electrodes, and protons from the halo of the beam stopping in the electrodes. There are also strong (150 V peak-to-peak into 50 ohms) ac-coupled signals due to the beam passing by the electrodes. To minimize the effect of these signals we carefully terminated each end of each electrode into 50 ohms, as shown in figure 3.

We have tried various setups, including biasing one electrode and measuring the current on the other electrode, and biasing both electrodes with opposite polarities and measuring the current on one of them. We have also tried to supress the strong ac-coupled signal, due to beam passing by the electrodes, by installing 1 μF shunt capacitors at the vacuum feedthroughs. In all cases, we get the surprising results shown in figure 4. For this figure we have chosen two representative data sets, one with, and one without the shunt capacitors installed at the vacuum feedthroughs. For both measurements we have biased one electrode and measured the current on the other electrode. The two data sets were taken during production conditions, but on different days. We see that they are basically the same except for their relative amplitudes, but we cannot deduce much from this since we have observed large fluctuations in amplitude from one data set to another, apparently due to imperceptible variations in the exact tune of the linac, beam line, and PSR.

We do not fully understand the behavior of the data in the -50 to +50 V region. The collected currents are huge. We have seen up to 15 μA of average collected current which is a large fraction of the 70 μA average injected current. We expect just a few nA of current from residual gas ionization. We suspect some sort of secondary emission of electrons

caused by the interactions of the residual gas ions and electrons with the beam pipe walls and pinger electrodes. The strong ac-coupled signals on the pinger electrodes due to the high-intensity beam pulses may contribute to the unusual peaks in this data. To eliminate this effect we tried injecting low-current dc beam into the ring. Figure 5 shows the results of these measurents, taken at 4 Hz, with 200 μs of accumulation and 500 μs of storage. In this figure the error bars represent the range of current readings observed over a 30-second inteval. The setup was also a bit different from that shown in Fig. 4: The bottom electrode was connected directly to a power supply, with no 50-ohm terminations at either end, and the low-pass filter on the picoammeter was slightly different. This data is about what one would expect showing a gradual climb to a plateau at a couple thousand volts. We hope that additional measurements scheduled for this summer will shed some more light on our puzzling data.

VI. CONCLUSIONS

We have a new diagnostic tool to study PSR performance. We have thus far had only limited opportunities to explore the uses of this new tool and have generated some confusing but interesting results. This year we hope to clarify these results and complete additional beam experiments, possibly including a detailed beam transfer function measurement.

VII. REFERENCES

[1] "A Pinger System for the Los Alamos Proton Storage Ring", T. W. Hardek and H. A. Thiessen, *1991 Particle Accelerator Conference Proceedings*, pp. 866-868.

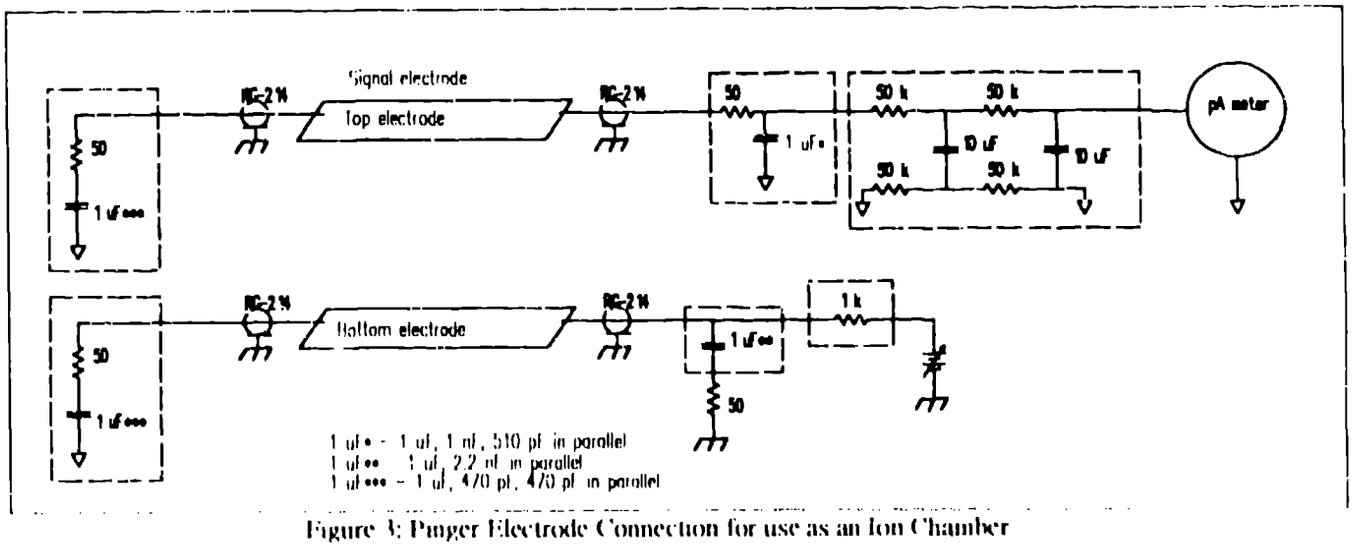

Figure 3: Pinger Electrode Connection for use as an Ion Chamber

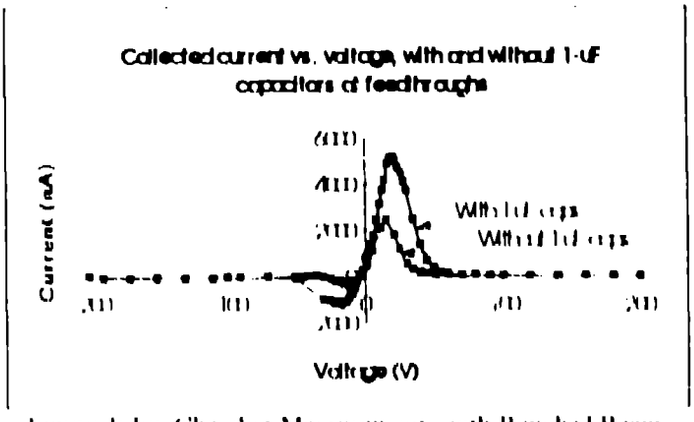

Figure 4: Ion Chamber Measurements with Bunched Beam

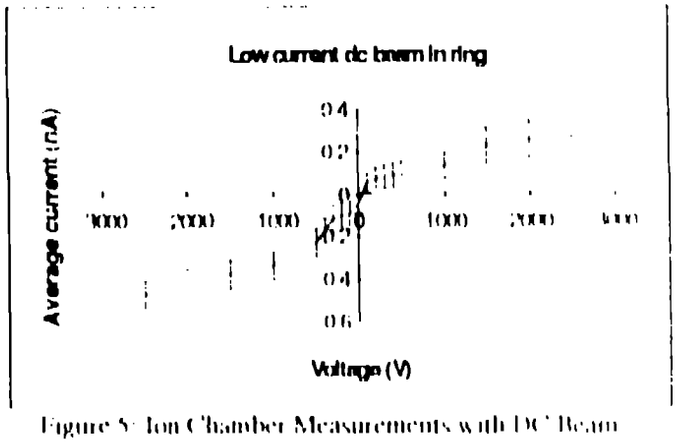

Figure 5: Ion Chamber Measurements with DC Beam