Waste Management Division
PO Box 1663, K499
Los Alamos, New Mexico 87545
Phone/Fax: 505-665-0493/505-667-1945

National Nuclear Security Administration
Los Alamos Field Office, A316
3747 West Jemez Road
Los Alamos, New Mexico, 87545
Phone/Fax: 505-667-5794/505-667-5948

Date: JUL 03 2014
Symbol: WM-DO-14-048
LAUR: See Attached List
Locates Action No: U1401701

Mr. Ryan Flynn, Secretary
New Mexico Environment Department
2905 Rodeo Park Drive, Building 1
Santa Fe, NM 87505-6303

Dear Mr. Flynn:

Subject: Response to Request for Information on Management of Waste at Los Alamos National Laboratory, EPA ID #NM890010515

The purpose of this letter is to provide a response to the information request received by letter from the New Mexico Environment Department (NMED) dated June 16, 2014. The U.S. Department of Energy (DOE) and the Los Alamos National Security, LLC (LANS), collectively the Permittees, provide the following responses to the request for information. The enclosures described below provide the information requested by the NMED.

Enclosure 1 includes a list of the current standard operating procedures used for packaging waste, for repacking waste, for absorbing liquids, and for neutralizing waste at Los Alamos National Laboratory (LANL) facilities, as well as copies of the procedures. Many of these are operating procedures for nuclear facilities that must undergo a classification review before they can be released outside the Laboratory. Those that have been approved for release are enclosed herewith. Seven additional procedures will be delivered to NMED as they are approved for release, which is proceeding as quickly as possible. Individual procedures are separated within the enclosure by title pages.

Enclosure 2 contains a list of LANL locations, by Technical Area (TA), Building and waste type, where hazardous waste, mixed waste, and non-hazardous transuranic and low-level radioactive waste has been generated at LANL post 1979. As was the case with some procedures, certain locations within nuclear facilities in secured LANL areas must undergo a classification review before the information can be released outside the Laboratory. This enclosure represents the most complete listing that can be created in the extremely compressed time frame associated with this request. LANL will continue to review its

information in order to ensure that all waste generation locations have been identified as requested by the NMED.

Enclosure 3 provides a list of current LANL policies and procedures related to the generation and management of waste at LANL locations. Procedures are listed by descriptor and unique document number. This list includes Central Characterization Project (CCP) procedures which were supplied by CCP for inclusion in this response even though CCP is a separate entity from LANS and is not a Permittee. This list includes LANL and CCP procedures that describe or specify waste generation processes; hazardous waste determinations; assignment of Environmental Protection Agency (EPA) Hazardous Waste Numbers; waste characterization; packaging, repackaging, and other processing activities; treatment; and storage activities.

If you have any questions or comments relating to this submittal please contact Bob Dodge, LANS, at (505) 665-0493 or Gene Turner, DOE, at (505) 667-5794.

Sincerely,

Robert L. Dodge
Division Leader
Waste Management Division
Los Alamos National Security LLC

Sincerely,

Gene E. Turner
Environmental Permitting Manager
Environmental Projects Office
Los Alamos Field Office
U.S. Department of Energy

AMD:GET/lm

Enclosures: (1) Waste Management Standard Operating Procedures
(2) List of Waste Generation Locations at Los Alamos National Laboratory
(3) List of Current Standard Operating Procedures for Waste Management Activities at Los Alamos National Laboratory

Cy: Tom Blaine, NMED, Santa Fe, NM, (E-File)
John Kieling, NMED, Santa Fe, NM (E-File)
Steve Pullen, NMED/HWB, Santa Fe, NM, (E-File)
Timothy Hall, NMED/HWB, Santa Fe, NM, (E-File)
Trais Kliphuis, NMED, Santa Fe, NM, (E-File)
Peter Maggiore, NA-LA, (E-File)
Lisa Cummings, NA-LA, (E-File)
Eric L. Trujillo, NA-LA, (E-File)
Carl A. Beard, PADOPS, (E-File to aosburn@lanl.gov)
Michael T. Brandt, ADESH, (E-File to lindasalazar@lanl.gov)
Jeffrey D. Mousseau, ADEP, (E-File)
Daniel R. Cox, ADEP, (E-File)
Victoria A. George, REG-DO, (E-File)
Anthony R. Grieggs, ENV-CP, (E-File)
Deborah K. Woitte, LC-ESH, (E-File)
Mark P. Haagenstad, ENV-CP, (E-File)
lasomailbox@nnsa.doe.gov, (E-File)

locatesteam@lanl.gov, (E-File)
wm-correspondence@lanl.gov, (E-File)

RECEIVED
JUL - 3 2014
NMED
Hazardous Waste Bureau

COPY

Los Alamos
NATIONAL LABORATORY
EST. 1943

Waste Management Division
PO Box 1663, K499
Los Alamos, New Mexico 87545
Phone/Fax: 505-665-0493/505-667-1945

National Nuclear Security Administration
Los Alamos Field Office, A316
3747 West Jemez Road
Los Alamos, New Mexico, 87545
Phone/Fax: 505-667-5794/505-667-5948

Date: JUL 03 2014
Symbol: WM-DO-14-048
LAUR: See Attached List
Locates Action No: U1401701

Mr. Ryan Flynn, Secretary
New Mexico Environment Department
2905 Rodeo Park Drive, Building 1
Santa Fe, NM 87505-6303

Dear Mr. Flynn:

Subject: Response to Request for Information on Management of Waste at Los Alamos National Laboratory, EPA ID #NM890010515

The purpose of this letter is to provide a response to the information request received by letter from the New Mexico Environment Department (NMED) dated June 16, 2014. The U.S. Department of Energy (DOE) and the Los Alamos National Security, LLC (LANS), collectively the Permittees, provide the following responses to the request for information. The enclosures described below provide the information requested by the NMED.

Enclosure 1 includes a list of the current standard operating procedures used for packaging waste, for repacking waste, for absorbing liquids, and for neutralizing waste at Los Alamos National Laboratory (LANL) facilities, as well as copies of the procedures. Many of these are operating procedures for nuclear facilities that must undergo a classification review before they can be released outside the Laboratory. Those that have been approved for release are enclosed herewith. Seven additional procedures will be delivered to NMED as they are approved for release, which is proceeding as quickly as possible. Individual procedures are separated within the enclosure by title pages.

Enclosure 2 contains a list of LANL locations, by Technical Area (TA), Building and waste type, where hazardous waste, mixed waste, and non-hazardous transuranic and low-level radioactive waste has been generated at LANL post 1979. As was the case with some procedures, certain locations within nuclear facilities in secured LANL areas must undergo a classification review before the information can be released outside the Laboratory. This enclosure represents the most complete listing that can be created in the extremely compressed time frame associated with this request. LANL will continue to review its

ENCLOSURE 1

LANL Procedures for Packaging, Repackaging, Absorbing Liquids and Neutralizing Waste

WM-DO-14-048

Various LA-UR #s

Date: JUL 03 2014

LANL Procedures for Packaging, Repackaging, Absorbing Liquids and Neutralizing Waste

Area G Waste Processing Procedures

EP-AREAG-WO-DOP-1015, TA-54 Area G Pipe Overpack Container Operations(LA-UR-14-24896)

EP-AREAG-WO-DOP-1069, TA-54 Area G TRU SWB/Drum Operations (LA-UR-14-24895)

EP-AREAG-WO-DOP-1084, TA-54 Area G TRU WASTE Drum SSSR Activities (LA-UR-14-24894)

EP-AREAG-WO-DOP-1085, TA-54 Area G Sludge Remediation SSSR Activities (LA-UR-14-24893)

EP-AREAG-WO-DOP-1091, TA-54 Area G TRU Oversized Container SSSR Activities (LA-UR-14-24892)

EP-AREAG-WO-DOP-1155, TA-54 Area G TRU Corrugated Metal Box SSSR Activities (LA-UR-14-24891)

EP-AREAG-WO-DOP-1159, TA-54 Area G Ten-Drum Overpack Container Operations (LA-UR-14-24890)

EP-AREAG-WO-DOP-1161, TA-54 Area G TRU Waste Glovebag Operations (LA-UR-14-24889)

EP-AREAG-WO-DOP-1238, TA-54 Area G TRU Nitrate Salt Drum Sampling (LA-UR-14-24888)

EP-AREAG-WO-DOP-1245, TA-54 Area G Empty Nitrate Salt Parent Drum Sampling (LA-UR-14-24887)

Waste Characterization, Repackaging Facility (WCRRF) Procedures

EP-WCRR-WO-DOP-1103, WCRRF LLW Handling, Processing, Storage, and Shipment (LA-UR-14-24886)

EP-WCRR-WO-DOP-1196, WCG Horizontal Port Waste Removal (LA-UR-14-24885)

EP-WCRR-WO-DOP-1197, WCRRF Loading/Unloading SWB or Overpack Drum (LA-UR-14-24884)

EP-WCRR-WO-DOP-1198, WCRRF Waste Characterization Glovebox Operations (LA-UR-14-24883)

EP-WCRR-WO-DOP-1200, WCRRF SWB Preparation And Closure (LA-UR-14-24882)

EP-WCRR-WO-DOP-1204, WCRRF 55-Gallon Daughter Drum Assembly Preparation and Closure (LA-UR-14-24881)

TA-55 Procedures

FFS-DOP-002, Low Level Waste Operations at TA-55, R8.1 (LA-UR-14-24924)

PMT2-DOP-CF-001, R1 Preparing Drum Assemblies for Cement Fixation (LA-UR-14-24679)

PMT2-DOP-CF-002, R3 Drum-in/Drum-out Operations for Cement (LA-UR-14-24704)

PMT2-DOP-CF-003, R1 Certifying, Transferring and Storing Evaporator Bottoms for Cement Fixation (LA-UR-14-24634)
PMT2-DOP-CF-005, R1 Non-evaporator Solution Operations for Cement Fixation (LA-UR-14-24711)
PMT2-DOP-CF-006, R1 pH Adjustment of Evaporator Bottoms for Cement Fixation (LA-UR-14-24713)
PMT2-DOP-CF-007, R3 Cement Addition Operations for Cement Fixation (LA-UR-14-24625)
PMT2-DOP-CF-008, R4 Particulate Waste Certification and Cementation (LA-UR-14-24636)
PMT2-DOP-CF-009, R3 Inspection of Treatment, Storage, and Disposal Units for Cement Fixation and Tank Storage (LA-UR-14-24635)

WETF Procedures

WETF-WST-TP-01, Rev. A,Tritium Contaminated Waste Oil Disposal Operating Instruction (LA-UR-14-24961)
W-7-TP-0053U, Rev A, Absorption of Liquid Waste with Low-Level Tritium (LA-UR-14-24963)

EP-AREAG-WO-DOP-1015, TA-54 Area G Pipe Overpack Container Operations

LAUR-14-24896

TA-54 Area G Pipe Overpack Container Operations

Effective Date: 2/28/2014

Hazard Class:	☐	Low	☒	Moderate	☐	High/Complex
Usage Mode:	☐	Reference	☒	UET	☐	Both UET & Reference

The Responsible Manager has determined that the following organizations' review/concurrence is required for the initial document and for major revisions a same type and level review is required. Review documentation is contained in the Document History File:

- Engineering
- Quality Assurance
- Radiation Protection
- Industrial Hygiene and Safety
- Shift Operations Manager
- Packaging and Transportation
- Support-Services Subcontractor
- Subject-Matter Expert

Responsible Manager, LTP-DDP Operations Manager

Name (print)	Z#	Signature	Date
Lou Jalbert	121997	/s/ Randy Axtell for Lou Jalbert	2/21/14

Classification Review: ☐ N/A ☒ Unclassified ☐ UCNI ☐ Classified _____

Name (print)	Z#	Signature	Date
Teri Tingey	200975	/s/ Teri Tingey	2/21/14

Working Copy / Information Only (circle one)

Initials / Date: _____/_____

This document fully satisfies the requirements of Integrated Work Management in order to systematically describe the work activity, the associated hazards, and the controls that **MUST** be employed to mitigate the risks.

REVISION HISTORY

Document Number	Issue Date	Action	Description
EP-AREAG-WO-DOP-1015, R.0	May 17, 2013	New document	New Document.
EP-AREAG-WO-DOP-1015, R.1	September 30, 2013	Major Revision	Revise procedure to incorporate requirements of ABD-WFM-002 Rev 2.0 Technical Safety Requirements (TSRs) for Technical Area 54, Area G. No new hazards are introduced by this revision.
EP-AREAG-WO-DOP-1015, R.2	January 31, 2014	Major Revision	Revise procedure to implement revised P101-25. Added requirements to Section 3 regarding critical and ordinary lifts. Made editorial changes (e.g., updated references). No new hazards are introduced in this revision.
EP-AREAG-WO-DOP-1015, R.3	February 28, 2014	Major Revision	Revise procedure to implement Area G TSR Page Change R.2.3: added LCO 3.1.7 Note to Section 3 to document exemption of a POC from the LCO requirement. No new hazards are introduced in this revision.

TABLE OF CONTENTS

Section Page

TITLE PAGE 1
REVISION HISTORY 2
TABLE OF CONTENTS 3

1. PURPOSE 4

2. SCOPE 4

3. PRECAUTIONS AND LIMITATIONS 4

4. PREREQUISITE ACTIONS 7
4.1 Planning and Coordination 7
4.2 Materials and Equipment 8
4.2.1 Measurement and Test Equipment (M&TE) 8
4.2.2 Special Tools and Equipment 8
4.2.3 Consumables 9
4.3 Field Preparation 9

5. INSTRUCTIONS—PIPE OVERPACK CONTAINER PREPARATION 11

6. INSTRUCTIONS—PIPE OVERPACK CONTAINER CLOSURE 19

7. POST-PERFORMANCE ACTIVITIES 22
7.1 Disposition 22
7.2 Records Processing 23

8. REFERENCES 23

Appendices
Appendix 1, Pipe Overpack Assembly 24

Attachments
Attachment 1, TA-54 Area G POC Preparation Checklist 27
Attachment 2, TA-54 Area G POC Closure Checklist 29

1. PURPOSE

This procedure provides instructions for waste activities associated with Pipe Overpack Container (POC) operations at Technical Area 54.

2. SCOPE

This procedure applies to waste and support-services subcontractor personnel involved with POC operations within TA-54 Area G.

This procedure addresses the preparation and closing of a POC assembly. This procedure does not address the opening or loading of a POC assembly; these activities are addressed in individual waste handling procedures.

3. PRECAUTIONS AND LIMITATIONS

- To comply with the intent of the As Low As Reasonably Achievable (ALARA) program, all personnel **SHALL** apply the principles of time, distance, and shielding when working with or around radiological materials.

- At no time is any individual permitted to place any portion of their body under a suspended load.

- During high temperature and humidity days, while using respirators and impermeable or multilayered work clothing which limits air movement, or during high-physical exertion individuals must be aware of potential heat stress. It must be noted that poor physical condition, some medicines, and inadequate tolerance for hot workplaces may result in elevated potential to heat stress. In order to reduce the potential of heat stress the following activities should be practiced:
  - Allow sufficient time for proper acclimatization to heat
  - Increase fluid and electrolyte intake before, during, and after during work
  - Only drink in designated break areas during work hours
  - Use an industrial hygiene and safety approved work/rest regimen
  - Recognize the early symptoms of heat stress
  - Consider heat stress when selecting personal protective equipment

- Job-related heat stress varies due to environmental conditions, type of work, metabolic rate, and clothing requirements. When heat stress monitoring is conducted, supervision and the industrial hygiene and safety team **SHALL** assess heat stress hazards and recommend control measures as warranted.

3. PRECAUTIONS AND LIMITATIONS (continued)

- Avoid slips, trips, and falls by wearing the proper footwear with slip-resistant soles and using handrails when using stairs. Use established pathways when available and avoid walking on uneven or unstable surfaces.

- Activities, items, and containers **SHALL** satisfy approved design specification, regulatory requirements, process-specific parameters, and procedural requirements. Activities, items, or containers that do not conform to the approved specifications and requirements are considered nonconforming and Nonconformance Reports (NCRs) **SHALL** be generated in accordance with P330-6, Nonconformance Reporting, as required.

- When a worker observes an unsafe condition or act that may pose an imminent danger or other safety concern/hazard, the worker has the authority and responsibility to inform the worker engaged in the work and request that the work activity be paused and/or stopped based on the risk posed to the individual, the employees, the environment, or the facility in accordance with P101-18, Procedure for Pause/Stop Work.

- Hazardous waste containers with liquids (any amount or configuration) that have not been solidified (absorbed) **SHALL** be managed on secondary containment pallets.

- Not Applicable (N/A) is documented on the attachments during the performance of this procedure indicating information that is not required to be recorded.

- Do not disturb or touch wild animals, dead animals, nesting areas, droppings, or surfaces with mold growth to avoid exposure to biological threats (e.g., snakes, rodents, rodent droppings, Hanta virus, Bubonic plague, spiders, West Nile virus, molds).

- The most current list of Waste Isolation Pilot Plant (WIPP)-approved filtered vents are listed on DOE/WIPP 11-3384, CBFO Approved Filter Vents.

- This procedure contains special procedure step markings. **($)** is used to identify steps that implement TA-54 Area G Safety Basis requirements. Steps containing **($)** may not be changed without Engineering approval to ensure the safety envelope is maintained.

- Flammable gases and liquids **SHALL** not be stored in TRU WASTE Storage Areas. Flammable liquids required for operations **SHALL** be authorized in accordance with EP-AREAG-FO-AP-1097, TA-54 Area G Combustibles/Flammables Control.

3. PRECAUTIONS AND LIMITATIONS (continued)

- **($)** Vehicle drivers, forklift operators, and crane operators **SHALL** be trained/certified and maintain applicable LANL qualifications for equipment operations and be able to recognize specific job hazards and associated controls. [Administrative Control (AC) 5.9]

- **($)** A spotter **SHALL** be present for TRU waste container lifts planned to exceed 4 ft above the ground surface. If the planned lift will exceed 12 ft from the bottom of the container to the ground, a critical lift plan **SHALL** be used. [Specific Administrative Control (SAC) 5.7.8]

- All critical lift plans executed by Los Alamos National Laboratory (LANL) personnel **SHALL** be developed using Attachment B, LANL Critical Lift Plan, of P101-25, Cranes, Hoists, Lifting Devices, and Rigging Equipment.

- The instructions in this procedure satisfy the P101-25 ordinary lift requirements and the use of LANL Form 1611, Ordinary Lift Procedure, is <u>not</u> required. Not all of the items listed on Form 1611 are captured in this procedure because this procedure is performed using gantry cranes and forklifts in preapproved locations and lifts standard waste containers of a known size and volume.

- Forklift operations are governed by the LANL procedure P101-4, Forklift and Powered Industrial Trucks. P101-4 requires the completion of the applicable sections of a LANL procedure P101-25 Attachment B for critical lifts involving a forklift or powered industrial truck. Forklift operations <u>not</u> involving a critical lift (e.g., load suspended below the forks of the forklift) are <u>not</u> required to comply with the requirements of P101-25.

- Support Services Subcontractors executing this procedure **SHALL** comply with the safety and health requirements documented in contractual agreements with the LANL.

- Containers **SHALL** only be opened inside enclosures with HEPA-filtered ventilation overseen by a Radiological Control Technician (RCT). During the opening of containers, respirators **SHALL** be worn in accordance with RWP requirements and the removal of materials from containers **SHALL** be limited and controlled.

- **($)** The performance criteria of metal TRU WASTE CONTAINERS at the TA-54 Area G site **SHALL** meet the requirements of ABD-WFM-002, Technical Safety Requirements (TSRs) for Technical Area 54, Area G. [AC 5.6.11(2) and DF 6.2.1]

3. PRECAUTIONS AND LIMITATIONS (continued)

- **($)** Prior to loading waste into a POC, a verification **SHALL** be performed to confirm that the POC has been procured to meet WIPP standards. [In-Service Inspection (ISI) 6.1.2]

- Replacement of damaged POC assembly parts, other than the pipe component lid bolts, hoist rings and cap screws, filtered vents, and 55-gal drum closure ring is not allowed.

- **($)** LCO 3.1.7 is not applicable to 1) cemented and vitrified waste forms, 2) waste packaged in a POC, 3) during the temporary removal of a drum from a DOUBLEPACK during repackaging or characterization with a High Efficiency Neutron Counter (HENC) or other NDE/NDA device, and 4) SSSR activities. (LCO 3.1.7 Note)

4. PREREQUISITE ACTIONS

NOTE *The listed prerequisite actions may be completed in any order.*

4.1 Planning and Coordination

Supervisor or designee

[1] **ENSURE** that the current revision of this document is available, and **IDENTIFY** this document as Working Copy or Information Only on the Title Page.

[2] **ENSURE** that the performance of this activity is scheduled on the TA-54 Area G facility schedule.

[3] **ENSURE** that, as a minimum, the following personnel are available for performance of this procedure, as required:
- Two Radiological Control Technicians (RCTs)
- Two Waste Handling Technicians
- One qualified supervisor
- One spotter, as required

[4] **ENSURE** that a Radiological Work Permit (RWP) for the planned activity has been issued, as applicable.

[5] **ENSURE** that a pre-evolution briefing is conducted and documented for all personnel involved in the performance of this procedure, in accordance with EP-DIV-DOP-0112, EWMO Pre-Job Briefings, or other approved process.

4.1 Planning and Coordination (continued)

[6] **VERIFY** with the AREA G operations center that:

- ALL Defined Area(s) involved in this work are in OPERATION MODE.
- Area G is in Staffing Condition 1 (one), as defined in EP-DIV-AP-20059, Watchbill Administration.

4.2 Materials and Equipment

NOTE *The list of materials and equipment is not an all inclusive list and additional tools and equipment may be used as necessary.*

4.2.1 Measurement and Test Equipment (M&TE)

Waste Handling Operator

[1] **ENSURE** that the following measuring and test equipment are available, as required:

- Calibrated torque wrench capable of torqueing to 120 in-lb
- Calibrated torque wrench capable of torqueing to 75 ft-lb

[2] **IF** a M&TE calibration date has expired,
THEN:

[A] **TAG** the M&TE Out-of-Service.

[B] **NOTIFY** supervision for the applicable actions.

4.2.2 Special Tools and Equipment

Waste Handling Operator

[1] **ENSURE** that the following special tools and equipment are available, as required:

- Elephant trunks
- Flashlight
- 1-1/4 in. socket (6-in. pipe component closure bolts)
- 1-7/16 in. socket (12-in. pipe component closure bolts)
- Ratchet drive wrench
- Spill response kit

4.2.3 Consumables

NOTE *The most current list of Waste Isolation Pilot Plant (WIPP)-approved filtered vents are listed on DOE/WIPP 11-3384, CBFO Approved Filter Vents.*

Waste Handling Operator

[1] **ENSURE** that the following consumables are available, as required:

- Personnel Protective Equipment
- Cut-Resistant Gloves (e.g., leather gloves or HexArmor®)
- Nitrile gloves
- Cutting tool (e.g., utility knife)
- Decontamination supplies
- Thread-locker (e.g., Loctite® 271 or Loctite® 680)
- Thread sealant (e.g., Loctite® 246)
- WIPP-approved filtered vent (e.g., NucFil 019 or NucFil 019DS)
- Radioactive labels
- All-in-One labels
- Shorty labels
- Pipe Overpack Container (POC)
- Permanent marker

4.3 Field Preparation

Supervisor or designee

[1] **ENSURE** that the applicable inspection sheet is completed for the work locations in accordance with EP-AREAG-FO-DOP-1087, TA-54 Work Release Inspection Sheet.

4.3 Field Preparation (continued)

NOTE *A new POC that is being prepared for use in accordance with Section 5, Pipe Overpack Container Preparation, does not require the use of a contamination control enclosure for the preparation process.*

[2] **IF** the POC is **NOT** a new POC,
THEN:

[A] **ENSURE** that this activity is conducted in a contamination control enclosure, as required.

[B] **ENSURE** that the applicable round sheet has been completed (e.g., EP-AREAG-WO-DOP-1162, TA-54 Area G Dome 231 PermaCon Operator Round Sheet, EP-AREAG-WO-DOP-0220, TA-54 Area G Building 412 Containment Tent Operator Round Sheet, or EP-AREAG-WO-DOP-1061, TA-54 Area G Dome 375 PermaCon Operator Round Sheet), as required.

[3] **IF** performing this activity in a radiological contamination control tent,
THEN:

NOTE *In accordance with RP-1-DP-65, Radiological Containments, a containment tent that is in place for greater than 30 days* ***SHALL*** *be re-inspected by the Fire Protection Engineer at an interval not to exceed 45 days and* ***SHALL*** *be documented on the daily inspection checklist.*

[A] **ENSURE** that the initial contamination control enclosure approval has been completed in accordance with RP-1-DP-65, Radiological Containments, as required.

[B] **ENSURE** that the daily radiological containment inspection has been performed in accordance with RP-1-DP-65.

[C] **ENSURE** that activities outside of the radiological contamination control tent, such as forklift operations, have been minimized.

5. INSTRUCTIONS—PIPE OVERPACK CONTAINER PREPARATION

This section is a stand-alone section and may be performed independently of, or in conjunction with other Instruction sections.

NOTE 1 *Radiological surveys may be performed as determined necessary [e.g., by an RP representative (e.g., RCT)] any time during the performance of this procedure.*

NOTE 2 *The preparation of a new POC does not require that the activity be performed inside of a contamination control enclosure.*

NOTE 3 *Appendix 1, Pipe Overpack Assembly, provides an illustration of the individual items that make up a Pipe Overpack Assembly.*

Waste Handling Operator

[1] **ENSURE** that the applicable prerequisites are complete.

[2] **OBTAIN** a pre-assembled POC drum, and **RECORD** the POC serial number on each page of Attachment 1, TA-54 Area G POC Preparation Checklist.

[3] **($) VERIFY** the POC is procured to meet WIPP standards by comparing the serial number with the quality assurance (QA) documentation, and **CHECK** (√) SAT or UNSAT on Attachment 1. (ISI 6.1.2)

[4] **DETERMINE** whether the POC drum has a WIPP-approved filtered vent installed in the 55-gal drum lid, and **CHECK** (√) SAT or UNSAT on Attachment 1.

[5] **IF** the POC drum lid does **NOT** have a WIPP-approved filtered vent,
THEN:

[A] **ENSURE** that the 3/4-in. bung plug or the existing vent has been removed and discarded.

WARNING

Due to skin allergen hazard, nitrile, pylox, or trionic gloves SHALL be worn when applying Loctite®.

[B] **APPLY** Loctite® 271 or Loctite® 680 to the first three threads of a WIPP-approved filtered vent.

5. INSTRUCTIONS—PIPE OVERPACK CONTAINER PREPARATION (continued)

[C] **SCREW** the WIPP-approved filtered vent into the 3/4-in. bung hole.

[D] **ENSURE** that the torque wrenches to be used are calibrated,
AND DOCUMENT the following on Attachment 1:

- M&TE identification number
- Calibration expiration date
- Torque wrench range specified on the Calibration Certificate
- Tolerance (±)

[E] **CHECK** (√) YES or NO on Attachment 1 to indicate whether the torque value is within the calibrated range of the torque wrench.

[F] **IF** NO was checked (√) in the previous step,
THEN NOTIFY supervision that the torque value is <u>not</u> within the calibrated range of the torque wrench and **REQUEST** further direction.

[G] **TORQUE** the WIPP-approved filtered vent to a nominal value of 120 in-lb (96 in-lb to 144 in-lb), and **RECORD** the WIPP-approved filtered vent torque value on Attachment 1.

[H] **RECORD** the type of WIPP-approved filtered vent used on Attachment 1.

- Manufacture
- Model number
- Serial number
- Date of Manufacture

[I] **IF** the WIPP-approved filtered vent is **NOT** properly seated and there are signs of tears or degradation of the gasket,
THEN:

[a] **IDENTIFY** (e.g., tag, or mark) the WIPP-approved filtered vent indicating that it is defective.

[b] **SEGREGATE** the WIPP-approved filtered vent in order to prevent the item from being used.

[c] **NOTIFY** supervision of the discrepancy.

5. INSTRUCTIONS—PIPE OVERPACK CONTAINER PREPARATION (continued)

NOTE 1 *A Quality Assurance (QA) representative may be contacted for assistance with the NCR process.*

NOTE 2 *The NCR may be initiated at an operationally convenient time.*

Supervisor

[d] **ENSURE** that an NCR is initiated in accordance with P330-6, Nonconformance Reporting, as required.

Waste Handling Operator

[e] **OBTAIN** a new WIPP-approved filtered vent.

[f] **GO** to Step 5.[5][A].

[J] **IF** the POC drum WIPP-approved filtered vent **CANNOT** be torqued (e.g., threads stripped),
THEN:

[a] **IDENTIFY** (e.g., tag, or mark) the POC assembly indicating that it is defective.

[b] **SEGREGATE** the POC assembly in order to prevent the item from being used.

[c] **NOTIFY** supervision of the discrepancy.

NOTE 1 *A QA representative may be contacted for assistance with the NCR process.*

NOTE 2 *The NCR may be initiated at an operationally convenient time.*

Supervisor

[d] **ENSURE** that an NCR is initiated in accordance with P330-6, as required.

Waste Handling Operator

[e] **GO** to Step 5.[2].

5. INSTRUCTIONS—PIPE OVERPACK CONTAINER PREPARATION (continued)

[6] **REMOVE** the drum ring and lid from the 55-gal drum.

[7] **REMOVE** fiber packing lid.

[8] **DETERMINE** whether there is a WIPP-approved filtered vent in the POC pipe component lid, and **CHECK** (√) YES or NO on Attachment 1.

[9] **IF** a WIPP-approved filtered vent is **NOT** installed in the POC pipe component lid, **THEN:**

[A] **ENSURE** that the 3/4-in. bung plug or the existing vent has been removed and discarded.

WARNING

Due to skin allergen hazard, nitrile, pylox, or trionic gloves SHALL be worn when applying Loctite®.

[B] **APPLY** Loctite® 271 or Loctite® 680 to the first three threads of a WIPP-approved filtered vent.

[C] **SCREW** the WIPP-approved filtered vent into the 3/4-in. bung hole.

[D] **ENSURE** that the torque wrenches to be used are calibrated,
AND DOCUMENT the following on Attachment 1:
- M&TE identification number
- Calibration expiration date
- Torque wrench range specified on the Calibration Certificate
- Tolerance (±)

[E] **CHECK** (√) YES or NO on Attachment 1 to indicate whether the torque value is within the calibrated range of the torque wrench.

[F] **IF** NO was checked (√) in the previous step,
THEN NOTIFY supervision that the torque value is <u>not</u> within the calibrated range of the torque wrench and **REQUEST** further direction.

5. INSTRUCTIONS—PIPE OVERPACK CONTAINER PREPARATION (continued)

[G] **TORQUE** the WIPP-approved filtered vent to a nominal value of 120 in-lb (96 in-lb to 144 in-lb), and **RECORD** the WIPP-approved filtered vent torque value on Attachment 1.

[H] **RECORD** the type of WIPP-approved filtered vent used on Attachment 1.

- Manufacturer
- Model number
- Serial number
- Date of Manufacture

[I] **IF** the POC pipe component WIPP-approved filtered vent **CANNOT** be torqued (e.g., threads stripped),
OR the filtered vent is **NOT** properly seated and there are signs of tears or degradation of the gasket,
THEN:

[a] **IDENTIFY** (e.g., tag, or mark) the POC assembly indicating that it is defective.

[b] **SEGREGATE** the POC assembly in order to prevent the item from being used.

[c] **NOTIFY** supervision of the discrepancy.

NOTE 1 *A QA representative may be contacted for assistance with the NCR process.*

NOTE 2 *The NCR may be initiated at an operationally convenient time.*

Supervisor

[d] **ENSURE** that an NCR is initiated in accordance with P330-6, as required.

Waste Handling Operator

[e] **GO** to Step 5.[2].

[10] **REMOVE** the POC pipe component lid, and **DETERMINE** whether the serial numbers on the POC pipe component lid and POC pipe component welded assembly flange match, and **CHECK** (√) YES or NO on Attachment 1.

5. INSTRUCTIONS—PIPE OVERPACK CONTAINER PREPARATION (continued)

[11] **IF** the serial numbers on the pipe component lid and pipe component welded assembly flange do **NOT** match,
OR there are any deficiencies in the inspection results,
THEN:

[A] **STOP** work.

[B] **NOTIFY** supervision of the condition of the drum.

Supervisor

[C] **NOTIFY** the applicable Operations Manager or designee and the TA-54 Operations Center of the condition of the drum.

NOTE 1 *A QA representative may be contacted for assistance with the NCR process.*

NOTE 2 *The NCR may be initiated at an operationally convenient time.*

[D] **ENSURE** that an NCR is initiated in accordance with P330-6, as required.

Waste Handling Operator

[E] **DOCUMENT** the discrepancy in the Comments section of Attachment 1.

[F] **SEGREGATE** the POC.

[G] **PROCEED** as directed by supervision/applicable Operations Manager or designee/TA-54 Operations Center.

[H] **GO** to Step 5.[2].

[12] **DETERMINE** whether the fiber packing components and flange shims are present, and **CHECK** (√) YES or NO on Attachment 1.

[13] **DETERMINE** whether the container is in good condition, and **CHECK** (√) YES or NO on Attachment 1.

[14] **DETERMINE** whether the O-ring is in good condition, and **CHECK** (√) YES or NO on Attachment 1.

5. INSTRUCTIONS—PIPE OVERPACK CONTAINER PREPARATION (continued)

[15] **RECORD** the WIPP-approved filtered vent information for the POC pipe component and 55-gal drum on Attachment 1.

WARNING

To comply with the intent of As Low As Reasonably Achievable (ALARA), placement of the POC near the operation location SHALL be performed.

Waste Handling Operator

[16] **IF** the POC assembly is to be loaded,
THEN PLACE the POC assembly near the vicinity of the loading operation.

WARNING

Avoid placing any portion of the body between the POC pipe component lid and the body flange in order to prevent pinching during the movement of the POC pipe component lid.

[17] **LIFT** the POC pipe component lid and **CAREFULLY** align the POC pipe component lid over the pin holes, as necessary.

[18] **LOWER** the POC pipe component lid onto the POC pipe component O-ring and flange.

CAUTION

Use caution to minimize lateral movement of the lid across the mating flange face to avoid unseating the O-ring from the groove and pinching the bag.

[19] **WHEN** the POC pipe component lid is in contact with the O-ring and flange face,
THEN MINIMIZE any lateral movement of the POC pipe component lid across the mating flange face.

5. INSTRUCTIONS—PIPE OVERPACK CONTAINER PREPARATION (continued)

[20] **IF** the POC pipe component lid must be lifted any amount above the POC pipe component for any reason,
THEN:

[A] **REMOVE** the POC pipe component lid completely.

[B] **REPEAT** Steps 5.[17] through 5.[19].

[21] **INSERT** the bolts into all 12 POC pipe component lid bolt holes.

[22] **HAND-TIGHTEN** the 12 POC pipe component lid bolts as far as possible, or **USE** a low speed, low torque driver to facilitate initial installation of the 12 POC pipe component lid bolts.

[23] **PLACE** the fiberboard packing top (i.e., lid), matching the pipe bolt heads, hoist ring, and filter with the cutouts in the fiberboard top.

[24] **INSTALL** the plywood spacers on the top of the fiberboard liner top, as required, to achieve a 1/2 in. maximum gap between the top of the plywood spacer and the bottom of the rigid liner lid.

[25] **INSTALL** the rigid liner lid.

[26] **INSTALL** the POC drum lid and drum locking ring (closure ring lugs facing downward) on the POC drum.

[27] **HAND-TIGHTEN** the POC drum locking ring bolt.

[28] **TRANSFER** the POC to the designated location as directed by supervision.

6. INSTRUCTIONS—PIPE OVERPACK CONTAINER CLOSURE

This section is a stand-alone section and may be performed independently of, or in conjunction with other Instruction sections of this procedure.

NOTE *Radiological surveys may be performed as determined necessary [e.g., by an RP representative (e.g., RCT)] any time during the performance of this procedure.*

Waste Handling Operator

[1] **ENSURE** that the applicable prerequisites are complete.

[2] **DETERMINE** whether the POC is ready to be sealed, and **RECORD** the POC serial number on Attachment 2, TA-54 Area G POC Closure Checklist.

WARNING

Avoid placing any portion of the body between the POC pipe component lid and the body flange in order to prevent pinching during the movement of the POC pipe component lid.

[3] **LIFT** the POC pipe component lid and **CAREFULLY** align the POC pipe component lid over the pin holes, as necessary.

[4] **LOWER** the POC pipe component lid onto the POC pipe component O-ring and flange.

CAUTION

Use caution to minimize lateral movement of the lid across the mating flange face to avoid unseating the O-ring from the groove and pinching the bag.

[5] **WHEN** the POC pipe component lid is in contact with the O-ring and flange face, **THEN MINIMIZE** any lateral movement of the POC pipe component lid across the mating flange face.

6. INSTRUCTIONS—PIPE OVERPACK CONTAINER CLOSURE (continued)

[6] **IF** the POC pipe component lid must be lifted any amount above the POC pipe component for any reason,
THEN:

[A] **REMOVE** the POC pipe component lid completely.

[B] **REPEAT** Steps 6.[3] through 6.[5].

WARNING

Due to skin allergen hazard, nitrile, pylox, or trionic gloves SHALL be worn when applying Loctite®.

[7] **APPLY** Loctite® 246 or equivalent to the threads of the 12 POC pipe component lid bolts.

[8] **INSERT** the bolts into all 12 POC pipe component lid bolt holes.

[9] **HAND-TIGHTEN** the 12 POC pipe component lid bolts as far as possible,
or **USE** a low speed, low torque driver to facilitate initial installation of the 12 POC pipe component lid bolts.

[10] **ENSURE** that the torque wrenches to be used are calibrated, and **DOCUMENT** the following on Attachment 2:
- M&TE identification number
- Calibration expiration date
- Torque wrenches range specified on the Calibration Certificate
- Tolerance (+/-)

[11] **CHECK** (√) YES or NO on Attachment 2 to indicate whether the torque value is within the calibrated range of the torque wrench.

[12] **IF** NO was checked (√) in the previous step,
THEN NOTIFY supervision that the torque value is <u>not</u> within the calibrated range of the torque wrench and **REQUEST** further direction.

6. INSTRUCTIONS—PIPE OVERPACK CONTAINER CLOSURE (continued)

[13] **TORQUE** the pipe component bolts to the following nominal value using the applicable cross-pattern sequence as shown on Appendix 1 and **RECORD** the torque value on Attachment 2.

- 6 in. POC - 40 ft-lb (35 to 45 ft-lb)
- 12 in. POC - 65 ft-lb (60 to 70 ft-lb)

[14] **TORQUE** the pipe component bolts to the following nominal value using the number clockwise-pattern sequence as shown on Appendix 1, and **RECORD** the torque value on Attachment 2.

- 6 in. POC - 40 ft-lb (35 to 45 ft-lb)
- 12 in. POC - 65 ft-lb (60 to 70 ft-lb)

[15] **PLACE** the fiberboard packing top (i.e., lid), matching the pipe bolt heads, hoist ring, and filter with the cutouts in the fiberboard top, and **DOCUMENT** initials and Z number on Attachment 2.

[16] **INSTALL** the plywood spacers on the top of the fiberboard liner top, as required, to achieve a 1/2 in. maximum gap between the top of the plywood spacer and the bottom of the rigid liner lid, and **DOCUMENT** initials and Z number on Attachment 2.

[17] **INSTALL** the rigid liner lid, and **DOCUMENT** initials and Z number on Attachment 2.

[18] **MEASURE** the vertical distance between the bottom of the rigid liner lid and the plywood spacer upper surface through the ridgid liner lid vent hole.

[19] **DETERMINE** whether the distance between the bottom of the rigid liner lid and the plywood spacer upper surface is less than or equal to 1/2 in.

[20] **IF** the distance between the bottom of the rigid liner lid and the plywood spacer upper surface is **NOT** less than or equal to 1/2 in.,
THEN REMOVE the drum liner lid and **GO** to Step 6.[16].

[21] **DOCUMENT** initials and Z number on Attachment 2 to indicate that the distance between the bottom of the rigid liner lid and the plywood spacer upper surface is less than or equal to 1/2 in.

[22] **CLOSE** the POC drum in accordance with EP-AREAG-WO-DOP-1069, TA-54 Area G TRU SWB/Drum Operations, and **RETURN** to the following step.

[23] **TRANSFER** the POC to the designated location as directed by supervision.

7. POST-PERFORMANCE ACTIVITIES

7.1 Disposition

Waste Handling Operator

[1] **PRINT** name, **SIGN** and **DATE** the applicable attachments.

Supervisor or designee

[2] **REVIEW** the applicable attachments for accuracy and completeness.

[3] **IF** any deficiencies were identified,
THEN INITIATE actions to correct the deficiency [e.g., Facility Service Request (FSR) System], and **DOCUMENT** the actions taken (e.g., FSR Issue Number) in the Comments section of the applicable attachments.

[4] **PRINT** name, **SIGN** and **DATE** the applicable attachments.

NOTE 1 *Support-Services Subcontractors are not required to perform a Post-Job Review.*

NOTE 2 *Completing a Post-Job Review may be accomplished using the applicable P300 form or online (the preferred method since the institution has access to feedback and lessons learned* http://int.lanl.gov/safety/iwmc/ *[Click on the Submit IWD Part 4 Post-Job Review]).*

Supervisor or designee

[5] **IF** this procedure is categorized as a moderate or high/complex activity and any of the following occur:

- An activity was completed for the first time
- A request was made by anyone involved with the performance of this procedure to perform a post-job review
- An abnormal event occurred
- A revision to an existing procedure was issued and it has been determined by the procedure owner or designee that a Post-Job Review is required

THEN PERFORM a Post-Job Review in accordance with P300.

[6] **IF** the Post-Job Review identified any necessary changes to this procedure,
THEN INITIATE a revision to this procedure.

7.2 Records Processing

Supervisor or designee

[1] Disposition records in accordance with the following:

Record Identification	Record Type Determination	Protection/Storage Method	Processing Instructions
Attachment 1, TA-54 Area G POC Preparation Checklist Attachment 2, TA-54 Area G POC Closure Checklist	Quality Assurance (QA) Record	Supervision **SHALL** implement a reasonable level of protection to prevent loss and degradation. Records should be maintained in a one hour fire-rated metal file cabinet when not in use.	When the records are ready for final disposition, the record is transferred to Records Management in accordance with EP-DIR-AP-10003, Record Management Procedure For ADEP Employees.

8. REFERENCES

ABD-WFM-002, Technical Safety Requirements (TSRs) for Technical Area 54, Area G

EP-AREAG-WO-DOP-1162, TA-54 Area G Dome 231 PermaCon Operator Round Sheet

EP-AREAG-WO-DOP-0220, TA-54 Area G Building 412 Containment Tent Operator Round Sheet

EP-AREAG-FO-AP-1097, TA-54 Area G Combustibles/Flammables Control

EP-AREAG-WO-DOP-1061, TA-54 Area G Dome 375 PermaCon Operator Round Sheet

EP-AREAG-WO-DOP-1069, TA-54 Area G TRU SWB/Drum Operations

EP-DIV-DOP-0112, EWMO Pre-Job Briefings

EP-DIR-AP-10003, Record Management Procedure For ADEP Employees

P101-4, Forklift and Powered Industrial Trucks

P101-25, Cranes, Hoists, Lifting Devices, and Rigging Equipment

P330-6, Nonconformance Reporting

P101-18, Procedure for Pause/Stop Work

APPENDIX 1
Page 1 of 3

PIPE OVERPACK ASSEMBLY

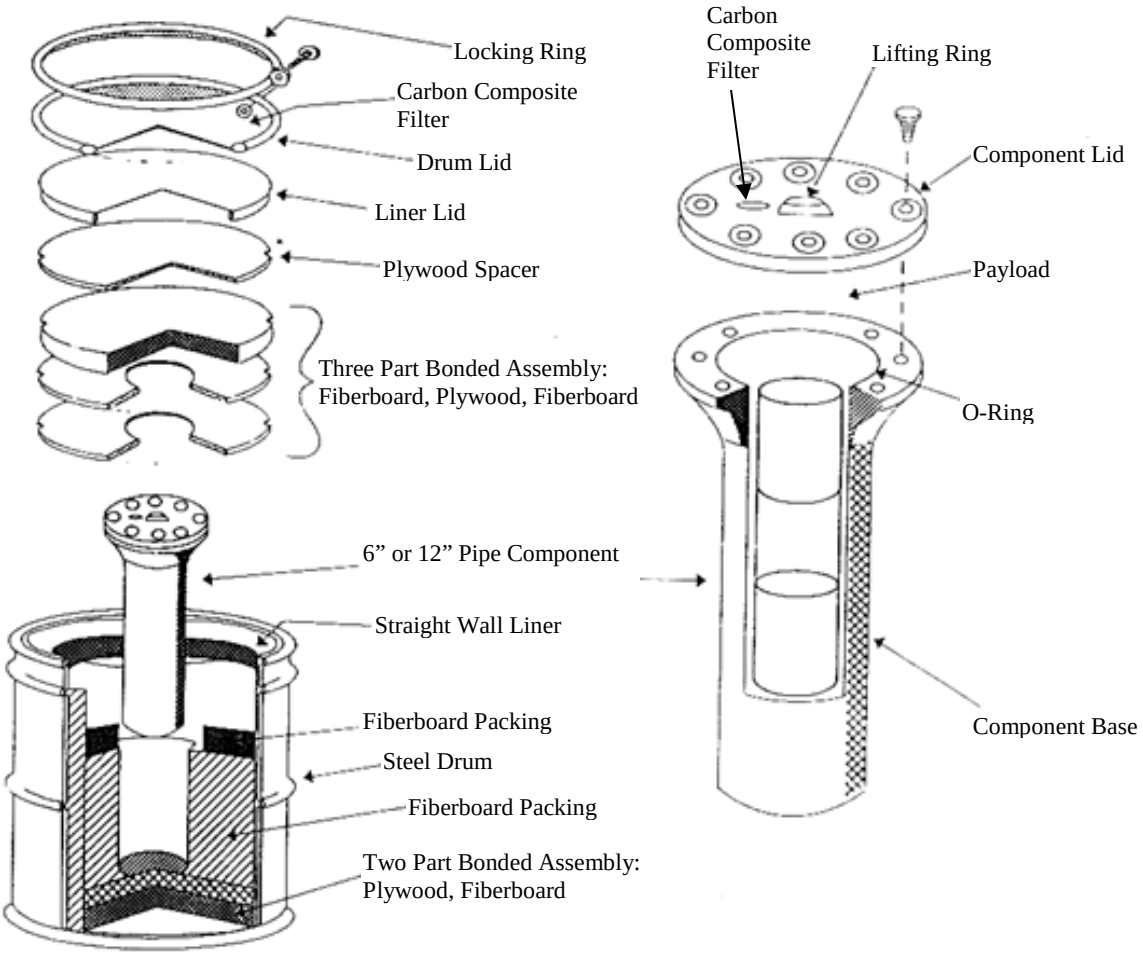

APPENDIX 1
Page 2 of 3

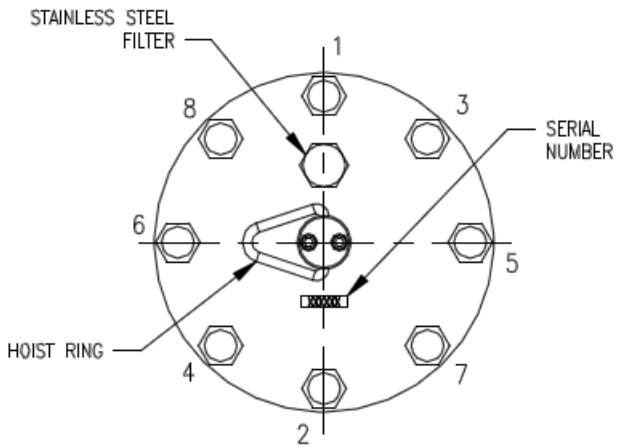

6 IN. PIPE
BOLT TORQUE SEQUENCE DIAGRAM
CROSS-PATTERN

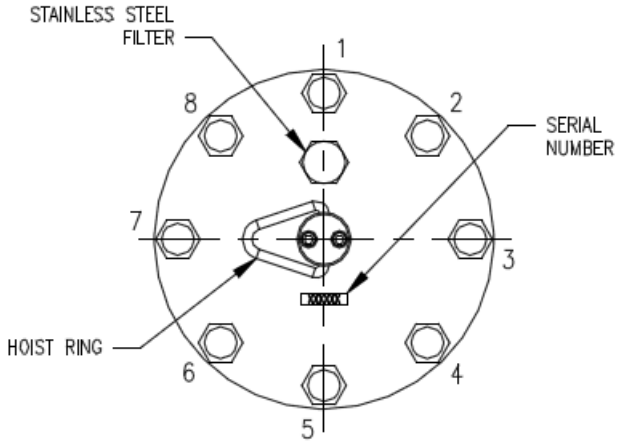

6 IN. PIPE
BOLT TORQUE SEQUENCE DIAGRAM
CLOCKWISE, BOLT TO BOLT

APPENDIX 1
Page 3 of 3

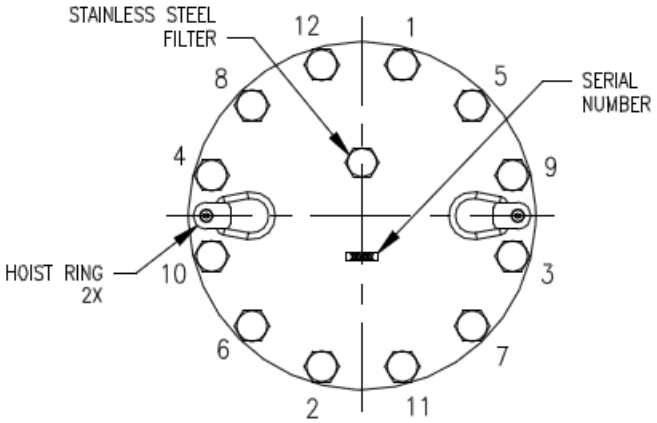

12 IN. PIPE
BOLT TORQUE SEQUENCE DIAGRAM
CROSS-PATTERN

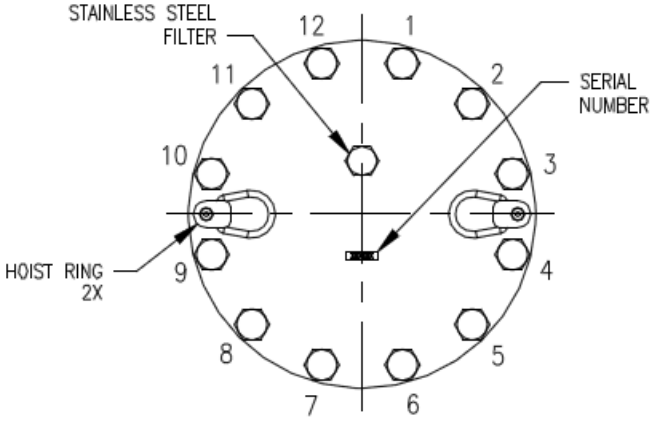

12 IN. PIPE
BOLT TORQUE SEQUENCE DIAGRAM
CLOCKWISE, BOLT TO BOLT

ATTACHMENT 1
Page 1 of 2

TA-54 AREA G POC PREPARATION CHECKLIST

5.[2] POC Serial No.: _____

5.[3] **($)** POC procured to meet WIPP criteria. (ISI 6.1.2) ☐ SAT ☐ UNSAT

5.[4] WIPP-approved filtered vent installed in POC drum lid. ☐ SAT ☐ UNSAT

5.[5][D] POC drum lid filtered vent torque wrench information: ☐ N/A
M&TE No: _____ Cal. Expiration Date: _____
Range in in-lb: _____ Tolerance: _____

5.[5][E] Torque value for each torque wrench within the calibrated range. ☐ YES ☐ NO ☐ N/A

5.[5][G] POC drum WIPP-approved filtered vent torque value
120 in-lb (96 to 144 in-lb) _____ in-lb ☐ N/A

5.[5][H] 55-gal drum WIPP-approved filtered vent information: ☐ N/A
Manufacturer: _____ Model No.: _____
Serial No.: _____ Manufacture Date: _____

5.[6] WIPP-approved filtered vent installed in POC pipe component lid. ☐ YES ☐ NO

5.[9][D] POC pipe component filtered vent torque wrench information: ☐ N/A
M&TE No: _____ Cal. Expiration Date: _____
Range in in-lb: _____ Tolerance: _____

5.[9][E] Torque value for each torque wrench within the calibrated range. ☐ YES ☐ NO ☐ N/A

ATTACHMENT 1
Page 2 of 2

5.[2] POC Serial No.: _____

5.[9][G] POC pipe component WIPP-approved filtered vent torque
120 in-lb (96 to 144 in-lb) _____ in-lb ☐ N/A

5.[9][H] POC pipe component WIPP-approved filtered vent information: ☐ N/A
Manufacturer: _____ Model No.: _____
Serial No.: _____ Manufacture Date: _____

5.[10] Serial number on the POC drum matches POC pipe component lid and POC pipe component welded assembly. ☐ YES ☐ NO

5.[12] Fiber packing and drum components and flange shims are present. ☐ YES ☐ NO

5.[13] POC is in good condition. ☐ YES ☐ NO

5.[14] O-ring in good condition. ☐ YES ☐ NO

5.[15] POC Pipe Component WIPP-approved filtered vent information:
Manufacturer: _____ Model No.: _____
Serial No.: _____ Manufacture Date: _____
55-gal Drum WIPP-approved filtered vent information:
Manufacturer: _____ Model No.: _____
Serial No.: _____ Manufacture Date: _____

Comments: _____

7.1[1] Performed By: _____ / _____ / _____ / _____
Operator (Print) Signature Z # Date

7.1[4] Reviewed By: _____ / _____ / _____ / _____
Supervisor/Designee (Print) Signature Z # Date/Time

ATTACHMENT 2
Page 1 of 1

TA-54 AREA G POC CLOSURE CHECKLIST

6.[2] POC Assembly Serial No.: _____

6.[10] Torque wrench information:
M&TE No.: _____ Cal. Due Date: _____
Range: _____ Tolerance: _____

6.[11] Torque value for each torque wrench within the calibrated range ☐ YES ☐ NO

6.[13] POC lid bolt cross-pattern sequence torque value: _____ ft-lb
- 6 in. POC - 40 ft-lb (35 to 45 ft-lb)
- 12 in. POC - 65 ft-lb (60 to 70 ft-lb)

6.[14] POC lid bolt clockwise-pattern sequence torque value: _____ ft-lb
- 6 in. POC - 40 ft-lb (35 to 45 ft-lb)
- 12 in. POC - 65 ft-lb (60 to 70 ft-lb)

6.[15] Fiberboard packing installed. _____ / _____
Initials Z #

6.[16] Plywood spacer installed. _____ / _____
Initials Z #

6.[17] Rigid liner lid installed. _____ / _____
Initials Z #

6.[21] Distance between bottom of rigid liner lid and plywood spacer upper surface ≤ 1/2 in. _____ / _____
Initials Z #

Comments: _____

7.1[1] Performed By: _____ / _____ / _____ / _____
Operator (Print) Signature Z # Date

7.1[4] Reviewed By: _____ / _____ / _____ / _____
Supervisor/Designee (Print) Signature Z # Date

EP-AREAG-WO-DOP-1069, TA-54 Area G TRU SWB/Drum Operations

LAUR-14-24895

Immediate Procedure Change (IPC) Cover

Section 1 – Originator Request

Document No.: EP-AREAG-WO-DOP-1069	Revision No.: 7	IPC No.: 1

Title: TA-54 Area G TRU SWB/Drum Operations

Description of need and requested action (Attach document mark-up and numbered additional sheets, if needed):

Revise procedure to correct SWB filter and pipe torque specifications in accordance with DOE/WIPP-11-3384, CBFO Approved Filter Vents, and WP 08-PT.01, Standard Waste Box Handling and Operations Manual. Make editorial corrections as necessary. This revision does not introduce any new hazards.

Originator Name (print):	Organization:	Z#:	Date:
Ron Smart	EWMO-PRO	200480	05/30/14

Section 2 –Reviews

Discipline:	Name:	Signature:	Date:
LTP-SSS SOM	Larry Salazar / Bob Harder	/s/ Bob Harder	06/01/14
LTP-DDP SOM / SME	Gen Fernandez	/s/ Gen Fernandez	06/03/14
QA	Robert Trujillo	/s/ Robert Trujillo	06/03/14
EnergySolutions OM	Leah Lavallee	/s/ Leah Lavallee	05/30/14
Engineering	Robert Griffis	/s/ Robert Griffis	06/02/14

USQ/USI Number: AREAG-14-315-D, R.0 ☐ N/A

Section 3– Final Approvals

FOD Concurrence:	Print Name and Title:	Z#:	Date:
/s/ Bob Harder	Bob Harder, TA-54 SOM	224938	06/01/14

☒ Permanent
☐ Limited Use

Effective Date: 06/26/14
Expiration Date: N/A

Comments:

Responsible Line Manager Signature:	Print Name and Title:	Z#:	Date:
	Gail Welsh, LTP-SSS OM	114849	6/25/14

TA-54 Area G
TRU SWB/Drum Operations

Effective Date: 05/22/14

Hazard Class:	☐	Low	☒	Moderate	☐	High/Complex
Usage Mode:	☐	Reference	☒	UET	☐	Both UET and Reference

The Responsible Manager has determined that the following organizations' review/concurrence is required for the initial document, and for major revisions a same type and level review is required. Review documentation is contained in the Document History File:

Criticality Safety
Engineering
Quality Assurance
Radiation Protection
Industrial Hygiene and Safety
Subject-Matter Expert
Environmental EAQ
Shift Operations Manager

Responsible Manager, LTP-SSS OM

Name (print)	Z#	Signature	Date
Gail Welsh	114849	/s/ Gail Welsh	05/22/14

Classification Review: ☐ N/A ☒ Unclassified ☐ UCNI ☐ Classified _____

Name (print)	Z#	Signature	Date
/s/ Art Crawford	080070	/s/ Art Crawford	05/21/14

Working Copy / Information Only (circle one)
Initials / Date: _____/_____

This document fully satisfies the requirements of P300, Integrated Work Management, in order to systematically describe the work activity, the associated hazards, and the controls that **MUST** be employed to mitigate the risks.

REVISION HISTORY

Document No./Revision No.	Issue Date	Action	Description
EP-AREAG-WO-DOP-0211, R.0	Approved for Training	New Document	Incorporates SWO-DOP-0106, IWD-6261, IWD-7204, IWD-7241, IWD-7282, IWD-7302, and IWD-6310. Supersedes the following documents: SWO-DOP-0106, EP-AREAG-WO-DOP-0203, EP-WCRR-WO-DOP-0240, P&T-SO-025, and EP-AREAG-WO-DOP-2107. Incorporated Formality of Operations requirements.
EP-AREAG-WO-DOP-0211, R.1	July 30, 2010	Major Revision	Revise procedure to reorganize the section and incorporate changes to make the actions consistent with other similar tasks performed within other WDP locations. Make editorial corrections as necessary such as updating references. This is a total rewrite and revision bars have been omitted. No new hazards are being introduced by this revision.
EP-AREAG-WO-DOP-0211, R.2	August 24, 2010	Major Revision	Revise the procedure to incorporate additional steps for handling transfer sleeve for containers destined to WCRRF. Updated Procedure template changes. No additional hazards were identified during this revision. Revision bars have been omitted.
EP-AREAG-WO-DOP-0211, R.3	August 25, 2010	Major Revision	Revise procedure to provide guidance for completing a TWSR Change Form, allow for previously inspected drum bags, incorporate process improvements for attaching a drum bag, and allow for the weighing of overpack drums. No additional hazards were identified during this revision.
EP-AREAG-WO-DOP-0211, R.4	August 26, 2010	Minor Revision	Revise procedure to incorporate editorial corrections such as correcting requested torque wrench information on attachments. This revision does not affect the original purpose, scope, or intent of the approved document. No additional hazards were identified during this revision.

REVISION HISTORY (continued)

Document No./Revision No.	Issue Date	Action	Description
EP-AREAG-WO-DOP-0211, R.5	September 14, 2010	Minor Revision	Revise procedure to add "appropriate rigging equipment" as an option when lifting SWBs. This revision does not affect the original purpose, scope, or intent of the approved document. No additional hazards were identified during this revision.
EP-AREAG-WO-DOP-0211, R.6	September 15, 2010	Minor Revision	Revise procedure to add "or package" when placing drums into and SWB. This revision does not affect the original purpose, scope, or intent of the approved document. No additional hazards were identified during this revision.
EP-AREAG-WO-DOP-0211, R.7	November 30, 2010	Major Revision	Revise procedure to allow the user to remove an overpack drum lid and replace the inner drum filtered vent. Add instructions to describe the actions necessary if the inner drum is not labeled or does not match the overpack container information. Make editorial corrections as necessary. This revision does not introduce any new activities or hazards.
EP-AREAG-WO-DOP-0211, R.8	February 11, 2011	Major Revision	Revise procedure to incorporate NFT-DVS Line Management Assessment comments (POST-47, and OBS-64) which includes removing the requirement for a designated person to inform workers of alarms. Make editorial corrections as necessary. This revision does not introduce any new hazards.
EP-AREAG-WO-DOP-0211, R.9	May 24, 2011	Major Revision	Revise procedure to incorporate Revision 0.26 to the Area G TSRs. Revise procedure to make the drum operations applicable to any drum (e.g. 55-gal, 85-gal, or 110-gal) rather than limiting the drum instructions to an overpack drum. Incorporate editorial corrections (e.g., change the title) as necessary. This revision does not introduce any new hazards.

REVISION HISTORY (continued)

Document No./Revision No.	Issue Date	Action	Description
EP-AREAG-WO-DOP-0211, R.10	July 19, 2011	Major Revision	Revise procedure to all for the reuse of SWBs and incorporate editorial corrections, as necessary. This revision does not introduce any new hazards.
EP-AREAG-WO-DOP-0211, R11	August 24, 2011	Minor Revision	Revise to remove note before Step 6.5[1]. No additional hazards were identified in this revision. Rev bars in the left column display changes to procedure.
EP-AREAG-WO-DOP-0211, R11 IPC-1	September 6, 2011	IPC-1	IPC-1 to revise to add step 5.3[5][b] and as required words to other steps in the procedure associated with removing the lid lift rigging and hoist ring “as required”. Also added precaution and limitation “N/A limitation”. No additional hazards were identified during this IPC-1. The changes are displayed in the left column using IPC-1 and bars.
EP-AREAG-WO-DOP-0211, R11, IPC-2	September 15, 2011	IPC-2	Revised procedure to remove the word overpack in steps 6.6[23][24] and Note before Step 5.3.[5][b]. No additional hazards were introduced during this IPC-2. Revised Step 5.5.40 to read the same as 6.6.24. Removed the action word “REMOVE” from Step 5.3[5][A] and added an additional step 5.3[5][c] Remove the item from the SWB. Rev bars in left column with IPC-2 label displaying changes to the procedure.
EP-AREAG-WO-DOP-0211, R12	September 26, 2011	Major Revision	Revise procedure to allow for directly loaded waste containers as waste material inside of an SWB. Make editorial corrections as necessary to provide flexibility within the procedure for supervision and radiation protection personnel to provide the proper guidance. This revision does not introduce any new hazards.

REVISION HISTORY (continued)

Document No./Revision No.	Issue Date	Action	Description
EP-AREAG-WO-DOP-0211, R13	October 24, 2011	Minor Revision	Make editorial corrections as necessary such as identifying the minimum staffing and provide guidance for the as left condition of a prepared waste container. This revision does not introduce any new hazards.
EP-AREAG-WO-DOP-0211, R.14	October 31, 2011	Minor Revision	Revised to update references to NCSLA. Added two Precautions and Limitations that provide guidance on the Pass-through Limits as listed on NCS-CSLA-11-163. Changed section 6.2 and 6.6 to UET. No hazards were identified during this revision. Rev bars in left column display location of changes to the procedure.
EP-AREAG-WO-DOP-0211, R.15	November 4, 2011	Minor	Revised procedure to update Section 6.2 to accommodate opening a Pipe Overpack container (POC). No additional hazards were identified during this revision. Rev bars in the left column display location of changes in the procedure.
EP-AREAG-WO-DOP-0211, R.16	11-10-2011	Minor	Revised to incorporate requirements for handling stripped SFHCSs in Section 5.2 Opening SWBs. Revised section 5.3 Step [6] to an “If applicable”. Added steps in Section 5.2 and 6.6 for handling POC spacers. No additional hazards were identified. Rev bars display the locations of the changes in the procedure.
EP-AREAG-WO-DOP-0211, R.17	November 22, 2011	Major Revision	Revised to modify RCT support and RWP requirements in Sections 4.1, 5.4, and 6.5. Modified steps in Section 5.5, SWB Closure (e.g., added new step [7][C]; transposed step [32] and [33], added a note, added new [33][N]). Added new note 2 in Section 6.6, Drum Closure, to allow recording data at an operationally convenient time. Made editorial corrections as needed. Corrected Usage Mode to UET on cover to reflect the UET designation of entire procedure made in previous revision. No additional hazards were identified. Revision bars display the locations of the changes in the procedure.

REVISION HISTORY (continued)

Document No./Revision No.	Issue Date	Action	Description
EP-AREAG-WO-DOP-0211, R.18	April 25, 2012	Major Revision	No additional hazards were identified. Revision bars display the locations of the changes in the procedure. Deleting references to Minimum Staffing required by SAC 5.2.3 in steps throughout procedure. This will be covered in Pre-Job Briefing procedure EP-DIV-AP-0112 Changed rivet to rivnut throughout procedure.
EP-AREAG-WO-DOP-0211, R.19	May 18, 2012	Major Revision	Revise procedure to allow for the use of a lifting device other than a forklift when loading/unloading an SWB. Update the instructions for replacing a rivnut®. Make editorial corrections as necessary such as changing AC 5.6.10 to SAC 5.6.10.1) and adding informational notes to remove all of an SWB gasket. When unloading an SWB of drums allow for the removal of all appropriately identified internal drums.
EP-AREAG-WO-DOP-0211, R.20	July27, 2012	Major Revision	Revise procedure to allow flexibility as to when a rivnut® is replaced such as not replacing a stripped rivnut® until closing an SWB. Modify the procedure to allow for the handling of unvented TRU waste containers and for labeling discrepancies between inner waste containers and overpack waste containers (e.g., missing labels). Make editorial corrections as necessary. This revision does not introduce any new hazards.
EP-AREAG-WO-DOP-0211, R. 20 IPC-1	August 20, 2012	IPC-1	Revised to incorporate Step 6.6[5] to allow to place a short filter in the overpack container that will be used for TRU Waste. Updated numbering. No additional hazards were identified during this revision. Rev bars in the left column display the locations of the IPC-1.
EP-AREAG-WO-DOP-0211, R. 20 IPC-2	September 28, 2012	IPC-1	Revised to add word Hazardous to the following statement in the Precautions and Limitations Section, Waste containers with liquids (any amount or configuration) that have <u>not</u> been solidified (absorbed) SHALL be managed on secondary containment pallets.

REVISION HISTORY (continued)

Document No./Revision No.	Issue Date	Action	Description
EP-AREAG-WO-DOP-0211, R. 21	October 23, 2012	Major Revision	Revise procedure to allow for waste containers with an open vent hole (such as a bung or plug removed) to be considered vented. Incorporate Area G TSR Page Change 0.32. Make editorial corrections as necessary. Document reason for overpacking (PFITS 2011-1134 Action 4). This revision does not introduce any new hazards.
EP-AREAG-WO-DOP-0211, R. 22	November 7, 2012	Major Revision	Revise procedure to remove last paragraph of the Scope section as Step 5.3[5] was specifically added to allow the removal of items that were direct loaded into an SWB. This revision does not introduce any new hazards.
EP-AREAG-WO-DOP-0211, R. 23	December 14, 2012	Major Revision	Revise procedure to incorporate requirement changes associated with the Area G TSR Page Change 0.33. This revision does not introduce any new hazards.
EP-AREAG-WO-DOP-0211, R. 24	March 7, 2013	Major Revision	Revise procedure to allow for the replacement of filtered vents before removing a drum lid rather than limiting the replacement during the closing process. Make editorial corrections as necessary. This revision does not introduce any new hazards.
EP-AREAG-WO-DOP-0211, R. 25	August 8, 2013	Major Revision	Revised procedure to add steps for handling overpack drums that contain inner drums that are wrapped with plastic and tape from WCRRF. Remover RCT steps. No additional hazards were introduced during this revision. Rev bar in left column display change locations.
EP-AREAG-WO-DOP-0211, R. 26	August 27, 2013	Major Revision	Revise procedure to incorporate steps for the implementation of WCATS. Make editorial corrections as necessary. This revision does not introduce any new hazards.

REVISION HISTORY (continued)

Document No./Revision No.	Issue Date	Action	Description
EP-AREAG-WO-DOP-1069, R.0	September 30, 2013	Major Revision	Revise procedure to incorporate requirements of ABD-WFM-002 Rev 2.0 Technical Safety Requirements (TSRs) for Technical Area 54, Area G. No new hazards are introduced by this revision. Document number changed; therefore, revision number reverted to zero. Revisions captured under EP-AREAG-WO-DOP-0211, R. 24 and R.25 are not captured under this revision.
EP-AREAG-WO-DOP-1069, R.1	October 28, 2013	Major Revision	Revise procedure to reconcile the Area G BIO 2.0 implemented version of the procedure with the changes made to EP-AREAG-WO-DOP-0211 during the development of the Area G BIO 2.0 version of the procedure. This revision does not introduce any new hazards.
EP-AREAG-WO-DOP-1069, R.2	November 19, 2013	Major Revision	Revise procedure to allow the continued processing a an overpacked waste container if the overpacked waste container does not have any markings that would indicate that it was not the expected container. This revision does not introduce any new hazards.
EP-AREAG-WO-DOP-1069, R.3	November 19, 2013	Major Revision	Revise procedure to provide instructions for performing a DOUBLEPACK inspection. Update CSLA reference to NCS-CSLA-13-064. Make editorial corrections as necessary. This revision does not introduce any new hazards.
EP-AREAG-WO-DOP-1069, R.4	January 28, 2014	Major Revision	Revise procedure to provide instructions for documenting a DOUBLEPACK inspection in WCATS. Revise procedures to incorporate the requirements of P101-25 Revision 2. Make editorial corrections as necessary. This revision does not introduce any new hazards.

REVISION HISTORY (continued)

Document No./Revision No.	Issue Date	Action	Description
EP-AREAG-WO-DOP-1069, R.5	February 28, 2014	Major Revision	Revise procedure for Area G TSR 2.3 implementation: modify definition of MINOR MOVEMENT; modify exclusion note to LCO 3.1.7; add inspection and use of lid restraints for unvented drum handling with new steps in Sections 5.3, 5.4, 6.3, and 6.5; added new Attachment 9 to document lid restraint inspections. Make editorial corrections as necessary. This revision is a total rewrite and revision bars have been omitted. This revision does not introduce any new hazards.
EP-AREAG-WO-DOP-1069, R.5 IPC-1	April 2, 2014	IPC	Revise procedure to change the requirement for opening used waste containers from being performed in a contamination control enclosure to either a contamination control enclosure or using RP approved controls. This revision does not introduce any new hazards.
EP-AREAG-WO-DOP-1069, R.6	April 14, 2014	Major Revision	Revise procedure to incorporate 200 PE-Ci DOUBLEPACK exemptions into the instruction steps. Delete Step 4.1[6], step is a duplicate to Steps 5.2[3] and 6.2[4]. Make editorial corrections as necessary. This revision does not introduce any new hazards.
EP-AREAG-WO-DOP-1069, R.7	May 22, 2014	Minor Revision	Revise procedure to allow for the installation of more than two WIPP-approved filtered vents. Make editorial corrections as necessary. This revision does not introduce any new hazards.
EP-AREAG-WO-DOP-1069, R.7 IPC-1	June 26, 2014	IPC	Revise procedure to correct SWB filter and pipe torque specifications in accordance with DOE/WIPP-11-3384, CBFO Approved Filter Vents, and WP 08-PT.01, Standard Waste Box Handling and Operations Manual. Make editorial corrections as necessary. This revision does not introduce any new hazards.

TABLE OF CONTENTS

Section Page

TITLE PAGE 1
REVISION HISTORY 2
TABLE OF CONTENTS 10

1. PURPOSE 12

2. SCOPE 12

3. PRECAUTIONS AND LIMITATIONS 13

3. PRECAUTIONS AND LIMITATIONS 14

4. PREREQUISITE ACTIONS 19
4.1 Planning and Coordination 19
4.2 Special Tools and Equipment, Parts, and Supplies 20
4.2.1 Measuring and Test Equipment (M&TE) 20
4.2.2 Special Tools and Equipment 21
4.2.3 Consumables 22
4.3 Field Preparation 23

5. PERFORMANCE—STANDARD WASTE BOX (SWB) OPERATIONS 25
5.1 SWB Preparation 25
5.2 Opening SWBs 35
5.3 Unloading SWBs 41
5.4 Loading SWBs 49
5.5 SWB Closure 55

6. PERFORMANCE—DRUM (55-, 85-, OR 110-GAL) OPERATIONS 67
6.1 Drum Preparation 67
6.2 Opening Overpack Drums (e.g., Pipe Overpack Container (POC), 85- or 110-gal) 72
6.3 Unloading Overpack Drums (e.g., 85- or 110-gal) 80
6.4 Waste Container Rust Inhibitor Removal 94
6.5 Loading Overpack Drums 97
6.6 Drum Closure 100

7. INSTRUCTIONS—DOUBLEPACK INSPECTION 107

8. POST-PERFORMANCE ACTIVITY 111
8.1 Disposition 111
8.2 Records Processing 112

9. REFERENCES 113

TABLE OF CONTENTS (continued)

Section Page

Appendices
Appendix 1, Definitions 114
Appendix 2, Standard Waste Box Closure Socket Flat Head Cap Screw Installation Pattern 115
Appendix 3, Nuclear Filter Technology Filtered Vent Seals 116

Attachments
Attachment 1, TA-54 Area G Standard Waste Box (SWB) Preparation Data Sheet 117
Attachment 2, TA-54 Area G Standard Waste Box (SWB) Loading Data Sheet 118
Attachment 3, TA-54 Area G Standard Waste Box (SWB) Closure Data Sheet 119
Attachment 4, TA-54 Area G Drum Preparation Data Sheet 120
Attachment 5, TA-54 Area G Unloaded 55-gal Drum Contamination/Radiation Data Sheet 121
Attachment 6, TA-54 Area G Drum Closure Data Sheet 122
Attachment 7, TA-54 Area G Overpack Waste Container Labeling Discrepancy Data Sheet 123
Attachment 8, TA-54 Area G Doublepack Inspection Data Sheet 124
Attachment 9 TA-54 Area G Drum Lid Restraint Inspection Data Sheet 126

1. PURPOSE

This procedure provides instructions for the activities associated with standard waste boxes (SWBs) and drums such as preparation, opening, and closing. This procedure also addresses overpacking of drums into certified overpack drums or SWBs, and the overpack of TRU waste containers exhibiting leaks, significant corrosion, or significant damage. [Administrative Control (AC) 5.6.11(1) and AC 5.6.11(2)]

2. SCOPE

This procedure applies to all personnel that supervise or perform overpack activities in TA-54 Area G.

This procedure addresses the following activities:

- Preparing Drums
- Loading/Unloading Overpack Drums
- Removing Rust Inhibitor
- Closing Drums
- Preparing SWBs
- Loading/Unloading SWBs
- Opening/Closing SWBs
- DOUBLEPACK Inspection

OVERPACK drums within an SWB may contain a degraded or loss of integrity waste container.

This procedure is used to intentionally move UNVENTED TRU WASTE DRUMS from one SWB (OVERPACK) to another SWB and to OVERPACK a newly discovered UNVENTED TRU WASTE DRUM into an SWB (OVERPACK) in conjunction with EP-AREAG-WO-DOP-1070, TA-54 Area G Unvented TRU Waste Container Handling and Storage. This procedure does <u>not</u> specifically address packaging OVERPACK containers for shipment to Waste Isolation Pilot Plant (WIPP) nor does this procedure address packaging an UNVENTED TRU WASTE DRUM into an OVERPACK drum or removing an UNVENTED TRU WASTE DRUM from an OVERPACK drum.

3. PRECAUTIONS AND LIMITATIONS

This procedure is performed in conjunction with the Waste Compliance and Tracking System (WCATS) desktop application, in order to overpack a single waste drum (e.g., 55-gal drum) into an overpack drum (e.g., 85-gal drum) or to overpack (consolidate) multiple drums (e.g., four 55-gal drums) into an SWB.

- Handling of TRU Waste Containers using industrial forklifts or cranes present several hazards; including container breech, dropped containers, obstructed areas, inclines, uneven surfaces, and pedestrians. Operators **SHALL** comply with the safe operating practices for use of powered industrial trucks and safety basis requirements for the safe handling of TRU waste containers. Adhere to the requirements of EP-DIV-DOP-20086, EWMO Division Specific Forklift and Drum Handler Equipment Operations.

- All critical lift plans executed by Los Alamos National Laboratory (LANL) personnel **SHALL** be developed using Attachment B, LANL Critical Lift Plan, of P101-25, Cranes, Hoists, Lifting Devices, and Rigging Equipment.

- The instructions in this procedure satisfy the P101-25 ordinary lift requirements and the use of LANL Form 1611, Ordinary Lift Procedure, is <u>not</u> required. Not all of the items listed on Form 1611 are captured in this procedure because this procedure is performed using gantry cranes and forklifts in preapproved locations and lifts standard waste containers of a known size and volume.

- Forklift operations are governed by the LANL procedure P101-4, Forklift and Powered Industrial Trucks. P101-4 requires the completion of the applicable sections of a LANL procedure P101-25 Attachment B for critical lifts involving a forklift or powered industrial truck. Forklift operations <u>not</u> involving a critical lift (e.g., load suspended below the forks of the forklift) are <u>not</u> required to comply with the requirements of P101-25.

- Support Services Subcontractors executing this procedure **SHALL** comply with the safety and health requirements documented in contractual agreements with the LANL.

- When a worker observes an unsafe condition or act that may pose an imminent danger or other safety concern/hazard, the worker has the authority and responsibility to inform the worker engaged in the work and request that the work activity be paused and/or stopped based on the risk posed to the individual, the employees, the environment, or the facility in accordance with P101-18, Procedure for Pause/Stop Work.

3. PRECAUTIONS AND LIMITATIONS

- Activities, items, and containers **SHALL** satisfy approved design specifications, regulatory requirements, process-specific parameters, and procedural requirements. Activities, items, or containers that do not conform to the approved specifications and requirements are considered nonconforming and Nonconformance Reports (NCRs) **SHALL** be generated in accordance with P330-6, Nonconformance Reporting, as required.

- Forklift operators must exercise extreme caution to ensure personnel are away from the immediate vicinity of forklift operations, and utilize spotters for all high lifts to prevent injury to personnel, equipment and material damage from industrial equipment use and falling objects.

- When using a pry bar to move containers in order to allow access, ensure that the pry bar is securely positioned (e.g., wedged) and that both feet are firmly placed on a non-slip surface to prevent personnel injury due to the sudden movement of the pry bar or loss of footage.

- Do not disturb or touch wild animals, dead animals, nesting areas, droppings, or surfaces with mold growth to avoid exposure to biological threats (e.g., snakes, rodents, rodent droppings, Hanta virus, Bubonic plague, spiders, West Nile virus, molds) and notify the TA-54 Operations Center of the situation.

- To comply with the intent of the ALARA Program, all personnel **SHALL** apply the principles of time, distance, and shielding when working with radiological materials.

- Comply with all building access requirements, including those established by the Radiological Control Technicians (RCTs) [e.g., requirements in Radiological Work Permits (RWPs)] and the health safety plan.

- Only trained and qualified personnel may cross the “cone of safety” demarcation while a load is suspended.

- Waste containers **SHALL** only be removed from an OVERPACK in a certified contamination control enclosure.

- Personnel **SHALL** use the appropriate drum handling equipment when moving drums or when removing or applying drum closure rings.

3. PRECAUTIONS AND LIMITATIONS (continued)

- Any manual movements of 55-gal and larger drums, whether empty or containing waste, without mechanical assistance, **SHALL** only be performed as a last resort and with written (e.g., email or memorandum) approval from one of the following individuals in accordance with EP-DIV-POLICY-20057, EWMO Health and Safety Policy – Manual Movement:
  - Program Director or Deputy
  - EWMO-FOD or Deputy
  - Project Manager

  Written approval **SHALL** contain a description of the activity to be performed and the non-mechanically assisted method approved to be used. A copy of the written approval **SHALL** be maintained.

- OVERPACK drums **SHALL** not be moved out from under a suspended load using a foot or hand. A tool is to be used to move OVERPACK drums out from under a suspended load.

- Avoid slips, trips, and falls by wearing the proper footwear with slip-resistant soles and using handrails when using stairs. Use established pathways when available and avoid walking on uneven or unstable surfaces.

- Drums and associated equipment (i.e., closure rings, fasteners, etc.) can have sharp or rough edges. Wear appropriate PPE when handling drums and OVERPACKS. Keep fingers and hands clear of pinch points during drum movements.

- Personal Protective Equipment (PPE) **SHALL** be worn when performing opening, sealing, or overpacking operations, in accordance with applicable procedures, RWPs, and specific facility requirements.

- High temperature and humidity; use of respirators and impermeable or multilayered work clothing; limited air movement; physical exertion; poor physical condition; some medications; and inadequate tolerance for hot workplaces may result in heat stress. In order to reduce the potential of heat stress the following activities should be practiced:
  - Allow sufficient time for proper acclimatization to heat
  - Increase fluid and electrolyte intake before and after work
  - Use an Environment, Safety, and Health (ES&H) approved work/rest regimen
  - Recognize the early symptoms of heat stress
  - Consider heat stress when selecting personal protective equipment
  - Utilize a Wet Bulb Globe Temperature (WBGT) when deemed necessary by IHS staff

3. PRECAUTIONS AND LIMITATIONS (continued)

- Hazardous waste containers with liquids (any amount or configuration) that have not been solidified (absorbed) **SHALL** be managed on secondary containment pallets.

- The most current list of WIPP-approved filtered vents are listed on DOE/WIPP 11-3384, CBFO Approved Filter Vents.

- Not Applicable (N/A) is documented on the attachments during the performance of this procedure indicating information that is not required to be recorded.

CS

- **(*)** Any single pallet of material may be driven within the 10 ft restriction of any item or array of items, but multiple pallets are not allowed. (NCS-CSLA-13-064)

CS

- **(*)** The 10 ft restriction between High-FGE and Low-FGE drums is not required while loading SWBs. One SWB should be loaded at a time. (NCS-CSLA-13-064)

- Personnel can determine the drum manufacturer (e.g., Myers or Skolnik) by the UN marking. The following are two examples of UN markings and the explanation of the markings:
  - Myers 1A2/X430/S/09/USA/M020 or MXXX
  - Skolnik 1A2/Y1.5/175/09/USA/SDCC

  1. *1A2 – 1 indicates it is a drum, A is a steel drum, and 2 means it has an open top (lid)*
  2. *X430 – X indicates the drum is designed to contain any hazard level material (Packaging Group I, II, or III) up to and including high hazard level material and the 430 indicates maximum gross weight in kilograms (430 Kg = 946 lb) [Y indicates up to and including medium hazard level material and 1.5 indicates the packaged material density or specific gravity]*
  3. *S – Drum contents is a solid or there is an inner package (175 is the hydraulic pressure in kilo-pascal)*
  4. *09 – Year manufactured*
  5. *USA – country where manufactured*
  6. *MXXX or SDCC – Manufacturer's code [Skolnik is SDCC and Myers will begin with an M (e.g., M020)]*

- This procedure contains special procedure step markings. **($)** is used to identify steps that implement TA-54 Area G Safety Basis requirements. Steps containing **($)** may not be changed without Engineering approval to ensure the safety envelope is maintained.

3. PRECAUTIONS AND LIMITATIONS (continued)

- Those steps of the procedure that are the direct implementation of a criticality safety administrative requirement are identified by a circle-CS symbol (CS) to the left of the step.

- **($)** Job-specific and site-specific training is established, implemented, and maintained in accordance with LANL requirements (P781-1, Conduct of Training Manual, or successor document). Personnel **SHALL** maintain applicable qualifications for vehicle and equipment operations and be trained to recognize specific job hazards and their associated controls. (AC 5.9)

- **($)** A spotter **SHALL** be present for TRU WASTE container lifts planned to exceed 4 ft above the ground surface. If the planned lift will exceed 12 ft from the bottom of the container to the ground, a critical lift plan **SHALL** be used. [Specific Administrative Control (SAC) 5.7.8]

- **($)** The performance criteria of METAL TRU WASTE CONTAINERS at the TA-54 Area G site **SHALL** satisfy the requirements of ABD-WFM-002, Technical Safety Requirements (TSRs) for Technical Area (TA)-54, Area G. [AC 5.6.11(2a) and DF 6.2.1]

- **($)** TRU METAL CONTAINERS stored on a pallet **SHALL** be stored on noncombustible pallets (e.g., metal pallets). [AC 5.6.4(2)]

- **($)** DOUBLEPACK is to place a TRU WASTE container inside another TRU WASTE container where both containers are of sound integrity. (TSR 1.1)

- **($)** OVERPACK is to place a TRU WASTE container inside another, larger passively vented METAL CONTAINER, to provide an additional barrier between the radiological waste and the environment. (TSR 1.1)

- **($)** TRU WASTE drums in degraded, suspect degraded, or damaged condition **SHALL** be overpacked. [AC 5.6.11(1)]

- **($)** UNVENTED TRU WASTE DRUMs that are above-ground **SHALL** be located in an access restricted ISOLATION AREA and <u>not</u> stacked. This LCO is <u>not</u> applicable to RETRIEVAL AREAS and Drum Venting process areas. [Limiting Condition for Operation (LCO) 3.4.1]

3. PRECAUTIONS AND LIMITATIONS (continued)

- **($)** Above-ground TRU WASTE drums with greater than or equal to 200 PE-Ci **SHALL** be DOUBLEPACKED, excluding RETRIEVAL AREAS. This LCO is not applicable to 1) cemented and vitrified waste forms, 2) waste packaged in a Pipe Overpack Container (POC), 3) during the temporary removal of a drum from a DOUBLEPACK during repackaging or characterization with a High Efficiency Neutron Counter (HENC) or other NDE/NDA device, and 4) SSSR activities. (LCO 3.1.7)

- Clamshell dome doors **SHALL** be closed and secured during high wind conditions.

- **($)** MINOR MOVEMENT is defined in ABD-WFM-002 as the HANDLING of an UNVENTED TRU WASTE DRUM to the extent necessary for attachment or removal of a lid restraining device or other blast-mitigation device. (TSR 1.1)

- **($)** With the exception of MINOR MOVEMENTs, a lid restraining device **SHALL** be installed when HANDLING UNVENTED TRU WASTE DRUMs. UNVENTED TRU WASTE DRUMs being TRANSPORTED **SHALL** have a lid restraining device and one of the following**:** (LCO 3.4.2)
  - Have a shielding/engineered barrier between the UNVENTED TRU WASTE DRUM and the worker
  - Maintain safe standoff distance of greater than or equal to 30 ft between the UNVENTED TRU WASTE DRUM and the worker

- Radiological surveys for personnel and equipment may be performed at any time during the performance of this procedure as deemed necessary by Radiation Protection (RP).

- The Class 2 laser scanning head on the WCATS mobile device can cause eye injury if eye is exposed to the beam. Do not allow eyes of user or observers to become exposed to laser beam.

- The WCATS mobile device contains a lithium-ion battery. Exposure to extreme temperatures (greater than 140 °F) may cause battery to explode. Do not store the WCATS mobile device where temperatures may exceed 140 °F. Keep mobile device out of direct sunlight for extended periods of time when not in use. Do not incinerate, mutilate, short circuit, or disassemble the battery pack. Do not dispose of in municipal waste receptacles. Dispose of in properly marked universal waste disposal areas.

3. PRECAUTIONS AND LIMITATIONS (continued)

- If the entire WCATS should become inoperable, before performing MAR related activity the operator notifies their immediate supervisor and contacts the Operations Center for guidance and direction.

- WCATS mobile device applications may be performed on the WCATS desktop application.

4. PREREQUISITE ACTIONS

NOTE *The listed Prerequisite Actions may be completed in any order.*

4.1 Planning and Coordination

Supervisor or designee

[1] **ENSURE** that the current revision of this document is available, and **IDENTIFY** this document as Working Copy or Information Only on the Title Page.

[2] **ENSURE** that a pre-evolution briefing is conducted and documented for all personnel involved in the performance of this procedure, in accordance with EP-DIV-AP-0112, EWMO Pre-Job Briefings.

[3] **ENSURE** the performance of this procedure has been properly scheduled on the TA-54 Area G facility schedule.

[4] **ENSURE** that an RWP has been issued for the planned activity, as applicable.

[5] **ENSURE** that, as a minimum, the following personnel trained to the use of this procedure are available for the performance of this procedure, as required:
- Two RCTs
- Two Waste Handling Operators
- One Person-in-Charge (PIC) (e.g., supervisor)
- One spotter, if required by SAC 5.7.8

4.1 Planning and Coordination (continued)

[6] **($) IF** a planned lift for a TRU WASTE container will exceed 12 ft above the ground surface,
OR any of the critical lift criteria identified in P101-25,
THEN DEVELOP a critical lift plan using the P101-25 Attachment B. (SAC 5.7.8)

[7] **VERIFY** the following with the TA-54 Operations Center:
- DEFINED AREAS involved in the work activities are in the OPERATION MODE.
- Area G is in Staffing Condition 1 (one), as defined in EP-DIV-AP-20059, Watchbill Administration.

NOTE *When a single drum is to be loaded (overpacked) into an OVERPACK drum, a set of five Shorty labels must be obtained from the Waste Help Team (wastehelp@lanl.gov) with the same unique identifier number as the drum being overpacked.*

[8] **ENSURE** that the TRU daughter waste container labels (e.g., Shorty barcode labels) have been obtained from the Waste Help Team (wastehelp@lanl.gov).

4.2 Special Tools and Equipment, Parts, and Supplies

4.2.1 Measuring and Test Equipment (M&TE)

NOTE *Torque wrenches are calibrated either as a percentage of full scale or a percentage of indicated value. The torque wrench accuracy information is found on the Calibration Certificate document. Torque wrenches are not calibrated in, nor are they to be used below 20% of their full range.*

Supervisor or designee

[1] **ENSURE** that the following measuring and test equipment is available, as required:
- Torque wrench calibrated to and capable of torqueing 0 to 216 in-lb (0 to 18 ft-lb)
- Torque wrench calibrated to and capable of torqueing 12 to 40 ft-lb
- Torque wrench calibrated to and capable of torqueing 55 to 75 ft-lb

IPC-1

[2] **IF** a torque wrench has exceeded the calibration due date,
THEN:

[A] **LABEL** or **MARK** the torque wrench as not to be used.

[B] **OBTAIN** another torque wrench that is within the calibration due date.

4.2.2 Special Tools and Equipment

Supervisor or designee

[1] **ENSURE** that the following special tools and equipment are available, as required:

- Two-way radio or cellular phone
- 5/16 in. long-arm hex key
- 5/16 in. hex bit socket
- 15/16 in. socket
- 15/16 in. open end or box wrench
- 9/16 in. long-arm hex key
- 9/16 in. hex bit socket
- 9/16 in. socket
- 9/16 in. open end or box wrench
- 1-1/2 in. 6 or 12 point socket for filter installation
- Ratchet drive wrench
- Lineup bar (bull or drift pin) with 3/8” rounded point
- 1/4 in.-20 UNC x 0.29” swivel hoist ring
- Local Exhaust Ventilation Unit (to be used as required by the RCT and RWP for opening drums)
- All PPE as required by the RWP or supervision, as applicable, including but not limited to:
  - Cut resistant (e.g., leather, leather palm, or HexArmor®) gloves for drum handling
  - Tyvek® sleeves or equivalent
  - Eye protection at all times (safety glasses with side shields when not wearing a full-face respirator)
  - Safety shoes at all time
  - Long pants and sleeved shirt
  - Hard hats (when specified by IHS staff)
  - Thermoluminescent dosimeter
- Certified hoisting and rigging equipment (e.g., slings, attachments)
- Inspection mirror or equivalent
- Flashlight
- Mechanical means (e.g., push or pull rods) to move empty OVERPACKS out from under a suspended load without requiring any body part to pass under the suspended load
- Department of Transportation (DOT) 7A certified 85-gallon or 110-gallon OVERPACKS or SWBs
- Rivet Installation Header Tool (Supplier: Bolhof RIVNUT™. Options C-722 Wrench Type Header, C-900 Model A or C-362 Pneumatic-Hydraulic Header)

4.2.2 Special Tools and Equipment (continued)

- 3/4 in. – 14 NPSM or 3/4 in. – 14 NPT thread tap
- 1/2 in. – 13 UNC thread tap
- Electric drill
- Vice grips or equivalent
- Channel locks or equivalent
- Grinder with grinding wheel or reciprocating saw with metal blade
- Certified Crane
- Rivnut removal tool (e.g., dikes, wire cutters, or chisel and hammer)
- WCATS mobile device
- Appropriate size (e.g., 30-gal, 55-gal, 85-gal, or 110-gal) drum lid restraint

4.2.3 Consumables

Supervisor or designee

[1] **ENSURE** that the following consumables are available, as required:

- Absorbent wipes
- 30-, 55-, 85-, and 110-gallon drum plastic contamination control sleeves or vented bag
- WIPP-approved filtered vents (e.g., NucFil-019DS, NucFil-13, or NucFil-072S)
- Decontamination supplies
- RP-approved Tape
- Chemwipes (lint-free wipes)
- Fantastik® cleaner or equivalent
- Nitrile gloves and apron for rust inhibitor removal
- Plastic waste bags
- Plastic sheeting
- Scouring pads or other tools required for removing rust inhibitor/contamination from drums
- Spill response kit
- Rivets (Supplier Bolhof RIVNUT™, Part Number S50-3069)
- 1/2 in.-13 x 1 3/4 in. UNC Socket Flat Head Cap Screws (SFHCS) (for SWB lid assembly), Part Number 91263A608
- Thread-locker (e.g., Loctite® 271 or Loctite® 680)
- Thread sealant (e.g., Loctite® 246)
- Lubricating oil (e.g., WD-40)
- RTV silicone gasket maker (e.g., Loctite® 598)
- RTV-732 sealant or equivalent
- Labels (e.g., radioactive and waste container)

4.3 Field Preparation

Supervisor or Waste Handling Operator

[1] **ENSURE** that the hoisting and rigging materials (e.g., lifting magnets and slings and crane) have been inspected and are approved for use in accordance with P101-25, Cranes, Hoists, Lifting Devices, and Rigging Equipment, as necessary.

[2] **ENSURE** that the waste container has a WIPP-approved filtered vent installed, as required.

NOTE *Opening of an empty waste container (SWB or drum) with an internal surface contamination value documented to be less than to the values listed in Table 14-2, Surface Contamination Values, of P121, Radiation Protection, is not required to be opened within a contamination control enclosure.*

[3] **IF** performing one of the following:

- Section 5.2, Opening SWBs
- Section 5.3, Unloading SWBs
- Section 6.2, Opening Overpack Drums (e.g., Pipe Overpack Container, 85- or 110-gal)
- Section 6.3, Unloading Overpack Drums (e.g., 85- or 110-gal)
- Section 6.4, Waste Container Rust Inhibitor Removal

THEN:

[A] **ENSURE** that this activity is conducted in an RP-approved location, as required.

[B] **IF** performing processing activities in a radiological contamination control tent, **THEN:**

[a] **ENSURE** that the initial contamination control enclosure approval has been completed in accordance with RP-1-DP-65, Radiological Containments, as required.

NOTE *In accordance with RP-1-DP-65 a containment tent that is in place for greater than 30 days the containment tent **SHALL** be re-inspected by the Fire Protection Engineer at an interval not to exceed 45 days which is documented on the daily inspection checklist.*

[b] **ENSURE** that the daily radiological containment inspection has been performed in accordance with RP-1-DP-65.

4.3 Field Preparation (continued)

[C] **ENSURE** that the applicable round sheet has been completed (e.g., EP-AREAG-WO-DOP-1162, TA-54 Area G Dome 231 PermaCon Operator Round Sheet; EP-AREAG-WO-DOP-1061, TA-54 Area G Dome 375 PermaCon Operator Round Sheet; or EP-AREAG-WO-DOP-0220, TA-54 Area G Building 412 Containment Tent Operator Round Sheet), as required.

[4] **IF** unloading a waste container from an OVERPACK waste container (e.g., SWB or 85-gal drum) where there is a potential labeling discrepancy,
THEN:

[A] **OBTAIN** available inner waste container information (e.g., PE-Ci values, filtered vent number, and waste container condition).

[B] **VERIFY** that the internal waste container can be safely and compliantly removed from the OVERPACK waste container using the available inner waste container information.

[5] **IF** opening an SWB containing an UNVENTED TRU WASTE DRUM (Section 5.2), **THEN ENSURE** that the SWB has been moved into an ISOLATION AREA.

5. PERFORMANCE—STANDARD WASTE BOX (SWB) OPERATIONS

NOTE *Radiological surveys may be performed as determined necessary [e.g., by an RP representative (e.g., RCT)] any time during the performance of this procedure.*

5.1 SWB Preparation

This section is a stand-alone section and may be performed independently of, or in conjunction with, other Performance sections.

NOTE 1 *In order to open an empty used SWB, the internal surface contamination values on the SWB must be documented to be less than to the values listed in Table 14-2, Surface Contamination Values, of P121 or otherwise the SWB must be opened within a contamination control enclosure.*

NOTE 2 *The TRU DRUM PREPARATION task on the WCATS mobile device may be performed in conjunction with the performance of the physical build of an SWB.*

Supervisor or Waste Handing Operator

[1] **ENSURE** that the prerequisite actions are completed.

Waste Handling Operator

[2] **OBTAIN** a DOT 7A certified SWB.

[3] **IF** the empty SWB had previously been loaded (used),
THEN:

[A] **ENSURE** that the SWB filtered vents and pipe plugs have been removed.

[B] **IF** radiological contamination is detected during the evolution,
THEN FOLLOW the direction of the RCT and RWP.

[4] **($) VISUALLY INSPECT** the SWB for any major damage (i.e., significant deformation, punctures, tears, or corrosion) which would render the container unusable. [AC 5.6.11(2)]

5.1 SWB Preparation (continued)

[5] **IF** the SWB fails the visual inspection,
THEN:

[A] **IDENTIFY** (e.g., tag or mark) the SWB indicating that it is defective.

[B] **SEGREGATE** the SWB in order to prevent the item from being used.

[C] **NOTIFY** supervision of the discrepancy.

NOTE 1 *A Quality Assurance (QA) representative may be contacted for assistance with the NCR process.*

NOTE 2 *The NCR may be initiated at an operationally convenient time.*

Supervisor

[D] **ENSURE** that an NCR is initiated in accordance with P330-6, Nonconformance Reporting, as required.

Waste Handling Operator

[E] **GO** to Step 5.1[2].

NOTE *Some of the items in the following step may be verified at various times during the performance of this procedure.*

[6] **ENSURE** that all assembly components are present, including body assembly (1 each), lid assembly (1 each), gasket assembly (4 pieces), pipe plugs (2 each), SFHCSs (42 each), and WIPP-approved filtered vents (2 each).

[7] **IF** the SWB lid has been removed,
THEN GO to Step 5.1[17].

[8] **REMOVE** the SFHCSs from the SWB lid, and **RETAIN** the SFHCSs for re-installation at a later time.

[9] **IF** an SWB SFHCS **CANNOT** be removed (e.g., stripped SFHCS),
THEN REMOVE the SFHCS head (e.g., drill or hacksaw), as necessary.

5.1 SWB Preparation (continued)

[10] **ATTACH** appropriate rigging equipment 1/4-20 UNC-2A X .29-in. long swivel hoist ring or two 6 in. x 9 in magnetic assemblies (150 lb capacity for a 1/8 in. thick lid) to the SWB lid.

[11] **IF** a 1/4-20 UNC-2A X .29-in. long swivel hoist ring was installed,
THEN torque the 1/4-20 UNC-2A X .29-in. long swivel hoist ring to approximately 6 ft-lb (72 in-lb) ensuring that full thread engagement is achieved.

[12] **RIG** a 2 in. x 4 ft sling or equivalent (capacity greater than or equal to 200 lb) to the magnetic assemblies or appropriate rigging equipment (e.g., swivel hoist ring), as required.

[13] **ENSURE** that a spreader bar or equivalent is properly placed and secured on the forklift.

[14] **SECURE** the slings to the hook on the bottom of the spreader bar or equivalent.

WARNING

Pinch points will be present between the lid and the body shell flange. Keep hands and fingers clear during lid removal to prevent injury.

[15] **SLOWLY LIFT** the SWB lid upward/off and clear of the SWB body shell flange.

CAUTION

It is recommended that the lid be placed on suitable support blocking to prevent contact of the lid flange with the ground or floor. This will preclude damage to the edge of the lid that forms the gasket sealing surface.

[16] **CAREFULLY LOWER** the SWB lid to a safe cribbing or storage area.

[17] **VISUALLY INSPECT** SWB lid for defects that would prevent the SWB from being used, and **VERIFY** that the SWB lid number matches the SWB number and that there is a total of 42 SFHCSs.

5.1 SWB Preparation (continued)

[18] **IF** the SWB lid fails the visual inspection,
OR the SWB lid number does **NOT** match the SWB number,
THEN:

[A] **IDENTIFY** (e.g., tag or mark) the SWB indicating that it is defective.

[B] **SEGREGATE** the SWB in order to prevent the item from being used.

[C] **NOTIFY** supervision of the discrepancy.

NOTE 1 *A QA representative may be contacted for assistance with the NCR process.*

NOTE 2 *The NCR may be initiated at an operationally convenient time.*

Supervisor

[D] **ENSURE** that an NCR is initiated in accordance with P330-6, as required.

Waste Handling Operator

[E] **GO** to Step 5.1[2].

[19] **RECORD** the SWB serial number on Attachment 1, TA-54 Area G Standard Waste Box (SWB) Preparation Data Sheet.

[20] **OBTAIN** a minimum of two WIPP-approved filtered vents (e.g., NucFil-019DS or NucFil-013) and a sufficient number of 3/4 in. American National Standard Taper Pipe Thread (NPT) SWB plugs to install in the remaining SWB vent ports.

NOTE *Lubricating oil (i.e., WD-40 or equivalent) may be used for cleaning of threads.*

[21] **CLEAN** the threads of the WIPP-approved filtered vents or vent port, as necessary.

5.1 SWB Preparation (continued)

WARNING

To prevent personnel injury from sharp burrs and edges when scoring a stripped rivnut® using a scoring tool, leather gloves and safety glasses with side shields SHALL be worn.

NOTE *All of the SWB gasket may be removed because the entire SWB gasket is to be replaced during closure.*

[22] **IF** a rivnut® is loose or rotates,
THEN:

[A] **REMOVE** the portion of the SWB gasket around the rivnut® to be repaired, as necessary.

[B] **SCORE** the stripped rivnut® using a scoring tool (e.g., dike or chisel) in several locations (e.g., three) around the upper flange of the rivnut®.

[C] **CRIMP** the scored rivnut®.

[D] **FORCE** the rivnut® into the SWB sealing surface channel.

[E] **INSTALL** a new rivnut® using a Rivet Installation Header Tool or equivalent.

[23] **IF** a rivnut® has minor thread deformation (e.g., burrs or cross thread),
THEN CORRECT the deformation by running a 1/2 in.-13 UNC thread tap through the rivnut®.

[24] **IF** WIPP-approved filtered vents have either an NPT or an American National Straight Pipe Thread for Mechanical Joints (NPSM) threaded body,
THEN REMOVE the rubber gaskets, if desired.

5.1 SWB Preparation (continued)

WARNING

Due to skin allergen hazard, nitrile, pylox, or trionic gloves SHALL be worn when applying Loctite®.

[25] **APPLY** a thread-locker (e.g., Loctite® 271 or Loctite® 680) to the first three threads of the WIPP-approved filtered vents.

[26] **ENGAGE** the threads of the WIPP-approved filtered vents in the 3/4 in. plug holes.

NOTE *The number of engaged threads can be determined by counting two full rotations of the WIPP-approved filtered vent.*

[27] **HAND SCREW** the WIPP-approved filtered vents into the 3/4 in. plug holes until a minimum of two WIPP-approved filtered vent threads are engaged in the plug holes.

[28] **IF** a WIPP-approved filtered vent **CANNOT** be installed with a minimum of two threads engaged in the plug hole,
AND multiple filters and plug holes have been tried,
THEN:

[A] **REMOVE** the WIPP-approved filtered vent that could not be installed.

WARNING

Tapping threads can create sharp burrs and edges. Wear leather gloves and safety glasses with side shields when tapping threads.

NOTE *A 3/4 in. – 14 NPSM threaded tap is used for SWBs manufactured after April 2011 and a 3/4 in. – 14 NPT threaded tap is used for SWBs manufactured on or before April 2011.*

[B] **TAP** the plug hole using the appropriate size tap (i.e., 3/4 in. – 14 NPSM or 3/4 in. – 14 NPT thread tap).

5.1 SWB Preparation (continued)

[C] **REPEAT** Steps 5.1[25] through 5.1[28].

[29] **IF** a WIPP-approved filtered vent **CANNOT** be installed with a minimum of two threads engaged in the plug hole,
THEN:

[A] **REMOVE** the WIPP-approved filtered vent that could not be installed.

[B] **REPEAT** Steps 5.1[25] through 5.1[28] using a different WIPP-approved filtered vent or plug hole.

[30] **RECORD** the WIPP-approved filtered vent torque wrench information on Attachment 1.

IPC-1

[31] **TORQUE** the WIPP-approved filtered vents to a nominal 180 in.-lb (156 to 204 in.-lb), and **RECORD** the actual torque values on Attachment 1.

[32] **RECORD** the WIPP-approved filtered vent information on Attachment 1.

NOTE *SWB plugs are installed in the 3/4 in. plug holes that do not have the WIPP-approved filtered vents installed.*

[33] **IF** four WIPP-approved filtered vents were **NOT** installed in the SWB,
THEN:

[A] **APPLY** a thread-locker (e.g., Loctite® 271 or Loctite® 680) to the threads of the SWB plugs to be installed.

[B] **ENGAGE** the threads of the SWB plugs in the 3/4 in. plug holes.

NOTE *The number of engaged threads can be determined by counting two full rotations of the SWB plug.*

[C] **HAND SCREW** the SWB plugs into the remaining 3/4 in. plug holes until a minimum of two SWB plug threads are engaged in the plug hole.

5.1 SWB Preparation (continued)

[34] **IF** an SWB plug **CANNOT** be installed with a minimum of two threads engaged in the plug hole,
AND multiple SWB plugs have been tried,
THEN:

[A] **REMOVE** the SWB plug that could not be installed.

WARNING

Tapping threads can create sharp burrs and edges. Wear leather gloves and safety glasses with side shields when tapping threads.

NOTE *A 3/4 in. – 14 NPSM threaded tap is used for SWBs manufactured after April 2011 and a 3/4 in. – 14 NPT threaded tap is used for SWBs manufactured on or before April 2011.*

[B] **TAP** the plug hole using the appropriate size tap (i.e., 3/4 in. – 14 NPSM or 3/4 in. – 14 NPT thread tap).

[C] **REPEAT** Steps 5.1[33] and 5.1[34].

[35] **IF** an SWB plug **CANNOT** be installed with a minimum of two threads engaged in the vent port,
THEN:

[A] **REMOVE** the SWB plug that could not be installed.

[B] **REPEAT** Steps 5.1[33] and 5.1[34] using a different SWB plug.

IPC-1

[36] **TORQUE** the SWB plugs to a nominal 120 in.-lb (60 to 180 in.-lb), and **RECORD** the actual torque values on Attachment 1.

[37] **REMOVE** all excess pipe plug sealant from the exterior and interior of the packaging.

5.1 SWB Preparation (continued)

NOTE 1 *The TRU DRUM PREPARATION task on the WCATS mobile device may be performed out of sequence.*

NOTE 2 *The following step may be performed at a later time when the prepared SWB is to be loaded.*

[38] **IF** the prepared SWB is to be labeled,
THEN:

[A] **ENSURE** that a TRU DRUM PREPARATION task has been completed for the SWB using a WCATS application.

[B] **ATTACH** one identification (ID) barcode label (Shorty label) near the center <u>on each curved side</u> above or below the raised bars of the SWB.

[C] **ATTACH** one ID barcode label (Shorty label) near the center <u>on each flat side</u> of the SWB.

[D] **ATTACH** one ID barcode label (Shorty label) near the center of the top of the SWB.

[39] **IF** the prepared SWB is **NOT** to be used until a later time,
THEN CLOSE the SWB as follows:

[A] **ATTACH** appropriate rigging equipment 1/4-20 UNC-2A X .29-in. long swivel hoist ring <u>or</u> two 6 in. x 9 in magnetic assemblies (150 lb capacity for a 1/8 in. thick lid) to the SWB lid.

[B] **IF** a 1/4-20 UNC-2A X .29-in. long swivel hoist ring was installed,
THEN TORQUE the 1/4-20 UNC-2A X .29-in. long swivel hoist ring to approximately
6 ft-lb (72 in-lb) ensuring that full thread engagement is achieved.

5.1 SWB Preparation (continued)

[C] **RIG** a 2 in. x 4 ft sling or equivalent (capacity greater than or equal to 200 lb) to the magnetic assemblies or appropriate rigging equipment (e.g., swivel hoist ring), as required.

[D] **ENSURE** that a spreader bar or equivalent is properly attached and secured on the forklift.

[E] **SECURE** the sling to the hook on the bottom of the spreader bar or equivalent.

[F] **SLOWLY LIFT** and **MOVE** the SWB lid to the SWB.

[G] **LIFT** the SWB lid above the SWB and center the SWB lid over the SWB body shell flange.

WARNING

Pinch points will be present between the lid and the body shell flange. Keep hands and fingers clear during lid installation to prevent injury.

[H] **SLOWLY LOWER** the SWB lid onto the SWB body shell flange ensuring that the gasket is not damaged during the lowering of the SWB lid.

[I] **INSTALL** and **HAND TIGHTEN** a sufficient number (minimum of four) of SFHCSs in order to secure the SWB lid for movement.

[J] **TIGHTEN** the SFHCSs with a wrench or ratchet enough to keep the lid from shifting.

[K] **REMOVE** the lid lift rigging and hoist ring as required.

[40] **ATTACH** the original Attachment 1 to the SWB or **ENSURE** that Attachment 1 is forwarded to the applicable supervisor.

5.2 Opening SWBs

This section is a stand-alone section and may be performed independently of, or in conjunction with, other Performance sections.

NOTE *A new SWB that has been prepared in accordance with Section 5.1, SWB Preparation, does not need to be opened in accordance with this section.*

WARNING

Opening previously loaded SWBs (used) is to be performed in an RP-approved location in order to reduce the potential for radiological contamination.

Supervisor or Waste Handling Operator

[1] **ENSURE** that the prerequisite actions are completed.

Waste Handling Operator

[2] **IF** radiological contamination is detected during evolution,
THEN FOLLOW the direction of the RCT and RWP.

NOTE *LCO 3.1.7 is not applicable to cemented or vitrified waste forms in accordance within the NOTE of LCO 3.1.7. However, cemented and vitrified waste forms will be treated conservatively and not exempted from the requirements of LCO 3.1.7.*

[3] **($) IF** an internal TRU WASTE container has greater than or equal to 200 PE-Ci,
AND the container or activity does **NOT** satisfy one of the following criterion,

- Is a POC
- Is being temporarily removed from a DOUBLEPACK during repackaging or characterization (e.g., NDE/NDA)
- Performing SSSR activities

THEN NOTIFY the TA-54 Operations Center of the drum number and of the potential need to enter the applicable action statement of LCO 3.1.7 in accordance with EP-DIV-AP-13, WDP TSR-Related Operational Limits Actions Compliance Tracking.

5.2 Opening SWBs (continued)

[4] **REMOVE** the SFHCSs from the SWB lid, and **RETAIN** the SFHCSs for re-installation at a later time.

[5] **IF** a stripped SFHCS is encountered while the SFHCSs are being removed,
THEN:

[A] **REMOVE** the SFHCS head (e.g., drill or hacksaw), as necessary.

[B] **ATTACH** appropriate rigging equipment <u>or</u> two 6 in. x 9 in. magnetic assemblies (150 lb capacity for a 1/8 in. thick lid) to the SWB lid.

[C] **IF** removing the SWB lid with a forklift,
THEN:

[a] **RIG** a 2 in. x 4 ft sling or equivalent (capacity ≥ 200 lb) to the magnetic assemblies.

[b] **ENSURE** that a spreader bar or equivalent is properly attached and secured on the forklift.

[c] **SECURE** the sling to the hook on the bottom of the spreader bar or equivalent.

[d] **GO** to Step 5.2[5][E].

[D] **ENSURE** that the gantry crane hook is attached to the SWB lid rigging equipment (e.g., swivel hoist ring).

[E] **SLIGHTLY LIFT** the SWB lid enough to allow an RCT to perform a radiological survey of the underside of the SWB lid.

5.2 Opening SWBs (continued)

Waste Handling Operator

[F] **IF** the radiological survey indicates radiological levels in excess of the RWP or at the direction of the RCT,
THEN:

[a] **PLACE** the SWB lid on the SWB.

[b] **NOTIFY** supervision and the TA-54 Operations Center of the discrepancy and **REQUEST** further guidance.

[c] **EXIT** this procedure.

[G] **REMOVE** the lid to a safe location away from the SWB.

[H] **($) IF** an UNVENTED TRU WASTE DRUM is inside of the SWB that was **NOT** anticipated (e.g., planned to be unloaded),
OR an UNVENTED TRU WASTE DRUM without a lid restraint is laying horizontally inside of the SWB,
THEN: (LCO 3.4.1)

[a] **STOP** non-essential activities within 15 ft of the UNVENTED TRU WASTE DRUM.

[b] **NOTIFY** the TA-54 Operations Center of the drum number and of the requirement to ensure that the applicable action statement of LCO 3.4.1 has been entered in accordance with EP-DIV-AP-13.

[c] **PROCEED** as directed by TA-54 Operations Center.

[I] **IF** the rivnut® is **NOT** to be removed,
THEN EXIT this section and **PERFORM** the applicable actions as directed by supervision.

5.2 Opening SWBs (continued)

NOTE *All of the SWB gasket may be removed because the entire SWB gasket is to be replaced during closure.*

[J] **REMOVE** the portion of the SWB gasket around the rivnut® to be repaired, as necessary.

[K] **IF** a portion of the SFHCS is in the rivnut®,
THEN REMOVE the remaining portion of the SFHCS (e.g., channel locks holding the rivnut® and unscrew the SFHCS) or **CUT** the rivnut® flush with the SWB sealing surface.

[L] **IF** a portion of the rivnut® shoulder remains above the SWB sealing surface,
THEN:

[a] **SCORE** the stripped rivnut® using a scoring tool (e.g., dike or chisel) in several locations (e.g., three) around the upper flange of the rivnut®.

[b] **CRIMP** the scored rivnut®.

[M] **FORCE** the rivnut® into the SWB sealing surface channel.

[N] **INSTALL** a new rivnut® using a Rivet Installation Header Tool or equivalent.

[O] **GO** to the applicable section as directed by supervision.

[6] **ATTACH** appropriate rigging equipment (e.g., 1/4-20 UNC-2A X .29-in. long swivel hoist ring) <u>or</u> two 6 in. x 9 in magnetic assemblies (150 lb capacity for a 1/8 in. thick lid) to the SWB lid.

[7] **IF** a 1/4-20 UNC-2A X .29-in. long swivel hoist ring was installed,
THEN TORQUE the 1/4-20 UNC-2A X .29-in. long swivel hoist ring to approximately 6 ft-lb (72 in-lb) ensuring that full thread engagement is achieved.

5.2 Opening SWBs (continued)

[8] **IF** removing the SWB lid with a forklift,
THEN:

[A] **RIG** a 2 in. x 4 ft sling or equivalent (capacity greater than or equal to 200 lb) to the magnetic assemblies or appropriate rigging equipment (e.g., swivel hoist ring), as required.

[B] **ENSURE** that a spreader bar or equivalent is properly placed and secured on the forklift.

[C] **SECURE** the slings to the hook on the bottom of the spreader bar or equivalent.

[D] **GO** to Step 5.2[10].

NOTE *The nominal tare weight of an SWB is 640 lb with the nominal weight of the SWB lid being 164 lb.*

[9] **ENSURE** that the gantry crane hook is attached to the SWB lid rigging equipment (e.g., swivel hoist ring).

WARNING

Pinch points will be present between the lid and the body shell flange. Keep hands and fingers clear during lid removal to prevent injury.

[10] **SLIGHTLY LIFT** the SWB lid enough to allow an RCT to perform a radiological survey of the underside of the SWB lid.

5.2 Opening SWBs (continued)

[11] **IF** the radiological survey indicates radiological levels in excess of the RWP or at the direction of the RCT,
THEN:

[A] **PLACE** the SWB lid on the SWB.

[B] **NOTIFY** supervision and the TA-54 Operations Center of the discrepancy and **REQUEST** further guidance.

[C] **EXIT** this procedure.

[12] **SLOWLY LIFT** and **MOVE** the SWB lid free of the SWB or **MOVE** the SWB out from under the SWB lid.

[13] **LOWER** the SWB lid and **STORE** in a safe location.

[14] **($) IF** a 30-, 55-, 85-, or 110-gal waste container within the SWB has an obstructed vent opening (e.g., obstructed WIPP-approved filtered vent <u>or</u> bung hole with bung installed), **AND** the UNVENTED TRU WASTE DRUM is **NOT** intentionally being moved from one OVERPACK to another,
THEN: (LCO 3.4.1)

[A] **STOP** non-essential activities within 15 ft of the UNVENTED TRU WASTE DRUM.

[B] **NOTIFY** the TA-54 Operations Center of the drum number and of the requirement to ensure that the applicable action statement of LCO 3.4.1 has been entered in accordance with EP-DIV-AP-13.

[C] **WHEN** instructed by the TA-54 Operations Center to proceed,
THEN CLOSE the SWB in accordance with Section 5.5, SWB Closure.

5.3 Unloading SWBs

This section is a stand-alone section and may be performed independently of, or in conjunction with, other Performance sections.

WARNING

Waste containers are to be removed from an OVERPACK in an RP-approved location in order to reduce the potential for radiological contamination.

Supervisor or Waste Handling Operator

[1] **ENSURE** that the prerequisite actions are completed.

Waste Handling Operator

[2] **IF** radiological contamination is detected during evolution,
THEN FOLLOW the direction of the RCT and RWP.

[3] **ENSURE** that the SWB has been opened in accordance with Section 5.2, Opening SWBs.

WARNING

At no time is any individual permitted to place any portion of the body under a suspended load in order to prevent personnel injury.

[4] **IF** removing an item other than a drum from the SWB,
THEN:

[A] **ENSURE** that the item to be removed from the SWB has been rigged using the knowledge and technique of an Incidental or Qualified Rigger, as required by P101-25, and authorized by supervision.

5.3 Unloading SWBs (continued)

NOTE *The RCT may perform a radiological survey of the item bottom, using a long-handled tool, while the item is suspended.*

[B] **ENSURE** that either a spreader bar or equivalent is properly attached and secured to the forklift and that the rigging is attached to the spreader bar or equivalent or the rigging has been attached to the gantry crane.

[C] **REMOVE** the item from the SWB.

[D] **LOWER** the item to a stable surface (e.g., ground).

[E] **WHEN** the item reaches the stable surface (e.g., ground),
THEN LOWER the rigging until the rigging becomes slack enough to detach.

[F] **GO** to Step 5.3[20].

[5] **IF** removing a drum that is **NOT** in a vertical position in the SWB,
THEN:

[A] **POSITION** one cinch strap around the drum to be removed, near the drum top.

[B] **IF** unloading an SWB with a forklift,
THEN:

[a] **ENSURE** that a spreader bar or equivalent has been attached and secured on the forklift.

[b] **POSITION** the forklift as necessary.

[C] **SECURE** the cinch strap to the hook on the spreader bar or equivalent or gantry crane hook.

[D] **SLOWLY RAISE** the cinch strap until the cinch strap becomes tight.

5.3 Unloading SWBs (continued)

WARNING

Pinch points exist during drum loading evolutions. Keep hands and fingers clear during drum loading evolutions to prevent injury. Lower the drum back into the SWB before making adjustments to the cinch straps.

[E] **($) SLOWLY LIFT** and **MANEUVER** the drum to a vertical position inside the SWB by adjusting the cinch strap, as necessary, ensuring that a spotter is present for lifts planned to exceed 4 ft above the ground surface and a critical lift plan is established for lifts planned to exceed 12 ft above the ground surface. (SAC 5.7.8)

[F] **LOWER** the drum into the SWB.

[G] **IF** radiological contamination is detected during evolution,
THEN FOLLOW the direction of the RCT and RWP.

[H] **REMOVE** cinch strap.

[6] **IF** removing an UNVENTED TRU WASTE DRUM from an SWB,
THEN:

[A] **($) ENSURE** that the appropriate size drum lid restraint has been obtained and visually inspected for the following applicable criteria, and **CHECK** (√) SAT or UNSAT on Attachment 9, TA-54 Area G Drum Lid Restraint Inspection Data Sheet: (SR 4.4.2.1)

- Degradation (e.g., no indication of cracked parts, missing fasteners, loose or frayed parts, excessive wear, or unusual deformation)
- Missing or illegible identification
- Melting or charring
- Broken or worn stitching in load bearing splices
- Knots in any part of the drum lid restraint
- Discoloration and brittle or stiff areas

[B] **IF** the visual inspection of a drum lid restraint is unsatisfactory,
THEN:

[a] **SEGREGATE** the unsatisfactory drum lid restraint from the other restraints, and **IDENTIFY** the restraint as unusable.

5.3 Unloading SWBs (continued)

[b] **GO** to Step 5.3[6][A].

NOTE *The drum lid restraint should be tight enough around the drum so that the ratchet strap does not slide over the lip, and that at least two full wraps of the strap are around the ratchet barrel.*

[C] **ENSURE** that a drum lid restraint is installed below a lip (e.g., the first drum rolling hoop from the lid or drum locking ring) of each UNVENTED TRU WASTE DRUM ensuring that a minimum of two full wraps of the strapping is around the ratchet barrel.

NOTE *Checking SAT for drum lid restraint installation indicates that all the drum lid restraints have been installed in a satisfactory manner, except as may be indicated in the comments section of Attachment 2.*

[D] **($) VERIFY** that the UNVENTED TRU WASTE DRUM has a drum lid restraint installed, and **CHECK** (√) SAT or UNSAT on Attachment 2. (SR 4.4.2.1)

[7] **ATTACH** the drum lift fixture (sling or drum handler as appropriate) to the bottom of the spreader bar or equivalent or gantry crane hook.

[8] **ATTACH** the drum lift fixture to the top of the drum.

[9] **SLOWLY RAISE** the drum lift fixture until the drum lift fixture becomes tight.

[10] **($) RAISE** the drum to allow the bottom of the drum to clear the edges of the SWB using a spotter and/or critical lift plan as required. (SAC 5.7.8)

[11] **MANEUVER** the forklift and drum as necessary to position the drum clear of the SWB.

5.3 Unloading SWBs (continued)

WARNING

At no time is any individual permitted to place any portion of the body under a suspended load in order to prevent personnel injury.

NOTE *The RCT may perform a radiological survey of the drum bottom, using a long-handled tool, while the drum is suspended.*

[12] **LOWER** the drum to a stable surface (e.g., ground or drum dolly).

[13] **WHEN** the drum reaches the stable surface (e.g., ground or drum dolly),
THEN LOWER the drum lift fixture until the drum lift fixture becomes slack enough to detach.

[14] **IF** radiological contamination is detected during evolution,
THEN FOLLOW the direction of the RCT and RWP.

[15] **DETACH** the lift fixture from the drum or item.

[16] **IF** a drum was removed from the SWB,
THEN:

[A] **DETERMINE** whether the internal drum number matches the information for the drums that should be inside of the SWB (e.g., the drum numbers match the drum numbers on the SWB All-In-One label).

[B] **IF** there is <u>no</u> drum number on the internal drum,
AND the internal drum has **NOT** been previously identified/evaluated,
THEN:

[a] **NOTIFY** supervision of the discrepancy.

NOTE *Internal drums without a drum number may be assumed to be the expected drum unless there is information on the internal drum (e.g., labeling) that would indicate that internal drum is <u>not</u> the expected drum.*

Supervisor

[b] **DETERMINE** whether to continue to process the internal drum.

5.3 Unloading SWBs (continued)

Waste Handling Operator

[c] **IF** the internal drum is **NOT** to be processed,
THEN:

1. **PLACE** the internal drum into the original SWB.

2. **CLOSE** the SWB in accordance with Section 5.5, SWB Closure, and **RETURN** to the following step.

3. **NOTIFY** supervision of the discrepancy.

Supervisor

4. **NOTIFY** the applicable Operations Manager or designee and the TA-54 Operations Center of the discrepancy.

NOTE 1 *A QA representative may be contacted for assistance with the NCR process.*

NOTE 2 *The NCR may be initiated at an operationally convenient time.*

5. **ENSURE** that an NCR is initiated in accordance with P330-6, as required.

Waste Handling Operator

6. **SEGREGATE** the SWB for further processing.

7. **PROCEED** as directed by supervision.

[C] **IF** the internal drum and SWB numbers do **NOT** match,
AND the internal drum has **NOT** been previously identified/evaluated,
THEN:

[a] **NOTIFY** supervision of the discrepancy.

Supervisor

[b] **NOTIFY** the applicable Operations Manager or designee and the TA-54 Operations Center of the discrepancy.

5.3 Unloading SWBs (continued)

NOTE 1 *A QA representative may be contacted for assistance with the NCR process.*

NOTE 2 *The NCR may be initiated at an operationally convenient time.*

[c] **ENSURE** that an NCR is initiated in accordance with P330-6, as required.

Waste Handling Operator

[d] **PLACE** the internal drum in a SWB.

[e] **CLOSE** the SWB in accordance with Section 5.5, SWB Closure, and **RETURN** to the following step.

[f] **SEGREGATE** the SWB for future processing.

[g] **PROCEED** as directed by supervision.

[D] **IF** the internal drum and SWB numbers do **NOT** match,
AND the internal drum has been previously identified/evaluated,
THEN:

[a] **NOTIFY** supervision of the discrepancy.

[b] **RECORD** the available internal drum information and requested OVERPACK waste container information on Attachment 7, TA-54 Area G Overpack Waste Container Labeling Discrepancy Data Sheet.

[c] **CREATE** a temporary unique identifier for the internal drum consisting of the location (e.g., 54-231 or 54-412), date (e.g., 07-19-12), and next sequential number (e.g., 1, 2, 3, or 4).

Example: 54-231-07-18-12-1, 54-412-07-20-12-5, or 54-231-07-18-12-2

[d] **RECORD** the Temporary Unique Identifier number on Attachment 7 and on the internal drum using a permanent marker.

NOTE *UNVENTED TRU WASTE DRUMS and drums with a questionable integrity are to be overpacked into a compliant OVERPACK (e.g., SWB or 85-gal OVERPACK drum).*

[e] **REQUEST** applicable actions to disposition the internal drum from supervision and the applicable Operations Manager.

5.3 Unloading SWBs (continued)

[17] **($) IF** an UNVENTED TRU WASTE DRUM was removed from the SWB,
AND the UNVENTED TRU WASTE DRUM is to be placed into an OVERPACK/DOUBLEPACK,
THEN GO to Section 5.4, Loading SWBs. (LCO 3.4.1)

[18] **REPEAT** Steps 5.3[4] through 5.3[17] as needed to remove additional items from the SWB.

[19] **IF** the SWB is **NOT** empty,
THEN GO to the applicable section (e.g., Section 5.4, Loading SWBs) or the applicable approved procedure, as directed by supervision.

[20] **ENSURE** that the gasket holes match the SWB body holes, and that the mitered ends fit together properly before the installation.

[21] **PERFORM** minor adjustments to the gasket, as necessary.

[22] **ATTACH** appropriate rigging equipment 1/4-20 UNC-2A X .29-in. long swivel hoist ring or two 6 in. x 9 in magnetic assemblies (150 lb capacity for a 1/8 in. thick lid) to the SWB lid.

[23] **IF** a 1/4-20 UNC-2A X .29-in. long swivel hoist ring was installed,
THEN TORQUE the 1/4-20 UNC-2A X .29-in. long swivel hoist ring to approximately 6 ft-lb (72 in-lb) ensuring that full thread engagement is achieved.

[24] **RIG** a 2 in. x 4 ft sling or equivalent (capacity greater than or equal to 200 lb) to the magnetic assemblies or appropriate rigging equipment (e.g., swivel hoist ring), as required.

[25] **IF** unloading an SWB with a forklift,
THEN ENSURE that a spreader bar or equivalent is properly attached and secured on the forklift.

[26] **SECURE** the sling to the hook on the bottom of the spreader bar or equivalent or gantry crane.

[27] **SLOWLY LIFT** and **MOVE** the SWB lid to the SWB.

[28] **LIFT** the SWB lid above the SWB and center the SWB lid over the SWB body shell flange.

5.3 Unloading SWBs (continued)

WARNING

Pinch points will be present between the lid and the body shell flange. Keep hands and fingers clear during lid installation to prevent injury.

[29] **SLOWLY LOWER** the SWB lid onto the SWB body shell flange ensuring that the gasket is not damaged during the lowering of the SWB lid.

[30] **INSTALL** and **HAND TIGHTEN** the SFHCSs in any order.

[31] **TIGHTEN** all of the SFHCSs with a wrench or ratchet.

[32] **REMOVE** the lid lift rigging and hoist ring as required.

[33] **CLEAN** the entire box with Fantastik® cleaner or equivalent.

[34] **ENSURE** that WCATS has been updated with the waste container configuration information, as applicable.

5.4 Loading SWBs

This section is a stand-alone section and may be performed independently of, or in conjunction with, other Performance sections.

NOTE *The overpack (e.g., 412-PACK) or consolidation (e.g., CONSOLID) task on the WCATS desktop application may be performed in conjunction with the performance of the loading of an SWB.*

Supervisor or Waste Handling Operator

[1] **ENSURE** that the prerequisite actions are completed.

Waste Handling Operator

[2] **IF** radiological contamination is detected during evolution,
THEN FOLLOW the direction of the RCT and RWP.

[3] **ENSURE** that the items (e.g., drums or debris) to be loaded into an SWB have been staged in an area designated for loading.

5.4 Loading SWBs (continued)

[4] **OBTAIN** an SWB that has been prepared in accordance with Section 5.1, SWB Preparation.

[5] **IF** the SWB is CLOSED,
THEN OPEN the SWB in accordance with Section 5.2, Opening SWBs.

[6] **ENSURE** that the appropriate PPE has been donned in accordance with applicable procedures, RWPs, and specific facility requirements.

[7] **ENSURE** that a TRU DRUM PREPARATION task has been completed for the SWB using a WCATS mobile device and that the Shorty barcode labels have been applied to the SWB.

[8] **IF** drums are being loaded into the SWB,
THEN:

[A] **RECORD** the following information for the drums to be loaded or drums already in the SWB, as applicable, on Attachment 2, TA-54 Area G Standard Waste Box (SWB) Loading Data Sheet:

- SWB Unique Identifier
- Unique identifier of the Individual Drums
- Individual Drums vent (e.g., filtered vent or unfiltered vent) make (manufacturer) and model number, as applicable
- PE-Ci Value (0 PE-Ci for dunnage) of the Individual Drums
- Description of any unusual item condition such as that the item is wrapped in plastic
- FGE Value of the Individual Drums
- Reason for overpacking drums

[B] **SUM** the Individual Drum PE-Ci Values and Individual Drum FGE Values, and **RECORD** the Total Proposed SWB PE-Ci Value and Total Proposed SWB FGE Value for the SWB on Attachment 2.

CS [C] **(*) DETERMINE** whether the Total Proposed SWB FGE Value is less than or equal to 325 FGE, and **CHECK** (√) SAT or UNSAT on Attachment 2. (NCS-CSLA-13-064)

5.4 Loading SWBs (continued)

[D] **IF** the Total Proposed SWB FGE Value is greater than 325 FGE,
THEN:

[a] **STOP** the work activity.

[b] **NOTIFY** supervision of the discrepancy, and **REQUEST** the applicable actions.

[E] **IF** the SWB is being direct loaded for shipment to WIPP,
THEN:

[a] **DETERMINE** whether the Total Proposed SWB PE-Ci Value satisfies the following applicable limit, and **CHECK** (√) SAT or UNSAT on Attachment 2.

- Solidified/vitrified waste - ≤ 1,800 PE-Ci
- Other than solidified/vitrified waste - ≤ 560 PE-Ci

[b] **IF** the Total Proposed SWB PE-Ci Value is greater than 560 PE-Ci or 1,800 PE-Ci, as applicable,
THEN STOP the work activity and **REQUEST** the applicable actions.

NOTE *LCO 3.1.7 is <u>not</u> applicable to cemented or vitrified waste forms in accordance within the NOTE of LCO 3.1.7. However, cemented and vitrified waste forms will be treated conservatively and not exempted from the requirements of LCO 3.1.7.*

[F] **($) IF** a drum being loaded contains greater than or equal to 200 PE-Ci,
AND the container or activity does **NOT** satisfy <u>one</u> of the following criterion,

- Is a POC
- Is being temporarily removed from a DOUBLEPACK during repackaging or characterization (e.g., NDE/NDA)
- Performing SSSR activities

THEN PERFORM a DOUBLEPACK inspection of the drum containing greater than or equal to 200 PE-Ci in accordance with Section 7, Doublepack Inspection, and **GO** to the following step. (LCO 3.1.7)

5.4 Loading SWBs (continued)

[9] **IF** loading an UNVENTED TRU WASTE DRUM into an SWB,
THEN:

[A] **($) ENSURE** that the appropriate size drum lid restraint has been obtained and visually inspected for the following applicable criteria, and **CHECK** (√) SAT or UNSAT on Attachment 9: (SR 4.4.2.1)

- Degradation (e.g., no indication of cracked parts, missing fasteners, loose or frayed parts, excessive wear, or unusual deformation)
- Missing or illegible identification
- Melting or charring
- Broken or worn stitching in load bearing splices
- Knots in any part of the drum lid restraint
- Discoloration and brittle or stiff areas

[B] **IF** the visual inspection of a drum lid restraint is unsatisfactory,
THEN:

[a] **SEGREGATE** the unsatisfactory drum lid restraint from the other restraints, and **IDENTIFY** the restraint as unusable.

[b] **GO** to Step 5.4[9][A].

NOTE *The drum lid restraint should be tight enough around the drum so that the ratchet strap does not slide over the lip, and that at least two full wraps of the strap are around the ratchet barrel.*

[C] **ENSURE** that a drum lid restraint is installed below a lip (e.g., the first drum rolling hoop from the lid or drum locking ring) of each UNVENTED TRU WASTE DRUM ensuring that a minimum of two full wraps of the strapping is around the ratchet barrel.

NOTE *Checking SAT for drum lid restraint installation indicates that all the drum lid restraints have been installed in a satisfactory manner, except as may be indicated in the comments section of Attachment 2.*

[D] **($) VERIFY** that the UNVENTED TRU WASTE DRUM has a drum lid restraint installed, and **CHECK** (√) SAT or UNSAT on Attachment 2. (SR 4.4.2.1)

5.4 Loading SWBs (continued)

NOTE *Each SWB will be loaded with OVERPACK drums lain on their sides.*

[10] **IF** loading an SWB with a forklift,
THEN ENSURE that a spreader bar or equivalent is properly attached and secured on a forklift.

[11] **ATTACH** the item lift fixture (sling or drum handler as appropriate) to the bottom of the spreader bar or equivalent or gantry crane.

[12] **ATTACH** the item lift fixture to the item.

[13] **IF** a radiological contamination barrier (e.g., tape or plastic) has been attached to the item to be loaded into the SWB,
THEN ENSURE that the contamination barrier is protected from tearing (e.g., a rubber pad is placed between the point where the lift fixture contacts the drum) as directed by an RCT and RWP, as applicable.

[14] **SLOWLY RAISE** the lift fixture until the item lift fixture becomes tight.

WARNING

Severe personnel injury or death can occur from placing parts of the body beneath a suspended load. At no time is an individual permitted to place any portion of their body beneath a suspended load.

[15] **($) SLOWLY RAISE** the item, ensuring that a spotter is present for lifts planned to exceed 4 ft above the ground surface and a critical lift plan is established for lifts planned to exceed 12 ft above the ground surface. (SAC 5.7.8)

[16] **WHEN** the item is just above the sides of the SWB,
THEN STOP raising the item.

[17] **MANEUVER** the item as necessary to position the item over the SWB.

[18] **SLOWLY LOWER** the item into the SWB.

[19] **WHEN** the item reaches the bottom of the SWB,
THEN LOWER the lift fixture until the lift fixture becomes slack enough to remove the lift fixture.

[20] **DETACH** the item lift fixture from the item.

5.4 Loading SWBs (continued)

NOTE *The lid restraint on UNVENTED TRU WASTE DRUMS loaded horizontally in an SWB are to be left on the UNVENTED TRU WASTE DRUMS in order to permit the removal of the UNVENTED TRU WASTE DRUMS.*

[21] **IF** loading drums,
AND the drum is to be loaded horizontally in the SWB (e.g., 85-gal OVERPACK drum),
THEN:

[A] **POSITION** one cinch strap around the drum, near the top.

[B] **IF** loading an SWB with a forklift,
THEN:

[a] **ENSURE** that a spreader bar or equivalent has been attached and secured on the forklift.

[b] **POSITION** the forklift as necessary.

[C] **SECURE** the cinch strap to the hook on the spreader bar or equivalent or gantry crane.

[D] **SLOWLY RAISE** the cinch strap until the cinch strap becomes tight.

WARNING

Pinch points exist during drum loading evolutions. Keep hands and fingers clear during drum loading evolutions to prevent injury. Lower the drum back into the SWB before making adjustments to the cinch straps.

[E] **($) SLOWLY LIFT** the drum to allow the drum to be maneuvered ensuring that a spotter is present for lifts planned to exceed 4 ft above the ground surface and a critical lift plan is established for lifts planned to exceed 12 ft above the ground surface. (SAC 5.7.8)

[F] **MANEUVER** the drum and cinch strap as necessary to **LOWER** the drum horizontally inside the SWB.

[G] **LOWER** the drum, and **REMOVE** the cinch strap from the spreader bar or equivalent or gantry crane.

5.4 Loading SWBs (continued)

[22] **IF** loading additional items into an SWB,
THEN REPEAT Steps 5.4[9] through 5.4[21] as necessary to load the additional items.

NOTE *The overpack (e.g., 412-PACK) or consolidation (e.g., CONSOLID) task on the WCATS desktop application may be performed in conjunction with the performance of the loading of an SWB.*

[23] **ENSURE** that a new PROCESS task (SELECT File > Task > Process) to overpack (e.g., 412-PACK or CONSOLID) has been completed for the SWB using the WCATS desktop application.

NOTE *The following two steps may be performed in any order or concurrently to permit the closing of each SWB after it has been loaded.*

[24] **REPEAT** Steps 5.5[2] through 5.5[23] for each SWB to be loaded.

[25] **CLOSE** the SWB in accordance with Section 5.5, SWB Closure.

5.5 SWB Closure

This section is a stand-alone section and may be performed independently of, or in conjunction with, other Performance sections.

Supervisor or Waste Handling Operator

[1] **ENSURE** that the prerequisite actions are completed.

Waste Handling Operator

[2] **IF** radiological contamination is detected during evolution,
THEN FOLLOW the direction of the RCT and RWP.

[3] **RECORD** the SWB serial number on Attachment 3, TA-54 Area G Standard Waste Box (SWB) Closure Data Sheet.

[4] **ENSURE** that the drums or package within the SWB are adequately braced, as required, and supported to prevent movement inside the SWB, if required.

[5] **ENSURE** that dunnage drums have been loaded into the SWB, as necessary, in accordance with Section 5.4, Loading SWBs, if required.

5.5 SWB Closure (continued)

[6] **IF** the SWB has been previously loaded (used),
THEN:

[A] **MANUALLY REMOVE** the SWB lid gasket by stripping the SWB lid gasket from the SWB body flange.

WARNING

Cutting tools are very sharp and cut resistant gloves (e.g., leather gloves) are to be worn when using/handling cutting tools to prevent severe personnel injury.

[B] **REMOVE** any residual gasket components or adhesive, using a flexible spatula, putty knife, or similar tool.

[C] **IF** a stripped SFHCS is encountered,
THEN:

[a] **IF** a portion of the SFHCS is in the rivnut®,
THEN REMOVE the remaining portion of the SFHCS (e.g., channel locks holding the rivnut® and unscrew the SFHCS) or **CUT** the rivnut® flush with the SWB sealing surface.

[b] **IF** a portion of the rivnut® shoulder remains above the SWB sealing surface,
THEN:

1. **SCORE** the stripped rivnut® using a scoring tool (e.g., dike or chisel) in several locations (e.g., three) around the upper flange of the rivnut®.

2. **CRIMP** the scored rivnut®.

[c] **FORCE** the rivnut® into the SWB sealing surface channel.

[d] **INSTALL** a new rivnut® using a Rivet Installation Header Tool or equivalent.

[D] **TAP** and **CLEAN** rivnut® threads, as necessary, by running a 1/2-in. 13 UNC thread tap through the rivnut®.

5.5 SWB Closure (continued)

[7] **OBTAIN** a new SWB lid gasket.

[8] **INSPECT** the SWB lid gasket for the following and **DOCUMENT** the results of the inspection on Attachment 3:

- Damage that would prevent the gasket from sealing
- SWB lid gasket expiration date

[9] **IF** the SWB lid gasket has exceeded the expiration date indicated on the SWB lid gasket packaging,
OR the SWB lid gasket is damaged,
THEN GO to Step 5.5[7].

WARNING

At no time is any individual permitted to place any portion of the body under a suspended load in order to prevent personnel injury.

[10] **WIPE** the gasket sealing surface of the SWB body and lid to remove loose debris.

5.5 SWB Closure (continued)

WARNING

Due to irritant and skin absorption hazard, nitrile gloves SHALL be worn when applying handling or applying adhesive remover.

CAUTION

Do not use acetone or other strong solvent, as paint/coating removal can occur.

[11] **APPLY** a light coat of low-intensity cleaning solvent to the SWB body flange, such as denatured alcohol, a general purpose adhesive remover containing a near-equal mixture of Naphtha and Xylene, or Fantastik®.

NOTE 1 *The gasket is supplied with the SWB or a vendor replacement kit as four parts (two curved parts and two straight parts). The holes in the gasket are pre-punched for installation on the body.*

NOTE 2 *Steps 5.5[12] through 5.5[16] may be performed repeatedly for each piece of gasket material.*

[12] **ENSURE** that the gasket holes match the SWB body holes, and that the mitered ends fit together properly before the installation.

[13] **REMOVE** the protective tape from the pressure-sensitive adhesive back of the gasket.

[14] **PLACE** each piece of the gasket assembly (adhesive-side down) on the corresponding SWB body frame location.

[15] **ENSURE** that the mitered gasket ends are interlocked.

[16] **PERFORM** minor adjustments to the gasket, as necessary, by trimming excess material.

[17] **IF** a gasket's gap exceeds 1/4 in.,
THEN:

[A] **DISCARD** the old SWB gasket.

5.5 SWB Closure (continued)

[B] **GO** to Step 5.5[7].

WARNING

Due to skin allergen hazard, nitrile, pylox, or trionic gloves SHALL be worn when applying Loctite®.

[18] **FILL** gasket gaps (less than or equal to 1/4 in. wide) using an RTV silicone gasket maker, such as Loctite® 598.

[19] **ENSURE** that the appropriate rigging equipment 1/4-20 UNC-2A X .29-in. long swivel hoist ring or two 6 in. x 9 in magnetic assemblies (150 lb capacity for a 1/8 in. thick lid) has been attached to the SWB lid.

[20] **IF** a 1/4-20 UNC-2A X .29-in. long swivel hoist ring was installed,
THEN ENSURE that the 1/4-20 UNC-2A X .29-in. long swivel hoist ring has been torqued to approximately 6 ft-lb (72 in-lb) ensuring that full thread engagement is achieved.

[21] **IF** installing the SWB lid with a forklift,
THEN:

[A] **ENSURE** that a 2 in. x 4 ft sling or equivalent (capacity greater than or equal to 200 lb) has been rigged to the magnetic assemblies or appropriate rigging equipment (e.g., swivel hoist ring), as required.

[B] **ENSURE** that a spreader bar or equivalent is properly placed and secured on the forklift.

[C] **SECURE** the slings to the hook on the bottom of the spreader bar or equivalent.

[D] **GO** to Step 5.5[23].

[22] **ENSURE** that the gantry crane hook or sling is attached to the SWB lid rigging equipment (e.g., swivel hoist ring).

[23] **SLOWLY LIFT** the SWB lid and **MOVE** the SWB lid to the SWB or roll the SWB under the lid as applicable.

5.5 SWB Closure (continued)

[24] **CENTER** the SWB lid over the SWB body shell flange.

WARNING

Pinch points will be present between the lid and the body shell flange. Keep hands and fingers clear during lid installation to prevent injury.

[25] **SLOWLY LOWER** the SWB lid onto the SWB body shell flange ensuring that the gasket is not damaged during the lowering of the SWB lid.

NOTE *The following step may be performed out of sequence.*

[26] **REMOVE** the SWB lid lift rigging and swivel hoist ring, as required.

WARNING

Due to skin allergen hazard, nitrile, pylox, or trionic gloves SHALL be worn when applying Loctite®.

NOTE *Steps 5.5[27] through 5.5[30] may be performed repeatedly for each socket flat head cap screw (*SFHCSs*).*

[27] **APPLY** a thread sealant (e.g., Loctite® 246) to the SFHCSs.

NOTE *The SFHCSs installation pattern illustrated on Appendix 2, Standard Waste Box Closure Socket Flat Head Cap Screw Installation Pattern, may be annotated on the SWB lid to facilitate the installation of the SWB lid. This annotation may be performed out of sequence.*

[28] **INSTALL** and **HAND TIGHTEN** SFHCSs A through D in the order illustrated on Appendix 2.

[29] **INSTALL** and **HAND TIGHTEN** SFHCSs E through L in the order illustrated on Appendix 2.

[30] **INSTALL** all remaining SFHCSs in any order.

5.5 SWB Closure (continued)

[31] **DOCUMENT** the torque wrench information on Attachment 3.

WARNING

Drilling evolutions can produce sharp edges and burrs. Wear leather gloves and safety glasses with side shields when drilling.

NOTE *The following step may be repeated as necessary during the completion of this section.*

[32] **IF** a stripped SFHCS is encountered while the SFHCSs are being torqued,
THEN:

[A] **REMOVE** (e.g., drill or hacksaw), as necessary.

[B] **REMOVE** the SFHCSs.

[C] **ATTACH** appropriate rigging equipment or two 6 in. x 9 in. magnetic assemblies (150 lb capacity for a 1/8 in. thick lid) to the SWB lid.

[D] **IF** removing the SWB lid with a forklift,
THEN:

[a] **RIG** a 2 in. x 4 ft sling or equivalent (capacity ≥ 200 lb) to the magnetic assemblies.

[b] **ENSURE** that a spreader bar or equivalent is properly attached and secured on the forklift.

[c] **SECURE** the sling to the hook on the bottom of the spreader bar or equivalent.

[E] **SLOWLY LIFT** and **MOVE** the SWB lid to a safe location.

NOTE *All of the SWB gasket may be removed because the entire SWB gasket is to be replaced during closure.*

[F] **REMOVE** the portion of the SWB gasket around the rivnut® to be repaired, as necessary.

5.5 SWB Closure (continued)

[G] **IF** a portion of the SFHCS is in the rivnut®,
THEN REMOVE the remaining portion of the SFHCS (e.g., channel locks holding the rivnut® and unscrew the SFHCS) or **CUT** the rivnut® flush with the SWB sealing surface.

[H] **IF** a portion of the rivnut® shoulder remains above the SWB sealing surface,
THEN:

[a] **SCORE** the stripped rivnut® using a scoring tool (e.g., dike or chisel) in several locations (e.g., three) around the upper flange of the rivnut®.

[b] **CRIMP** the scored rivnut®.

[I] **FORCE** the rivnut® into the SWB sealing surface channel.

[J] **INSTALL** a new rivnut® using a Rivet Installation Header Tool or equivalent.

[K] **ENSURE** that the SWB lid gasket has been removed by stripping the SWB lid gasket from the SWB body flange.

WARNING

Cutting tools are very sharp and cut resistant gloves (e.g., leather gloves) are to be worn when using/handling cutting tools to prevent severe personnel injury.

[L] **ENSURE** that any residual gasket components or adhesive has been removed, using a flexible spatula, putty knife, or similar tool.

5.5 SWB Closure (continued)

WARNING

Due to irritant and skin absorption hazard, nitrile gloves SHALL be worn when applying handling or applying adhesive remover.

CAUTION

Do not use acetone or other strong solvent, as paint/coating removal can occur.

[M] **APPLY** a light coat of low-intensity cleaning solvent to the SWB body flange, such as denatured alcohol, a general purpose adhesive remover containing a near-equal mixture of Naphtha and Xylene, or Fantastik®.

[N] **INSTALL** a new SWB gasket, and **RECORD** the SWB gasket expiration date in the Comments section of Attachment 3.

[O] **GO** to Step 5.5[22].

[33] **TORQUE** all SFHCSs to 30 ft-lb (30 to 40 ft-lb), in accordance with the sequence outlined on Appendix 2, and **DOCUMENT** torque values on Attachment 3.

[34] **TORQUE** all SFHCSs to 50 ft-lb (50 to 60 ft-lb) in accordance with the sequence outlined on Appendix 2, and **DOCUMENT** the torque value on Attachment 3.

5.5 SWB Closure (continued)

NOTE *LCO 3.1.7 is not applicable to cemented or vitrified waste forms in accordance within the NOTE of LCO 3.1.7. However, cemented and vitrified waste forms will be treated conservatively and not exempted from the requirements of LCO 3.1.7.*

[35] **IF** a TRU WASTE drum with greater than or equal to 200 PE-Ci was loaded into the SWB,
AND the TRU WASTE drum or activity does **NOT** satisfy one of the following criterion,
- Is a POC
- Is being temporarily removed from a DOUBLEPACK during repackaging or characterization (e.g., NDE/NDA)
- Performing SSSR activities

THEN:

[A] **($) PERFORM** a DOUBLEPACK inspection of the SWB in accordance with Section 7, and **GO** to the following step. (LCO 3.1.7)

[B] **($) CHECK** (√) SAT or UNSAT on Attachment 8 to indicate whether the requirements of a DOUBLEPACK are satisfied. [AC 5.6.11(2) and SR 4.1.7]

[C] **NOTIFY** supervision and the TA-54 Operations Center of the drum number and that the DOUBLEPACK requirements have been satisfied.

NOTE *The following step may performed be out of sequence or concurrently with other actions.*

[36] **CLEAN** the entire box with Fantastik® cleaner or equivalent.

5.5 SWB Closure (continued)

NOTE 1 *The weight of the internal waste drum or package should to be obtained from the TWSR in order to ensure that the correct drum weight is obtained, but the drum weight recorded on the lid of the internal waste drum may be used.*

NOTE 2 *Individual internal item weights may be omitted and only an approximate Total Internal Weight recorded for SWBs loaded with multiple items such as debris.*

[37] **IF** the SWB is **NOT** to be weighed,
THEN:

[A] **RECORD** the internal waste container or package weights on Attachment 3.

[B] **SUM** the weight of the internal waste containers or package, and **RECORD** the Total Internal Weight on Attachment 3.

[C] **SUM** the Total Internal Weight and the SWB Tare Weight (640 lb), and **RECORD** the SWB Gross Weight on Attachment 3.

[D] **GO** to Step 5.5[39].

NOTE *The following steps may be performed out of sequence.*

[38] **WEIGH** and **RECORD** the SWB Gross Weight (lb) on Attachment 3.

[39] **RECORD** the SWB Gross Weight (lb) on the SWB lid in approximately 1/2 in. lettering using a permanent marker, and **CHECK** (√) SAT or UNSAT on Attachment 3.

[40] **ENSURE** that the SWB has been labeled in accordance with EP-DIV-DOP-20043, LTP TRU Waste Container Labeling, as required.

[41] **NOTIFY** the Waste Management – Services (WM-SVS) group to prepare a TWSR for the SWB, <u>or</u> **INITIATE** a TWSR in WCATS.

[42] **REQUEST** an RCT perform a radiological survey of the SWB, as required.

[43] **ATTACH** the original Attachment 3 to the SWB <u>or</u> **ENSURE** that Attachment 3 is forwarded to the applicable supervisor.

5.5 SWB Closure (continued)

[44] **IF** containers/items or package were loaded into an SWB,
AND a new TWSR was **NOT** generated,
THEN ENSURE that a TRU Waste Storage Record Change Form (Form 2177) is initiated or **UPLOAD** the information into WCATS.

NOTE *The following step may be performed out of sequence.*

[45] **ENSURE** that the RECEIVING CONTAINER information (e.g., container closure date, time, and other requested information) has been updated in the WCATS desktop application.

6. PERFORMANCE—DRUM (55-, 85-, OR 110-GAL) OPERATIONS

NOTE *Radiological surveys may be performed as determined necessary [e.g., by an RP representative (e.g., RCT)] any time during the performance of this procedure.*

6.1 Drum Preparation

This section is a stand-alone section and may be performed independently of, or in conjunction with, other Performance sections.

NOTE 1 *This section is applicable to the preparation of 55-, 85-, and 110-gal drums.*

NOTE 2 *In order to open an empty used overpack drum, the removable contamination values on the interior drum must be documented to be less than the values listed in Table 14-2, Surface Contamination Values, of P121 or otherwise the overpack drum must be opened within a contamination control enclosure.*

NOTE 3 *The TRU DRUM PREPARATION task on the WCATS mobile device or desktop application may be performed in conjunction with the performance of the physical build of a drum.*

Supervisor or Waste Handling Operator

[1] **ENSURE** that the prerequisite actions are completed.

Waste Handling Operator

[2] **OBTAIN** a DOT Type 7A certified drum and lid assembly.

[3] **RECORD** the following drum information on Attachment 4, TA-54 Area G Drum Preparation Data Sheet.
- Purchase Order Number
- Lot Number
- Manufacture Date

NOTE *Self-tapping filtered vents may be retained for later reinstallation.*

[4] **ENSURE** that the 3/4 in. bung or existing filtered vent has been removed from the drum lid, and **DISCARD** the filtered vent.

[5] **ENSURE** that the drum lid has been removed.

6.1 Drum Preparation (continued)

[6] **($) ENSURE** that the drum, lid, gasket, closure ring, bolt and nut, chine, rolling hoops, and paint have been inspected for holes or other damage that may impact the integrity of the drum using the following criteria: [AC 5.6.11(2)]

- No obvious signs of degradation (i.e., no clearly visible and potentially significant defects)
- No evidence that container has been, pressurized (i.e., no expansion of sidewalls, bottom, or top, and no warping)
- No potentially significant rust or corrosion such that wall thinning, pinholes, or breaches are likely or load bearing capacity is suspect (i.e., no caked layers or deposits of rust and no rust present in the form of deep metal flaking or built-up areas of corrosion products)
- No split seams, tears, obvious holes, punctures (of any size), creases, broken welds or cracks (i.e., no obvious leaks, holes or openings, cracks, deep crevices, creases, tears, broken welds, sharp edges or pits, are either breached or on the verge of being breached)
- No fastener or locking ring damage or excessive corrosion
- No dents, scrapes, or scratches that make container's structural integrity questionable or prevent top and bottom surfaces from being parallel (i.e., no deep gouges, scratches, or abrasions over wide areas, top and bottom surfaces <u>not</u> parallel, or large-deep dents)
- No discoloration indicating leakage or other evidence of leakage from container (i.e., no evidence of leakage at penetrations, welds, seams, or intersections of one or more metal sheets or plates)
- Container is <u>not</u> bulged (i.e., no expansion of sidewalls, bottom, or top, no protrusion of the side wall beyond a line connecting the peaks of the surrounding rolling hoops or bottom/top ring, or no deformation of the rolling hoop)
- Container is not combustible

[7] **IF** the drum or drum components fail the visual inspection,
THEN:

[A] **IDENTIFY** (e.g., tag or mark) the failed item to indicate that the item is defective.

[B] **SEGREGATE** defective item to prevent re-use.

[C] **NOTIFY** supervision of the discrepancy.

6.1 Drum Preparation (continued)

NOTE 1 *A QA representative may be contacted for assistance with the NCR process.*

NOTE 2 *The NCR may be initiated at an operationally convenient time.*

Supervisor

[D] **ENSURE** that an NCR is initiated in accordance with P330-6, as required.

Waste Handling Operator

[E] **GO** to Step 6.1[2].

[8] **RECORD** the torque wrench and WIPP-approved filtered vent information on Attachment 4.

NOTE *Appendix 3, Nuclear Filter Technology Filtered Vent Seals, illustrates the Skolnik drum Rieke VG1 and VG2 filter configuration.*

[9] **ENSURE** that a WIPP-approved filtered vent to be installed in the drum is equipped with the appropriate seal (gasket or O-ring) as follows:

- Skolnik drum with a Rieke VG1 3/4 in. bung base – Flat, Neoprene Seal
- Skolnik drum with a Rieke VG2 3/4 in. bung base – O-ring Seal

WARNING

Due to skin allergen hazard, nitrile, pylox, or trionic gloves SHALL be worn when applying Loctite®.

[10] **APPLY** a thread-locker (e.g., Loctite® 271 or Loctite® 680) to the first three threads of a WIPP-approved filtered vent.

[11] **HAND SCREW** the WIPP-approved filtered vent into the 3/4 in. bung hole.

[12] **TORQUE** the WIPP-approved filtered vent to a nominal value of 120 in-lb (96 to 144 in-lb), and **DOCUMENT** the WIPP-approved filtered vent torque value on Attachment 4.

6.1 Drum Preparation (continued)

[13] **IF** stripped WIPP-approved filtered vent threads are encountered, **THEN:**

[A] **ENSURE** that the drum lid has been removed.

[B] **IDENTIFY** (e.g., tag or mark) the drum lid indicating that the drum lid is defective.

[C] **SEGREGATE** the drum lid to prevent reuse.

[D] **NOTIFY** supervision of the discrepancy.

NOTE 1 *A QA representative may be contacted for assistance with the NCR process.*

NOTE 2 *The NCR may be initiated at an operationally convenient time.*

Supervisor

[E] **ENSURE** that an NCR is initiated in accordance with P330-6, as required.

Waste Handling Operator

[F] **OBTAIN** a new drum lid.

[G] **GO** to Step 6.1[6].

[14] **PLACE** the drum lid and drum closure ring on the drum, and **TIGHTEN** the closure ring bolt sufficiently to hold the drum lid in place.

6.1 Drum Preparation (continued)

[15] **IF** the drum lid is equipped with a 2-inch bung,
THEN:

[A] **LOOSEN** and **HAND-TIGHTEN** the 2-inch bung.

[B] **TORQUE** the 2-inch bung in accordance with Table 1, 2-in. Bung Torque Specifications, and **DOCUMENT** the torque value on Attachment 4.

TABLE 1, 2-in. BUNG TORQUE SPECIFICATIONS

Myers									
	Type I – Tri-Sure Octagon Base, Round Head Plug inserted in Tri-Sure Flange						Type II – Rieke Serrated Base, Hexagon Head Plug		
Plug Mat'l	Steel	Steel	Poly	Poly	Poly/Nylon	Poly/Nylon	Steel	Steel	Nylon
Gasket Mat'l	Buna-N and EPDM	Poly	None (Integral)	Buna-N and EPDM	Poly	Buna-N and EPDM	Buna-N and EPT	Poly	Poly and EPT
2"	20 ft-lb	30 ft-lb	12 ft-lb	15 ft-lb	30 ft-lb	20 ft-lb	30 ft-lb	40 ft-lb	20 ft-lb

Skolnik							
Plug Type	Tri-Sure			Rieke (plastic)	Rieke (steel)		Nuc-Fil Filters
Gasket Mat'l	Buna	Poly or Teflon	PE/PP (composite drums)	---	Poly	All others	
2"	20 ft-lb	30 ft-lb	10 ft-lb	20 ft-lb	40 ft-lb	30 ft-lb	---

[16] **ATTACH** the original Attachment 4 to the drum <u>or</u> **ENSURE** that Attachment 4 is forwarded to the applicable supervisor.

NOTE 1 *The TRU DRUM PREPARATION task on the WCATS mobile device may be performed out of sequence.*

NOTE 2 *The following step may be performed at a later time when the prepared drum is to be loaded.*

[17] **IF** the prepared drum is to be labeled,
THEN:

[A] **ENSURE** that a TRU DRUM PREPARATION task has been completed for the drum using a WCATS mobile device.

[B] **ATTACH** one drum identification (ID) barcode label (Shorty label) to the left of the drum seam approximately 6 in. from the drum bottom.

6.1 Drum Preparation (continued)

[C] **ATTACH** one drum ID barcode label (Shorty label) to the center of the drum lid.

[D] **ATTACH** three drum ID barcode labels (Shorty labels) approximately 6 in. from the bottom of the drum, one immediately adjacent to the drum seam and the other two approximately 120° apart.

6.2 Opening Overpack Drums (e.g., Pipe Overpack Container (POC), 85- or 110-gal)

This section is a stand-alone section and may be performed independently of, or in conjunction with, other Performance sections. This section cannot be used to open waste containers with direct loaded waste.

WARNING

Opening previously loaded drums (used) is to be performed in an RP-approved location in order to reduce the potential for radiological contamination.

NOTE *This section is only applicable to the opening of 85- and 110-gal drums, and Pipe Overpack Containers (POC).*

Supervisor or Waste Handling Operator

[1] **ENSURE** that the prerequisite actions are completed.

NOTE *The RCT may perform a radiological survey of the drum bottom, using a long-handled tool, while the drum is suspended.*

Waste Handling Operator

[2] **IMPLEMENT** radiological contamination control methods as directed by an RCT and RWP (e.g., drum hood)

[3] **IF** radiological contamination levels exceed the RWP during evolution or as directed by the RCT,
THEN FOLLOW the direction of the RCT and RWP.

6.2 Opening Overpack Drums (e.g., Pipe Overpack Container (POC), 85- or 110-gal) (continued)

NOTE *LCO 3.1.7 is not applicable to cemented or vitrified waste forms in accordance within the NOTE of LCO 3.1.7. However, cemented and vitrified waste forms will be treated conservatively and not exempted from the requirements of LCO 3.1.7.*

[4] **($) IF** the internal TRU WASTE drum contains greater than or equal to 200 PE-Ci, **AND** the internal TRU WASTE drum or activity does **NOT** satisfy one of the following criterion,

- Is a POC
- Is being temporarily removed from a DOUBLEPACK during repackaging or characterization (e.g., NDE/NDA)
- Performing SSSR activities

THEN NOTIFY the TA-54 Operations Center of the drum number and of the potential need to enter the applicable action statement of LCO 3.1.7 in accordance with EP-DIV-AP-13, WDP TSR-Related Operational Limits Actions Compliance Tracking.

WARNING

Drum lids with self-tapping filtered vents installed are to be handled in a way that prevents contact with the sharp point of the self-tapping filtered vent in order to prevent personnel injury due to cuts or punctures.

[5] **IF** self-tapping filtered vents (e.g., NucFil-7DS or NucFil-08DS) are installed in the drum lid,
THEN:

[A] **PREPARE** the top of the lid with plastic as directed by supervision and RCT.

[B] **REMOVE** the self-tapping filtered vents from the drum lid.

NOTE *The following step applies to overpack drums that are considered waste and will not be reused for overpacking TRU waste.*

6.2 Opening Overpack Drums (e.g., Pipe Overpack Container (POC), 85- or 110-gal) (continued)

[C] **IF** the OVERPACK drum is **NOT** to be used to overpack TRU waste,
AND directed by supervision to close the drum lid hole,
THEN PERFORM one of the following as directed by supervision:

[a] **SEAL** the vent hole opening as directed by an RCT (e.g., RTV or RP-approved tape).

[b] **INSTALL** the previously removed self-tapping filtered vent and **SEAL** the self-tapping filtered vent to the drum lid surface with RTV-732 sealant or equivalent; and after the sealant has set **APPLY** an additional RTV-732 sealant or equivalent between the filtered vent and the container surface, completely covering the gasket, but not the vent holes.

[D] **IF** the OVERPACK drum is to be used to overpack TRU waste,
AND directed by supervision to install a WIPP-approved filtered vent,
THEN:

[a] **INSTALL** a WIPP-approved Short Shaft/Sample Port filtered vent (e.g., NucFil-072S) into the OVERPACK drum lid hole.

[b] **APPLY** RTV-732 sealant or equivalent around the filtered vent ensuring vent holes are not obstructed.

NOTE 1 *55-gal suspect drums overpacked in both an 85-gal and 110-gal OVERPACK drum may be removed from both OVERPACK drums without removing the 85-gal OVERPACK drum from the 110-gal OVERPACK drum.*

[6] **LOOSEN** and **REMOVE** the drum closure ring.

[7] **SLIGHTLY LIFT** the drum lid enough to allow an RCT to perform a radiological survey of the underside of the drum lid.

RCT

[8] **PERFORM** a radiological survey of the underside of the drum lid, as required.

6.2 Opening Overpack Drums (e.g., Pipe Overpack Container (POC), 85- or 110-gal) (continued)

Waste Handling Operator

[9] **IF** the radiological survey indicates radiological levels exceeding the RWP or at the direction of the RCT,
THEN:

[A] **PLACE** the drum lid on the drum.

[B] **PLACE** the closure ring on the drum, and **TIGHTEN** the drum closure ring sufficiently to hold the drum lid in place.

[C] **NOTIFY** supervision and the TA-54 Operations Center of the condition and **REQUEST** the applicable actions.

[D] **EXIT** this procedure.

[10] **REMOVE** the drum lid.

[11] **IF** opening a POC drum for sampling,
THEN:

[A] **REMOVE** the spacers.

[B] **IF** the radiological survey indicates radiological levels exceeding the RWP or at the direction of the RCT,
THEN:

[a] **PLACE** the drum lid on the drum.

[b] **PLACE** the closure ring on the drum, and **TIGHTEN** the drum closure ring sufficiently to hold the drum lid in place.

[c] **NOTIFY** supervision and the TA-54 Operations Center of the condition and **REQUEST** the applicable actions.

[d] **EXIT** this procedure.

6.2 Opening Overpack Drums (e.g., Pipe Overpack Container (POC), 85- or 110-gal) (continued)

[C] **PLACE** spacers in a safe location away from the drum.

[D] **REMOVE** the fiberboard liner top to allow for radiological survey.

[E] **IF** the radiological survey indicates radiological levels exceeding the RWP or at the direction of the RCT,
THEN:

[a] **PLACE** spacer and then the drum lid on the drum.

[b] **PLACE** the closure ring on the drum, and **TIGHTEN** the drum closure ring sufficiently to hold the drum lid in place.

[c] **NOTIFY** supervision and the TA-54 Operations Center of the condition and **REQUEST** the applicable actions.

[d] **EXIT** this procedure.

[F] **PLACE** the fiberboard packing top (i.e., lid) in a designated location away from the drum.

[G] **NOTIFY** CCP to conduct sampling.

[H] **GO** to Section 6.6 Drum Closure.

[12] **($) IF** the internal drum is a 55- or 85-gal drum with an obstructed vent opening (e.g., obstructed WIPP-approved filtered vent <u>or</u> bung hole with bung installed)
THEN: (LCO 3.4.1)

[A] **STOP** non-essential activities within 15 ft of the UNVENTED TRU WASTE DRUM.

6.2 Opening Overpack Drums (e.g., Pipe Overpack Container (POC), 85- or 110-gal) (continued)

[B] **NOTIFY** the TA-54 Operations Center of the drum number and of the requirement to ensure that the applicable action statement of LCO 3.4.1 has been entered in accordance with EP-DIV-AP-13.

[C] **WHEN** instructed by the TA-54 Operations Center to proceed,
THEN CLOSE the drum in accordance with Section 6.6, Drum Closure, and **RETURN** to the following step.

[D] **NOTIFY** the TA-54 Operations Center that the drum has been properly closed.

[13] **IF** the internal drum is wrapped with plastic and tape and possesses a WIPP-approved filter,
THEN:

[A] **CUT** an area of the plastic and tape approximately a half inch around the inner drum filter to expose the drum filter using a utility knife.

[B] **VISUALLY INSPECT** the drum filter to verify filter is not obstructed.

[a] **IF** the filter is obstructed,
THEN:

1. **PLACE** the drum lid on the drum.

2. **PLACE** the closure ring on the drum, and **TIGHTEN** the drum closure ring sufficiently to hold the drum lid in place.

3. **NOTIFY** supervision of the drum condition.

Supervisor

4. **NOTIFY** the LTP Operations Manager or designee and the TA-54 Operations Center of the drum number and that the drum is an unvented waste container, and of the requirement to enter the actions of 3.5, as applicable, in accordance with EP-DIV-AP-13.

6.2 Opening Overpack Drums (e.g., Pipe Overpack Container (POC), 85- or 110-gal) (continued)

Waste Handling Operator

5. **WHEN** instructed by the TA-54 Operations Center to proceed, **THEN CLOSE** the drum in accordance with Section 6.6, Drum Closure, and **RETURN** to the following step.

6. **NOTIFY** the TA-54 Operations Center that the drum has been properly closed.

[C] **SEAL** the area around the filter with tape to seal plastic liner to inner drum lid leaving drum filter exposed.

Waste Handling Operator

[14] **IF** radiological contamination levels exceed the RWP limits or as directed by an RCT, **THEN FOLLOW** the direction of the RCT and RWP.

NOTE *A flashlight may be utilized to facilitate the following inspection.*

[15] **($) VISUALLY INSPECT** the interior of the drums for abnormalities (e.g., free liquids) and the integrity of the visible portions of the waste container. [AC 5.6.11(2)]

[16] **IF** any of the following conditions exist on the internal drum that would prevent the internal drum from being removed:

- Evidence of excessive bubbling, flaking, or pitting
- Cracked drum closure ring
- Missing drum closure ring bolt
- Bulging or rounded

THEN:

[A] **PLACE** the drum lid on the drum.

[B] **PLACE** the closure ring on the drum, and **TIGHTEN** the drum closure ring sufficiently to hold the drum lid in place.

6.2 Opening Overpack Drums (e.g., Pipe Overpack Container (POC), 85- or 110-gal) (continued)

[C] **STOP** all work activities.

[D] **NOTIFY** supervision and the TA-54 Operations Center of the condition, and **REQUEST** the applicable actions.

NOTE 1 *A QA representative may be contacted for assistance with the NCR process.*

NOTE 2 *The NCR may be initiated at an operationally convenient time.*

[E] **ENSURE** that an NCR is initiated in accordance with P330-6, as required.

Waste Handling Operator

[F] **IDENTIFY** (label or mark) the drum.

[G] **SEGREGATE** the drum for future processing.

[H] **EXIT** this procedure.

WARNING

The following step may <u>not</u> be used to replace an obstructed or missing filtered vent in an UNVENTED TRU WASTE DRUM in order to prevent a possible deflagration that could result in personnel injuries.

[17] **IF** the drum lid was removed to replace a filter in the internal drum lid, **THEN:**

[A] **INSTALL** a WIPP-approved Short Shaft/Sample Port filtered vent (e.g., NucFil-072S) into the 55-gal drum lid hole.

[B] **APPLY** RTV-732 sealant or equivalent around the filtered vent ensuring the vent holes are not obstructed.

[C] **IF** a WIPP-approved Short Shaft/Sample Port **CANNOT** be seated, **THEN SEAL** the WIPP-approved filtered vent to the drum lid surface with RTV-732 sealant or equivalent, and after the sealant has set **APPLY** an additional RTV-732 sealant or equivalent between the filtered vent and the container surface, completely covering the gasket, but <u>not</u> the vent holes.

6.2 Opening Overpack Drums (e.g., Pipe Overpack Container (POC), 85- or 110-gal) (continued)

[D] **DOCUMENT** installation of WIPP-approved filtered vent in the comments section of Attachment 6 to include Manufacturer, Model #, Serial Number, and Manufacture Date.

NOTE *A TRU Waste Storage Record (TWSR) Change Form (Form 2177) may be initiated at an operationally convenient time.*

[E] **COMPLETE** a TWSR Change Form (Form 2177) indicating the waste container filter replacement.

[F] **GO** to Section 6.3, Unloading Overpack Drums (e.g., 85- or 110-gal), or Section 6.6, Drum Closure, as applicable.

6.3 Unloading Overpack Drums (e.g., 85- or 110-gal)

This section is a stand-alone section and may be performed independently of, or in conjunction with, other Performance sections.

WARNING

Waste containers are to be removed from an OVERPACK in an RP-approved location in order to reduce the potential for radiological contamination.

NOTE *This section is only applicable to the unloading of 85- and 110-gal OVERPACK drums.*

Supervisor or Waste Handling Operator

[1] **ENSURE** that the prerequisite actions are completed.

[2] **ENSURE** that the OVERPACK drum has been opened in accordance with Section 6.2, Opening Overpack Drums (e.g., 85- or 110-gal).

[3] **IF** the internal drum is degraded or has a loss of integrity,
THEN PERFORM one of the following:

[A] **IMPLEMENT** radiological contamination control methods as directed by an RCT and RWP (e.g., drum hood).

6.3 Unloading Overpack Drums (e.g., 85- or 110-gal) (continued)

[B] **APPLY** a drum sleeve:

[a] **POSITION** the OVERPACK drum to be hoisted, as necessary.

[b] **POSITION** a drum sleeve with the bottom cut off (or equivalent confinement) around the outside of the OVERPACK drum.

[c] **ATTACH** one end of the drum sleeve to the top portion between the top chine and upper rolling hoop of the OVERPACK drum using an elastic band material or equivalent.

[d] **ENSURE** that the drum lift fixture is properly attached to lifting equipment (e.g. forklift or crane).

[e] **ATTACH** the drum lift fixture to the top of the internal drum.

[f] **SLOWLY RAISE** the drum lift fixture until it becomes tight.

[g] **WHEN** the internal drum has been raised above the lip of the OVERPACK drum enough to attach the drum sleeve,
THEN STOP raising the internal drum and **ATTACH** the drum sleeve to the internal drum below the internal drum upper chime.

[h] **SLOWLY RAISE** the internal drum until the top of the internal drum is approximately one foot out of the OVERPACK drum.

NOTE 1 *Based on radiological conditions and the condition of the internal drum, the bag sleeve may be left on the internal drum, as a layer of confinement and "pig tailed" at the bottom, except for drums to be transferred to the Waste Characterization, Reduction, and Repackaging Facility (WCRRF).*

NOTE 2 *Steps 6.3[3][B][i] and 6.3[3][B][j] are performed simultaneously in order to slowly raise the drum while lowering the bag sleeve.*

Waste Handling Operator and RCT

[i] **IF** the raised internal drum appears to be intact, and with concurrence from the RCT,
THEN SLOWLY LOWER the bag sleeve down the raised internal drum while performing a radiological survey, as necessary.

6.3 Unloading Overpack Drums (e.g., 85- or 110-gal) (continued)

[j] **($) SLOWLY RAISE** the internal drum out of the OVERPACK drum, while adjusting the drum sleeve, as necessary, and performing a radiological survey, ensuring that a spotter is present for lifts planned to exceed 4 ft above the ground surface and a critical lift plan is established for lifts planned to exceed 12 ft above the ground surface. (SAC 5.7.8)

[k] **GO** to Step 6.3[13].

WARNING

Loss of load and/or damage to the container from improper attachment of the drum lifting fixture could result in personal injury.

Waste Handling Operator

[4] **ENSURE** that the drum lift fixture is properly attached to lifting equipment (e.g. forklift, crane).

[5] **ATTACH** the drum lift fixture to the top of the internal drum.

[6] **ENSURE** that personnel are at a safe distance away from the elevated load (safe distance away equals the distance of the elevated load height).

[7] **SLOWLY RAISE** the drum lift fixture until it becomes tight.

WARNING

1. **Loss of load any time during the lifting evolution requires immediate STOP WORK, and NOTIFY supervision and the TA-54 Operations Center.**
2. **Pinch points are present when the lifting device is attaching to drum ring/lid. Keep hands clear of all lifting device contact areas.**

NOTE *Only qualified and trained personnel are authorized to operate hoists.*

[8] **SLOWLY RAISE** the internal drum until the <u>top</u> of the internal drum is approximately <u>one foot</u> out of the OVERPACK drum.

6.3 Unloading Overpack Drums (e.g., 85- or 110-gal) (continued)

[9] **VERIFY** the proper positioning of the drum attachment points (180 degrees apart on center) and that the load is suspended evenly on the lifting attachment (rigging cable/strap taunt and even on both sides).

[10] **IF** the drum attachment points are **NOT** properly secured or the load is **NOT** evenly distributed,
THEN:

[A] **LOWER** the drum.

[B] **RE-ADJUST** the lifting fixture as necessary.

[C] **GO** to Step 6.3[6].

[11] **IF** at any time during the hoisting of the internal container, the container is compromised (e.g., waste material release into overpack from internal container)
THEN:

[A] **IMMEDIATELY LOWER** the remainder of the internal drum carcass.

[B] **IF** the OVERPACK drum lid can be replaced,
THEN PLACE the lid and drum closure ring on the OVERPACK drum

[C] **IF** directed by supervision to close the OVERPACK drum,
THEN:

[a] **GO** to Section 6.6, Drum Closure.

[b] **DISPOSITION** the OVERPACK drum as directed by supervision.

[D] **SUSPEND** operations.

[E] **NOTIFY** supervision and TA-54 Operations Center.

[F] **EXIT** this procedure.

6.3 Unloading Overpack Drums (e.g., 85- or 110-gal) (continued)

WARNING

Personnel SHALL not place hands or arms or any portion of the body under the elevated load to prevent serious personal injury.

NOTE 1 *Only trained and qualified personnel authorized by the Supervisor or Operations Center may approach an elevated drum/rigid liner.*

NOTE 2 *The RCT **SHALL** survey the container as it is raised out of the OVERPACK drum, as necessary.*

[12] **($) SLOWLY RAISE** the internal drum out of the OVERPACK drum, while adjusting the drum sleeve, as necessary, and performing a radiological survey, ensuring that a spotter is present for lifts planned to exceed 4 ft above the ground surface and a critical lift plan is established for lifts planned to exceed 12 ft above the ground surface. (SAC 5.7.8)

WARNING

At no time is any individual permitted to place any portion of the body under a suspended load in order to prevent personnel injury.

Waste Handling Operator

[13] **WHEN** the internal drum has been elevated just above the opening of the OVERPACK drum,
THEN STOP raising the internal drum and **RELEASE** the drum sleeve from the OVERPACK drum, as applicable.

6.3 Unloading Overpack Drums (e.g., 85- or 110-gal) (continued)

WARNING

At no time is any individual permitted to place any portion of the body under a suspended load and OVERPACK drums are not to be moved out from under a suspended load using a foot or hand in order to prevent personnel injury.

[14] **REMOVE** the drum sleeve, as applicable, and the OVERPACK drum from under the suspended waste container, as necessary.

[15] **($) VISUALLY INSPECT** the bottom of the raised internal drum with an inspection mirror or equivalent. [AC 5.6.11(2)]

[16] **IF** any evidence of excessive bubbling, flaking, pitting, or leakage exists on the bottom of the internal drum that would prevent the internal drum from being further handled,
THEN:

[A] **SLOWLY LOWER** the internal drum into the OVERPACK drum, and **PLACE** the lid and drum closure ring on the OVERPACK drum.

[B] **IF** directed by supervision to close the overpack drum,
THEN:

[a] **GO** to Section 6.6, Drum Closure.

[b] **DISPOSITION** the OVERPACK drum as directed by supervision.

[C] **SUSPEND** all work activities.

NOTE 1 *A QA representative may be contacted for assistance with the NCR process.*

NOTE 2 *The NCR may be initiated at an operationally convenient time.*

Supervisor

[D] **ENSURE** that an NCR is initiated in accordance with P330-6, as required.

6.3 Unloading Overpack Drums (e.g., 85- or 110-gal) (continued)

Waste Handling Operator

[E] **IDENTIFY** (label or mark) the drum.

[F] **SEGREGATE** the OVERPACK drum for future processing.

[G] **NOTIFY** supervision and the TA-54 Operations Center of the drum condition, and **REQUEST** further guidance.

[17] **IF** the internal drum is a degraded or loss of integrity drum that can be safely handled, **AND** supervision has directed that a contamination control barrier (e.g. filtered bag) is to be applied to the internal drum,
THEN:

[A] **OBTAIN** the contamination control barrier (e.g., filtered bag) that is large enough to encase the internal drum.

[B] **IF** a filtered bag is to be used as the contamination control barrier,
AND the filtered bag has **NOT** been previously inspected,
THEN:

[a] **SEAL** the filtered bag filter with tape.

[b] **INSPECT** the filtered bag for damage or cuts by inflating the bag, sealing with hand, and visually examining, listening for leaking air, and feeling for indications of leaks.

[c] **IF** the filtered bag fails the inspection,
THEN DISCARD the filtered bag and **GO** to Step 6.3[17][A].

[d] **REMOVE** the tape from the filtered bag filter.

6.3 Unloading Overpack Drums (e.g., 85- or 110-gal) (continued)

WARNING

At no time is any individual permitted to place any portion of the body under a suspended load in order to prevent personnel injury.

NOTE *The height of the internal drum may be adjusted as necessary to permit placing the contamination control barrier (e.g., filtered bag) around the internal drum.*

[C] **SLIDE** the contamination control barrier (e.g., filtered bag) around the internal drum.

[D] **LOWER** the internal drum onto a stable surface (e.g., ground or drum dolly), as necessary.

[E] **IF** the internal drum is **NOT** to be hoisted,
THEN:

[a] **ENSURE** that the drum lift fixture has been removed from the internal drum.

[b] **CLOSE** the contamination control barrier (e.g., filtered bag) around the internal drum applying tape as necessary.

[F] **ENSURE** that the contamination control barrier (e.g., filtered bag) has been secured (e.g. tape or elastic band) to the upper portion of the internal drum.

NOTE *Tape is typically applied to the outside of the bottom of the drum contamination control barrier (e.g., filtered bag) for drums to be transferred to WCRRF in order to prevent the bottom of the contamination control barrier (e.g., filtered bag) from tearing.*

[G] **APPLY** additional tape over the contamination control barrier (e.g., filtered bag), as necessary.

6.3 Unloading Overpack Drums (e.g., 85- or 110-gal) (continued)

[H] **NOTIFY** supervision and the TA-54 Operations Center of the drum condition, and **REQUEST** further guidance.

WARNING

At no time is any individual permitted to place any portion of the body under a suspended load and OVERPACK drums are <u>not</u> to be moved out from under a suspended load using a foot or hand in order to prevent personnel injury.

[18] **IF** the internal drum is wrapped in plastic and free liquid is discovered in the liner **THEN:**

[A] **CUT** a slit in the bottom of the liner to allow liquid to flow into the OVERPACK container.

[B] **LOWER** the inner drum half way back into the OVERPACK drum and **ALLOW** approximately five minutes for liquid to drain out of the liner.

[C] **OBTAIN** a piece of plastic large enough to be placed in between the OVERPACK drum and the bottom of the inner drum.

[D] **PLACE** tape tabs on the four corner of the plastic.

[E] **PLACE** absorbent wipes on the top of the piece of plastic.

[F] **RAISE** the inner drum back to a position to clear the opening of the OVERPACK drum not to exceed 12 ft.

[G] **PICK-UP** and **POSITION** the plastic with absorbent material between the elevated inner drum and the OVERPACK drum.

NOTE *Next step will require two operator/handlers to position the plastic between the elevated inner drum and the OVERPACK drum.*

[H] **ATTACH** and **SECURE** the plastic piece with absorbent material to the sides of the inner drum using the tape tabs previously installed.

[19] **ENSURE** that the OVERPACK drum has been moved out from under the waste container.

6.3 Unloading Overpack Drums (e.g., 85- or 110-gal) (continued)

[20] **INSPECT** the condition of the inner drum.

NOTE *For drums that are to be transferred to WCRRF, rust inhibitor must be removed in accordance with Section 6.4, Waste Container Rust Inhibitor Removal.*

[21] **IF** an internal drum with rust inhibitor was removed from an OVERPACK drum,
AND the rust inhibitor is to be removed from the internal drum,
THEN GO to Section 6.4, Waste Container Rust Inhibitor Removal.

NOTE *A drum hood or other radiological contamination control may be used as directed by an RCT and RWP in order to create a lateral air movement across the drum.*

[22] **LOWER** the internal drum to a stable surface (e.g., ground or drum dolly) or into the SWB, as applicable.

[23] **IF** inner container is being placed into SWB for final disposition and is an empty (e.g., WCRRF campaigns X04 and X05) and the container information is **NOT** visible or available,
THEN:

[A] **DOCUMENT** no inner drum information available in the comments section on the applicable attachment.

[B] **GO** to Step 6.3[28].

[24] **DETERMINE** whether the 55-gal drum number matches the OVERPACK drum number.

[25] **IF** there is no drum number on the 55-gal drum,
THEN:

[A] **NOTIFY** supervision of the discrepancy.

6.3 Unloading Overpack Drums (e.g., 85- or 110-gal) (continued)

NOTE *Internal drums without a drum number may be assumed to be the expected drum unless there is information on the internal drum (e.g., labeling) that would indicate that internal drum is not the expected drum.*

Supervisor

[B] **DETERMINE** whether to continue to process the internal drum.

Waste Handling Operator

[C] **IF** the internal drum is **NOT** to be processed,
THEN:

[a] **PLACE** the 55-gal drum into an OVERPACK drum.

[b] **CLOSE** the OVERPACK drum in accordance with Section 6.6, Drum Closure, and **RETURN** to the following step.

[c] **NOTIFY** supervision of the discrepancy.

Supervisor

[d] **NOTIFY** the applicable Operations Manager or designee and the TA-54 Operations Center of the discrepancy.

NOTE 1 *A QA representative may be contacted for assistance with the NCR process.*

NOTE 2 *The NCR may be initiated at an operationally convenient time.*

[e] **ENSURE** that an NCR is initiated in accordance with P330-6, as required.

Waste Handling Operator

[f] **SEGREGATE** the OVERPACK drum for further processing.

[g] **PROCEED** as directed by supervision.

[26] **IF** the 55-gal and OVERPACK drum numbers do **NOT** match,
AND the internal drum has **NOT** been previously identified/evaluated,
THEN:

[A] **NOTIFY** supervision of the discrepancy.

6.3 Unloading Overpack Drums (e.g., 85- or 110-gal) (continued)

Supervisor

[B] **NOTIFY** the applicable Operations Manager or designee and the TA-54 Operations Center of the discrepancy.

NOTE 1 *A QA representative may be contacted for assistance with the NCR process.*

NOTE 2 *The NCR may be initiated at an operationally convenient time.*

[C] **ENSURE** that an NCR is initiated in accordance with P330-6, as required.

Waste Handling Operator

[D] **PLACE** the 55-gal drum in an OVERPACK drum.

[E] **CLOSE** the overpack drum in accordance with Section 6.6, Drum Closure, and **RETURN** to the following step.

[F] **SEGREGATE** the OVERPACK drum for future processing.

[G] **PROCEED** as directed by supervision.

[27] **IF** the internal drum and OVERPACK drum numbers do **NOT** match,
AND the internal drum has been previously identified/evaluated,
THEN:

[A] **NOTIFY** supervision of the discrepancy.

[B] **RECORD** the available internal drum information and requested OVERPACK waste container information on Attachment 7, TA-54 Area G Overpack Waste Container Labeling Discrepancy Data Sheet.

[C] **CREATE** a temporary unique identifier for the internal drum consisting of the location (e.g., 54-231 or 54-412), date (e.g., 07-19-12), and next sequential number (e.g., 1, 2, 3, or 4).

Example: 54-231-07-18-12-1, 54-412-07-20-12-5, or 54-231-07-18-12-2

6.3 Unloading Overpack Drums (e.g., 85- or 110-gal) (continued)

[D] **RECORD** the Temporary Unique Identifier number on Attachment 7 and on the internal drum using a permanent marker.

NOTE *UNVENTED TRU WASTE DRUMS and drums with a questionable integrity are to be overpacked into a compliant OVERPACK (e.g., SWB or 85-gal OVERPACK drum).*

[E] **REQUEST** that applicable actions to disposition the internal drum from supervision and the applicable Operations Manager.

[28] **REMOVE** the lifting fixture from the 55-gal drum.

[29] **DETERMINE** whether the OVERPACK drum is empty.

NOTE *The following step may be performed out of sequence or concurrently with the remaining steps of this procedure, depending on the availability of a sufficient number of operators and space.*

[30] **IF** an OVERPACK drum contains free liquid,
THEN:

[A] **SUSPEND** operations.

[B] **NOTIFY** the applicable Operations Manager for the for the applicable actions.

[31] **PLACE** the drum lid and closure ring on the empty OVERPACK drum.

[32] **REMOVE** or obliterate the old OVERPACK drum labels.

[33] **CONTACT** a WMC to obtain the applicable labels (e.g., item identification barcodes, empty labels, non-compactable waste label) for the empty OVERPACK drum.

[34] **COMPLETE** information on the non-compactable waste label, as applicable.

6.3 Unloading Overpack Drums (e.g., 85- or 110-gal) (continued)

NOTE *The information in the following step is filled in on the section requesting previous contents information on the Empty Label.*

[35] **DOCUMENT** the original parent drum number on the empty OVERPACK drum label.

[36] **OBTAIN** radioactive labels from the RCT.

[37] **LABEL** the empty OVERPACK drum.

NOTE *WCRRF will not accept waste containers with radiological contamination greater than the minimum detectable activity (MDA) of the survey instrument unless the radiological contamination is fixed.*

[38] **IF** removable radiological contamination below the task limits of the RWP is identified on the exterior of the internal drum,
AND the drum is to be transferred to WCRRF,
THEN:

[A] **RECORD** the waste container unique identifier number on Attachment 5, TA-54 Area G Unloaded 55-gal Drum Contamination/Radiation Data Sheet.

[B] **RECORD** the Pre-Decon Removable Radiological Contamination Level information on Attachment 5.

[C] **DECONTAMINATE** the internal drum in accordance with the direction of the RCT and associated RWP, and **DOCUMENT** the decontamination process and materials on Attachment 5.

[D] **IF** the removable radiological contamination **CANNOT** be decontaminated from the internal drum,
THEN NOTIFY supervision and the RCT for the applicable actions.

[E] **RECORD** the Post-Decon Removable and Total Radiological Values on Attachment 5.

6.3 Unloading Overpack Drums (e.g., 85- or 110-gal) (continued)

[39] **ENSURE** that WCATS has been updated with the waste container configuration information.

6.4 Waste Container Rust Inhibitor Removal

This section is a stand-alone section and may be performed independently of, or in conjunction with, other Performance sections.

WARNING

Removal of rust inhibitor is to be performed in a certified contamination control enclosure in order to reduce the potential for radiological contamination.

NOTE *This section is applicable to 55-, 85-, and 110-gal drums.*

Supervisor or Waste Handling Operator

[1] **ENSURE** that the prerequisite actions are completed.

Waste Handling Operator

[2] **IF** radiological contamination is detected during evolution,
THEN FOLLOW the direction of the RCT and RWP.

6.4 Waste Container Rust Inhibitor Removal (continued)

WARNING

At no time is any individual permitted to place any portion of the body under a suspended load in order to prevent personnel injury.

NOTE 1 *Stabilizing the drum during cleaning may be necessary in order to prevent the drum from swaying.*

NOTE 2 *Dried rust inhibitor may be left on the drum.*

Waste Handling Operator

[3] **REMOVE** rust inhibitor that is still in a viscous state using Fantastik® or equivalent, scrubbing pads or other approved scraping tool, rags, and other necessary items until the rust inhibitor and radiological contamination is removed to the extent possible.

NOTE ***($)*** *Drum height may be adjusted as necessary to permit access for removal of rust inhibitor. However, a spotter* ***SHALL*** *be present for TRU waste container lifts planned to exceed 4 ft above the ground surface. If the planned lift will exceed 12 ft from the bottom of the container to the ground, a critical lift plan* ***SHALL*** *be used. (SAC 5.7.8)*

Waste Handling Operator

[4] **LOWER** the drum onto a stable surface (e.g., ground or drum dolly).

[5] **COLLECT** the materials used to clean the rust inhibitor off of the waste container and the removed rust inhibitor, and **PLACE** the material in a plastic bag under the direction of an RCT.

NOTE *Steps 6.4[6] through 6.4[8] may be performed out of sequence or concurrently with the remaining steps of this procedure.*

[6] **REMOVE** the plastic bag of rust inhibitor debris from the contamination control area with the assistance of an RCT.

6.4 Waste Container Rust Inhibitor Removal (continued)

[7] **PLACE** the plastic bag of rust inhibitor contaminated material in a designated location [e.g., hazardous waste in a Satellite Accumulation Area (SAA)].

[8] **LABEL** the plastic bag of rust inhibitor as radioactive material with the waste information associated with the drum.

[9] **WHEN** the rust inhibitor contaminated material has been characterized,
THEN DISPOSITION the rust inhibitor contaminated material as directed by the Waste Management Coordinator (WMC).

[10] **IF** removable radiological contamination is above the task limits of the RWP is identified on the exterior of the drum,
THEN:

[A] **RECORD** the waste container unique identifier number on Attachment 5, TA-54 Area G Unloaded 55-gal Drum Contamination/Radiation Data Sheet.

[B] **RECORD** the Pre-Decon Removable Radiological Contamination Level information on Attachment 5.

[C] **DECONTAMINATE** the internal drum in accordance with the direction of the RCT and associated RWP, and **DOCUMENT** the decontamination process and materials on Attachment 5.

[D] **IF** the removable radiological contamination **CANNOT** be decontaminated from the internal drum,
THEN NOTIFY supervision and the RCT for the applicable actions.

[E] **RECORD** the Post-Decon Removable and Total Radiological Values on Attachment 5.

[F] **MOVE** the drum to a designated location.

6.5 Loading Overpack Drums

This section is a stand-alone section and may be performed independently of, or in conjunction with, other Performance sections.

NOTE *The overpack (e.g., 412-PACK) task on the WCATS desktop application may be performed in conjunction with the performance of the loading of an OVERPACK drum.*

Supervisor or Waste Handling Operator

[1] **ENSURE** that the prerequisite actions are completed.

Waste Handling Operator

[2] **IF** radiological contamination is known to exist or is suspected on containers, **THEN FOLLOW** the direction of the RCT and RWP.

[3] **OBTAIN** an OVERPACK drum prepared in accordance with Section 6.1, Drum Preparation, and **ENSURE** that a TRU DRUM PREPARATION task has been completed for the OVERPACK drum using a WCATS mobile device.

[4] **ENSURE** that the OVERPACK drum lid has been removed.

[5] **STAGE** the OVERPACK drum in an area with sufficient space to permit the loading of the OVERPACK drum, as necessary.

[6] **ENSURE** that the appropriate PPE has been donned in accordance with applicable procedures, RWPs, and specific facility requirements.

6.5 Loading Overpack Drums (continued)

NOTE *The following step may be performed out of sequence.*

[7] **ENSURE** that the following information on the drum to be overpacked has been recorded on the outside of the OVERPACK drum:

- RCRA codes
- Drum accumulation start date
- Radiological information
- Drum number

[8] **IF** the waste drum to be loaded is **NOT** suspended,
THEN:

[A] **ENSURE** that the drum lift fixture is properly attached to the lifting equipment (e.g., forklift or crane).

[B] **ATTACH** the drum lift fixture to the top of the waste drum to be loaded into the OVERPACK drum.

[C] **IF** a radiological contamination barrier (e.g., tape or plastic) has been attached to the drum to be loaded into the OVERPACK,
THEN ENSURE that the contamination barrier is protected from tearing (e.g., a rubber pad is placed between the point where the lift fixture contacts the waste container) as directed by an RCT.

[D] **SLOWLY RAISE** the drum lift fixture until it becomes tight.

6.5 Loading Overpack Drums (continued)

WARNINGS

1. **Pinch points exist during drum loading evolutions. Keep hands and fingers clear during drum loading evolutions to prevent injury. Lower the waste container into the OVERPACK before making adjustments to the drum lift fixture.**

2. **Severe personnel injury or death may occur from placing parts of the body beneath a suspended load. At no time is an individual permitted to place any portion of their body beneath a suspended load.**

[9] **($) ENSURE** that the waste drum has been raised high enough to allow the OVERPACK drum to be moved under the waste drum, ensuring that a spotter is present for lifts planned to exceed 4 ft above the ground surface and a critical lift plan is established for lifts planned to exceed 12 ft above the ground surface. (SAC 5.7.8)

NOTE *LCO 3.1.7 is not applicable to cemented or vitrified waste forms in accordance within the NOTE of LCO 3.1.7. However, cemented and vitrified waste forms will be treated conservatively and not exempted from the requirements of LCO 3.1.7.*

[10] **($) IF** the drum being loaded contains greater than or equal to 200 PE-Ci,
AND the drum or activity does **NOT** satisfy one of the following criterion,
- Is a POC
- Is being temporarily removed from a DOUBLEPACK during repackaging or characterization (e.g., NDE/NDA)
- Performing SSSR activities

THEN PERFORM a DOUBLEPACK inspection of the drum containing greater than or equal to 200 PE-Ci in accordance with Section 7, Doublepack Inspection, and **GO** to the following step. (LCO 3.1.7)

[11] **POSITION** the overpack drum beneath the suspended waste drum or **POSITION** the lifting equipment (e.g., forklift or crane) so that the waste drum is over the overpack drum.

6.5 Loading Overpack Drums (continued)

NOTE *Based on radiological conditions and the condition of the internal drum, a contamination control barrier may have been applied to the outside of the internal drum which must be removed from drums to be transferred to WCRRF.*

[12] **SLOWLY LOWER** the waste drum into the overpack and **REMOVE** the contamination control barrier (e.g., drum sleeve or bag), as necessary, until the drum lift fixture becomes slack.

[13] **DETACH** the drum lift fixture from the waste drum.

[14] **IF** the internal drum has been placed in a bag/sleeve,
AND the bag/sleeve has an unobstructed WIPP-approved filtered vent,
AND the bag/sleeve is to be closed,
THEN PIGTAIL the sleeve over the top of the waste drum.

[15] **CLOSE** the OVERPACK drum in accordance with Section 6.6, Drum Closure.

NOTE *The overpack (e.g., 412-PACK) task on the WCATS desktop application may be performed in conjunction with the performance of the loading of an OVERPACK drum.*

[16] **ENSURE** that a new PROCESS task (SELECT File > Task > Process) to overpack (e.g., 412-PACK) has been completed for the drum using the WCATS desktop application.

6.6 <u>Drum Closure</u>

This section is a stand-alone section and may be performed independently of, or in conjunction with, other Performance sections.

NOTE 1 *This section is applicable to the closing of 55-gal, POC drum, 85-gal, and 110-gal drums.*

NOTE 2 *Data may be recorded on Attachment 6 at an operationally convenient time in the performance of this section.*

Supervisor or Waste Handling Operator

[1] **ENSURE** that the prerequisite actions are completed.

6.6 Drum Closure (continued)

Waste Handling Operator

[2] **IF** radiological contamination is detected during evolution,
THEN FOLLOW the direction of the RCT and RWP.

NOTE *The following step applies to OVERPACK drums that are considered waste and will not be reused for overpacking TRU waste.*

[3] **IF** an OVERPACK drum lid filter was a self-tapping filter that was removed,
AND the OVERPACK drum is **NOT** to be used to OVERPACK TRU waste,
THEN:

[A] **ENSURE** that one of the following has been performed as directed by supervision:

[a] **SEAL** the vent hole opening as directed by an RCT (e.g., RTV or RP-approved tape).

[b] **INSTALL** the previously removed self-tapping filtered vent and **SEAL** the self-tapping filtered vent to the drum lid surface with RTV-732 sealant or equivalent; and after the sealant has set **APPLY** an additional RTV-732 sealant or equivalent between the filtered vent and the container surface, completely covering the gasket, but not the vent holes.

[B] **GO** to Step 6.6[26].

[4] **IF** an OVERPACK drum lid filter was a self-tapping filter that was removed,
AND the OVERPACK drum is to be used to OVERPACK TRU waste,
THEN:

[A] **ENSURE** that a WIPP-approved Short Shaft/Sample Port filtered vent (e.g., NucFil-072S) has been installed into the OVERPACK drum lid hole.

[B] **ENSURE** that RTV-732 sealant or equivalent has been applied around the filtered vent ensuring vent holes are not obstructed.

[5] **RECORD** the following:

- Drum unique identifier number on Attachment 6, TA-54 Area G Drum Closure Data Sheet
- Description of any unusual item condition such as that the item is wrapped in plastic and the reason for overpacking a drum, as applicable, in the Comments section on Attachment 6.

6.6 Drum Closure (continued)

[6] **IF** closing a POC drum from sampling,
THEN:

[A] **PLACE** the fiberboard packing top (i.e., lid), matching the pipe bolt heads, hoist ring, and filter with the cutouts in the fiberboard top.

[B] **INSTALL** the spacers on the top of the fiberboard liner top.

[7] **ENSURE** that the drum lid is installed on the drum, ensuring that the WIPP-approved bung-filtered vent is directly in-line with the drum seam.

[8] **ENSURE** that the drum lid gasket is properly fitted in the cover groove.

[9] **ENSURE** that the drum closure ring is installed with closure ring lugs facing downward and the closure ring opening positioned directly in-line with the drum seam.

[10] **IF** closing a Skolnik drum,
THEN ENGAGE bolt and nut and **TIGHTEN** the closure ring bolt until the ring opening edges are within approximately 1/2 in. from each other while **TAPPING** around the closure ring with a rubber hammer or dead-blow mallet.

[11] **IF** closing a Myers drum,
THEN ENGAGE bolt and nut and **TIGHTEN** closure ring bolt while **TAPPING** around the closure ring with a rubber hammer or dead-blow mallet.

[12] **ENSURE** that the torque wrenches to be used are calibrated,
AND DOCUMENT the following on Attachment 6:
- M&TE identification number
- Calibration expiration date
- Torque wrenches range specified on the Calibration Certificate
- Tolerance (+/-)

[13] **CHECK** (√) YES or NO on Attachment 6 to indicate whether the torque value is within the calibrated range of the torque wrench, and **PRINT**, **SIGN** and **DATE** on Attachment 6.

6.6 Drum Closure (continued)

[14] **IF** NO was checked (√) in the previous step,
THEN NOTIFY supervision that the torque value is not within the calibrated range of the torque wrench, and **REQUEST** further direction.

[15] **TORQUE** the drum closure ring bolt to the following applicable value while **TAPPING** around the closure ring with a rubber hammer or dead-blow mallet, and **RECORD** the actual torque achieved on Attachment 6.

- Skolnik — 55 to 60 ft-lb
- Myers — Greater than or equal to 60 ft-lb

[16] **POSITION** the jam nut against the drum closure ring bolt-head side of the bolt (unthreaded lug).

[17] **TIGHTEN** jam nut snug against the closure ring unthreaded lug.

[18] **DETERMINE** whether the drum closure ring threaded end is touching the jam nut or the drum closure ring ends are touching, and **CHECK** (√) SAT or UNSAT the determination on Attachment 6.

[19] **IF** the drum closure ring threaded end is touching the jam nut,
OR the drum closure ring ends are touching,
THEN:

NOTE *The drum closure ring may be removed from the drum to permit the installation of a drum closure ring that will satisfy the manufacturer's requirements.*

[A] **REMOVE** the drum lid.

[B] **IDENTIFY** (e.g., tag or mark) the drum closure ring indicating that the drum closure ring is defective.

[C] **SEGREGATE** the drum closure ring to prevent reuse.

[D] **NOTIFY** supervision of the discrepancy.

6.6 Drum Closure (continued)

NOTE 1 *A QA representative may be contacted for assistance with the NCR process.*

NOTE 2 *The NCR may be initiated at an operationally convenient time.*

Supervisor

[E] **ENSURE** that an NCR is initiated in accordance with P330-6, as required.

Waste Handling Operator

[F] **OBTAIN** a new drum closure ring.

NOTE *A TRU Waste Storage Record (TWSR) Change Form (Form 2177) may be initiated at an operationally convenient time.*

[G] **COMPLETE** a TWSR Change Form (Form 2177) indicating the waste container filter replacement.

[H] **GO** to Step 6.6[7].

Waste Handling Operator

[20] **IF** radiological contamination is detected during the evolution,
THEN FOLLOW the direction of the RCT and RWP.

NOTE *LCO 3.1.7 is <u>not</u> applicable to cemented or vitrified waste forms in accordance within the NOTE of LCO 3.1.7. However, cemented and vitrified waste forms will be treated conservatively and not exempted from the requirements of LCO 3.1.7.*

[21] **IF** closing an OVERPACK drum containing a TRU WASTE drum with greater than or equal to 200 PE-Ci,
AND the TRU WASTE drum or activity does **NOT** satisfy <u>one</u> of the following criterion,

- Is a POC
- Is being temporarily removed from a DOUBLEPACK during repackaging or characterization (e.g., NDE/NDA)
- Performing SSSR activities

THEN:

[A] **($) PERFORM** a DOUBLEPACK inspection of the OVERPACK drum in accordance with Section 7, and **GO** to the following step. (LCO 3.1.7)

6.6 Drum Closure (continued)

[B] **($) CHECK** (√) SAT or UNSAT on Attachment 8 to indicate whether the requirements of a DOUBLEPACK are satisfied. [AC 5.6.11(2) and SR 4.1.7]

[C] **NOTIFY** supervision and the TA-54 Operations Center of the drum number and that the DOUBLEPACK requirements have been satisfied.

NOTE *The weight of the internal waste drum should be obtained from the TWSR in order to ensure that the correct drum weight is obtained, but the drum weight recorded on the lid of the internal waste drum may be used.*

[22] **IF** closing an OVERPACK drum,
AND the OVERPACK drum is **NOT** to be weighed,
THEN:

[A] **RECORD** the internal waste drum weight on Attachment 6, as applicable.

[B] **RECORD** the following applicable OVERPACK drum tare weight on Attachment 6:
- 85-gal OVERPACK drum is 80 lb
- 110-gal OVERPACK drum is 102 lb

[C] **SUM** the weight of the internal waste drum and the tare weight of the OVERPACK drum, and **RECORD** the overpack drum gross weight on Attachment 6.

[D] **GO** to Step 6.6[25].

NOTE *The following steps may be performed out of sequence.*

[23] **IF** closing a POC drum,
AND the POC drum is **NOT** to be weighed,
THEN:

[A] **RECORD** the gross weight of the POC drum on Attachment 6.

[B] **GO** to Step 6.6[25].

[24] **WEIGH** the drum, and **RECORD** the drum gross weight on Attachment 6.

6.6 Drum Closure (continued)

[25] **RECORD** drum gross weight on drum lid in approximately 1/2 in. lettering using a permanent marker, and **CHECK** (√) SAT or UNSAT on Attachment 6.

NOTE *Steps 6.6[26] and 6.6[27] may be performed out of sequence.*

[26] **ENSURE** that the WM-SVS group has been notified to prepare a TWSR for the drum or **INITIATE** a TWSR in WCATS.

[27] **ENSURE** that the waste drum has been labeled in accordance with EP-DIV-DOP-20043, as required.

Waste Handling Operator

[28] **IF** radiological contamination is detected during evolution,
THEN FOLLOW the direction of the RCT and RWP.

[29] **ATTACH** the original Attachment 6 to the drum or **ENSURE** that Attachment 6 is forwarded to the applicable supervisor.

[30] **IF** a container/item was loaded into an OVERPACK drum,
AND a new TWSR was **NOT** generated,
THEN ENSURE that a TRU Waste Storage Record Change Form (Form 2177) is initiated.

NOTE *The following step may be performed out of sequence.*

[31] **ENSURE** that the RECEIVING CONTAINER information (e.g., container closure date, time, DOUBLEPACK, and other requested information) has been updated in the WCATS desktop application.

7. INSTRUCTIONS—DOUBLEPACK INSPECTION

This section is a stand-alone section and may be performed independently of, or in conjunction with, other Performance sections.

NOTE *Radiological surveys may be performed as determined necessary [e.g., by an RP representative (e.g., RCT)] any time during the performance of this procedure.*

Supervisor or Waste Handling Operator

[1] **ENSURE** that the prerequisite actions are completed.

[2] **ENSURE** that the TRU WASTE Container Unique Identifier is recorded on each page of Attachment 8, TA-54 Area G Doublepack Inspection Data Sheet.

[3] **IF** the TRU WASTE container is **NOT** suspended,
THEN LIFT the TRU WASTE container to a height sufficient to allow an inspection of the bottom of the TRU WASTE container.

WARNING

At no time is any individual permitted to place any portion of their body under a suspended load to prevent personnel injury.

NOTE *A satisfactory inspection is indicated by a YES answer for each inspection criteria on Attachment 8.*

Waste Handling Operator

[4] **($) VISUALLY INSPECT** the TRU WASTE container integrity using the following criteria, and **RECORD** the TRU WASTE container unique identifier and **CHECK** (√) YES or NO for the inspection in the table on Attachment 8: [AC 5.6.11(2)])

- TRU WASTE container lid is installed
- No obvious signs of degradation (i.e., no clearly visible and potentially significant defects)
- No evidence that container is, or has been, pressurized (i.e., no expansion of sidewalls, bottom, or top, and no warping)
- No potentially significant rust or corrosion such that wall thinning, pinholes, or breaches are likely or load bearing capacity is suspect (i.e., no caked layers or deposits of rust and no rust present in the form of deep metal flaking or built-up areas of corrosion products)

7. INSTRUCTIONS—DOUBLEPACK INSPECTION (continued)

- No split seams, tears, obvious holes, punctures (of any size), creases, broken welds or cracks (i.e., no obvious leaks, holes or openings, cracks, deep crevices, creases, tears, broken welds, sharp edges or pits, are either breached or on the verge of being breached)
- Container is properly closed (i.e., no fastener or locking ring damage or excessive corrosion and fastener and jam nut properly aligned)
- No dents, scrapes, or scratches that make container's structural integrity questionable or prevent top and bottom surfaces from being parallel (i.e., no deep gouges, scratches, or abrasions over wide areas, top and bottom surfaces not parallel, or large-deep dents)
- No discoloration indicating leakage or other evidence of leakage from container (i.e., no evidence of leakage at penetrations, welds, seams, or intersections of one or more metal sheets or plates)
- Container is not bulged (i.e., no expansion of sidewalls, bottom, or top, no protrusion of the side wall beyond a line connecting the peaks of the surrounding rolling hoops or bottom/top ring, or no deformation of the rolling hoop)
- Container determined to be constructed of non-combustible material (i.e., exterior surfaces constructed of metal or concrete)

[5] **LOWER** the drum onto a stable surface (e.g., ground).

NOTE *A direct loaded container (e.g., 55-gal drum with waste inside) associated with a DOUBLEPACK that does not satisfy the container integrity inspection criteria* ***SHALL*** *be overpacked into to two sound integrity OVERPACK containers in order to satisfy the DOUBLEPACK requirement.*

[6] **IF** a direct loaded container (e.g., 55-gal drum with waste inside) associated with a DOUBLEPACK was inspected,
AND NO was checked (√) for any inspection criteria,
THEN GO to the following applicable section of this procedure to overpack the container:

- Section 5.4, Loading SWBs
- Section 6.5, Loading Overpack Drums

7. INSTRUCTIONS—DOUBLEPACK INSPECTION (continued)

NOTE *An OVERPACK container of a DOUBLEPACK that does not satisfy the container integrity inspection criteria **SHALL** be unloaded and the inner container loaded into different sound integrity OVERPACK container in order to satisfy the DOUBLEPACK requirement.*

[7] **IF** an OVERPACK container of a DOUBLEPACK was inspected,
AND NO was checked (√) for any inspection criteria,
THEN GO to the following applicable section of this procedure to unload the OVERPACK container:

- Section 5.3, Unloading SWBs
- Section 6.3, Unloading Overpack Drums (e.g., 85- or 110-gal)

NOTE *A direct loaded container (e.g., 55-gal drum with waste inside) associated with a DOUBLEPACK that does not satisfy the container integrity inspection criteria **SHALL** be overpacked into two sound integrity OVERPACK containers in order to satisfy the DOUBLEPACK requirement.*

[8] **IF** an OVERPACK that is the first layer of a DOUBLEPACK for a direct loaded container (e.g., 55-gal drum with waste inside) was inspected,
AND YES was checked (√) for the inspection criteria,
THEN GO to the following applicable section of this procedure to overpack the container into a second OVERPACK:

- Section 5.4, Loading SWBs
- Section 6.5, Loading Overpack Drums

[9] **IF** the outer waste container of a DOUBLEPACK container was inspected,
THEN:

[A] **CHECK** (√) the applicable box on Attachment 8 to indicate the outer waste container type (e.g., 85- or 110-gal drum)

NOTE *The following steps are performed using the WCATS desktop application.*

[B] **LOCATE** the CONTAINER PROFILE of the waste container being DOUBLEPACKED in the WCATS desktop application.

[C] **UNLOCK** the CONTAINER PROFILE.

7. INSTRUCTIONS—DOUBLEPACK INSPECTION (continued)

[D] **SELECT** the OPTIONS pull-down menu and **CLICK** on OVERPACK CONTAINER.

[E] **($) CHECK** (√) PACKAGE MEETS DOUBLE-PACK REQUIREMENTS in the WCATS application. (LCO 3.1.7)

[F] **CLICK** on the LAYERS OF CONFINEMENT tab.

[G] **ENSURE** that the appropriate layers of confinement area displayed.

[H] **CLICK** OK.

[I] **LOCK** the CONTAINER PROFILE.

[10] **IF** this section was entered from another section of this procedure, **THEN GO** to the applicable section.

8. POST-PERFORMANCE ACTIVITY

NOTE *Completing a Post-Job Review may be accomplished using the applicable P300 form or online (the preferred method since the institution has access to feedback and lessons learned* http://int.lanl.gov/safety/iwmc/ *[Click on the Submit IWD Part 4 Post-Job Review]).*

8.1 Disposition

Waste Handling Operator

[1] **SIGN** and **DATE** the applicable attachments.

[2] **FORWARD** the applicable attachments to the Shift Operations Supervisor (SOS) or designee.

Supervisor

[3] **REVIEW** the applicable attachments for accuracy and completeness.

[4] **IF** any discrepancies are identified with the attachments,
THEN working with the original surveillant correct the documentation.

[5] **IF** any deficiencies were identified,
THEN INITIATE actions to correct the deficiency [e.g., Facility Service Request (FSR) System], and **DOCUMENT** the actions taken (e.g., FSR Issue Number) in the Comments section of the applicable appendices.

[6] **SIGN** and **DATE** the applicable attachments.

8.1 Disposition (continued)

Supervisor or designee

[7] **IF** this procedure is categorized as a moderate or high/complex activity and any of the following occur:

- An activity was completed for the first time
- A request was made by anyone involved with the performance of this procedure to perform a post-job review
- An abnormal event occurred
- A revision to an existing procedure was issued and it has been determined by the procedure owner or designee that a Post-Job Review is required

THEN PERFORM a formal Post Job Review (PJR) in accordance with P300.

[8] **IF** the Post-Job Review identified any necessary changes to this procedure,
THEN INITIATE a revision to this procedure.

8.2 Records Processing

Supervisor or designee

[1] **ENSURE** that documents generated by the performance of this procedure are processed as follows:

Record Identification	Record Type Determination	Protection/Storage Methods	Processing Instructions
Attachment 1, TA-54 Area G Standard Waste Box (SWB) Preparation Data Sheet Attachment 2, TA-54 Area G Standard Waste Box (SWB) Loading Data Sheet Attachment 3, TA-54 Area G Standard Waste Box (SWB) Closure Data Sheet Attachment 4, TA-54 Area G Drum Preparation Data Sheet Attachment 5, TA-54 Area G Unloaded 55-gal Drum Contamination/Radiation Data Sheet Attachment 6, TA-54 Area G Drum Closure Data Sheet Attachment 7, TA-54 Area G Overpack Waste Container Labeling Discrepancy Data Sheet Attachment 8, TA-54 Area G Doublepack Inspection Data Sheet Attachment 9, TA-54 Area G Drum Lid Restraint Inspection Data Sheet	QA Record	Supervision **SHALL** implement a reasonable level of protection to prevent loss and degradation. Records should be maintained in a one-hour fire rated metal file cabinet when not in use.	When the records are ready for final disposition, the record is transferred to Records Management in accordance with EP-DIR-AP-10003, Records Management Procedure for ADEP Employees.

9. REFERENCES

ABD-WFM-002, Technical Safety Requirements (TSRs) for Technical Area 54, Area G

EP-AREAG-WO-DOP-1070, TA-54 Area G Unvented TRU Waste Container Handling and Storage

EP-AREAG-WO-DOP-0220, TA-54 Area G Building 412 Containment Tent Operator Round Sheet

EP-AREAG-WO-DOP-1061, TA-54 Area G Dome 375 PermaCon Operator Round Sheet

EP-AREAG-WO-DOP-1162, TA-54 Area G Dome 231 PermaCon Operator Round Sheet

EP-DIR-AP-10003, Records Management Procedure for ADEP Employees

EP-DIV-AP-0112, EWMO Pre-Job Briefings

EP-DIV-AP-13, WDP TSR-Related Operational Limits Actions Compliance Tracking

EP-DIV-DOP-20043, LTP TRU Waste Container Labeling

EP-DIV-AP-20059, EWMO Watchbill Administration

EP-DIV-DOP-20086, EWMO Division Specific Forklift and Drum Handler Equipment Operations

EP-DIV-POLICY-20057, EWMO Health and Safety Policy – Manual Movement

NCS-CSLA-13-064, TRU Container Receipt and Staging, and Gas Generation Testing

P101-4, Forklift and Powered Industrial Trucks

P101-18, Procedure for Pause/Stop Work

P101-25, Cranes, Hoists, Lifting Devices, and Rigging Equipment

P121, Radiation Protection

P300, Integrated Work Management

P330-6, Nonconformance Reporting

RP-1-DP-65, Radiological Containments

APPENDIX 1
Page 1 of 1

DEFINITIONS

Cone of Safety – An area in which personnel and equipment are separated from a hoisted load by distance. An example of a cone of safety is a cone, based at floor level, centered under the crane load, with radius equal to the height of the crane load above the floor. A number of factors may impact the size of the area and include the height at which the load is being lifted, the need to position loads with close tolerances, and the physical dimensions of the load and location where it is being handled. Physical barricades, posting, or continuous monitoring may be used to designate the area.

DOUBLEPACK - To place a TRU WASTE container inside another TRU WASTE container where both containers are of sound integrity.

OVERPACK – To place a waste container inside another, larger waste container to provide an additional barrier between the radioactive waste and the environment. For the purposes of this procedure, the term OVERPACK refers to an 85-gallon or 110-gallon drum or an SWB into which a waste container will be placed.

WASTE CONTAINER – Any one of a number of container types used to hold radioactive waste or hazardous material. These include typical metal containers, such as drums or SWBs, fiberglass-reinforced plywood (FRP) crates, and others. For the purposes of this document, the term WASTE CONTAINER refers to a container holding waste material, and not an empty container.

APPENDIX 2
Page 1 of 1

STANDARD WASTE BOX CLOSURE SOCKET
FLAT HEAD CAP SCREW INSTALLATION PATTERN

NOTE 1 *The letters, noted on the SWB lid assembly, represent the sequence for initial installation of the screws. The remaining screws may be installed in any sequence.*

NOTE 2 *The numbers 1 through 42 represent a crisscross pattern by which the screws* ***SHALL*** *be torqued.*

NOTE 3 *A commercial liquid thread sealant (e.g., Loctite® 246)* ***SHALL*** *be applied to all screws before installation.*

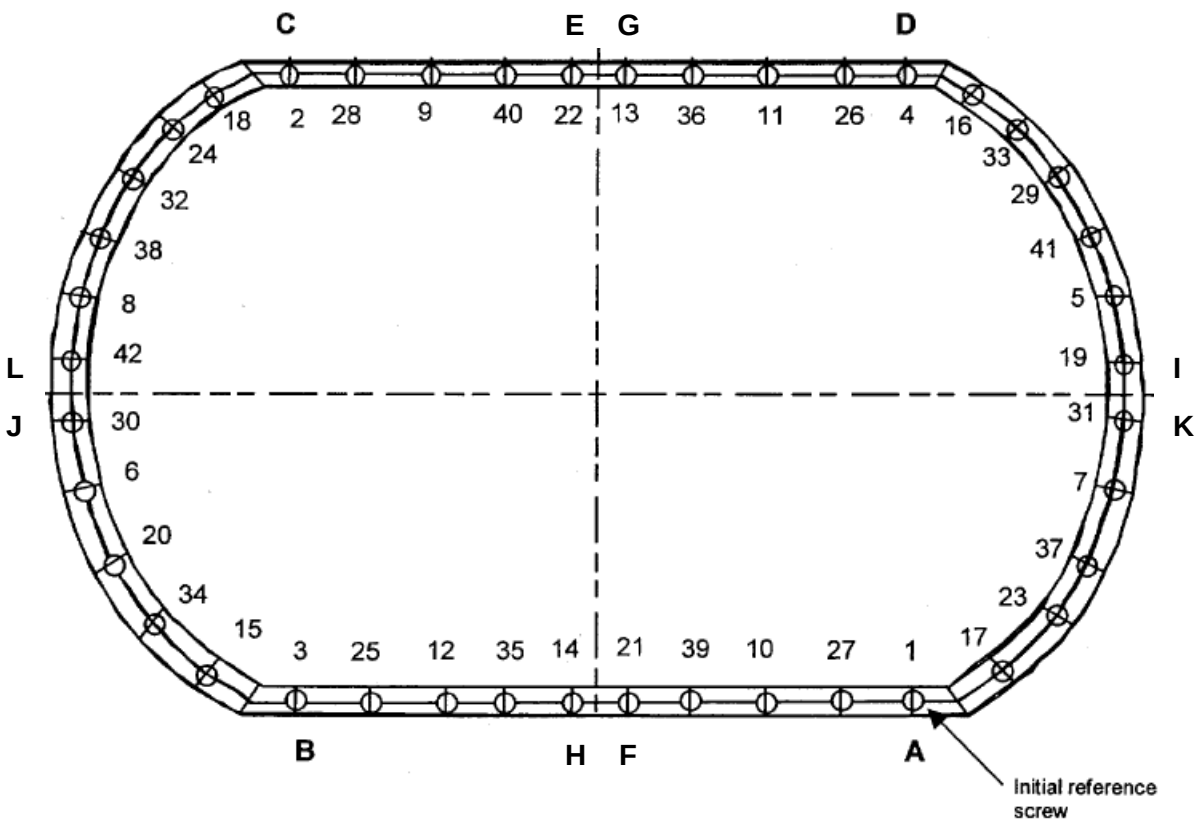

APPENDIX 3
Page 1 of 1

NUCLEAR FILTER TECHNOLOGY FILTERED VENT SEALS

Figure 3-1, Skolnik Rieke VG1 3/4 in. Bung Base and Flat, Neoprene Seal

Figure 3-2, Skolnik Rieke VG2 3/4 in. Bung Base and O-ring Seal

ATTACHMENT 1
Page 1 of 1

TA-54 AREA G STANDARD WASTE BOX (SWB) PREPARATION DATA SHEET

5.1[19] SWB serial number: _____

5.1[30] Torque wrench information:
- M&TE No.: _____
- Cal. Expiration Date: _____
- Tolerance: _____

- Torque wrench listed above is within the acceptable ranges as displayed on the calibration certificate. ☐ YES ☐ NO

Performed By: _____ / _____ / _____ / _____
Operator (print) Signature Z # Date

IPC-1

5.1[31] Filtered Vent 1 torque value [180 in-lb (156 to 204 in-lb)]: _____ in-lb

Filtered Vent 2 torque value [180 in-lb (156 to 204 in-lb)]: _____ in-lb

Filtered Vent 3 torque value [180 in-lb (156 to 204 in-lb)]: _____ in-lb ☐ N/A

Filtered Vent 4 torque value [180 in-lb (156 to 204 in-lb)]: _____ in-lb ☐ N/A

5.1[32] WIPP-approved filtered vent information:

	Filtered Vent 1	Filtered Vent 2	Filtered Vent 3	Filtered Vent 4
Manufacturer:				
Model No.:				
Serial No.:				
Manufacture Date:				

IPC-1

5.1[38] Plug 1 torque value 120 in-lb (60 to 180 in-lb): _____ in-lb ☐ N/A

Plug 2 torque value 120 in-lb (60 to 180 in-lb): _____ in-lb ☐ N/A

Comments: _____

8.1[1] Performed By: _____ / _____ / _____ / _____
Operator (print) Signature Z # Date

8.1[6] Reviewed By: _____ / _____ / _____ / _____
Supervisor or designee (print) Signature Z # Date

ATTACHMENT 2
Page 1 of 1

TA-54 AREA G STANDARD WASTE BOX (SWB) LOADING DATA SHEET

5.4[8][A] SWB serial number: _____

Individual Drum No. (5.4[8][A])	Vent Make/Model (5.4[8][A])	Individual Drum PE-Ci Value (5.4[8][A])	Individual Drum FGE Value (5.4[8][A])	Total Proposed SWB PE-Ci Value (5.4[8][B])	Total Proposed SWB FGE Value (5.4[8][B])
	/				
	/				
	/				
	/				

5.4[8][C] Total Proposed SWB FGE Value ≤ 325 PE-Ci: ☐ SAT ☐ UNSAT

5.4[8][E][a] Direct loaded SWB ≤ 560 PE-Ci or 1,800 PE-Ci, as applicable:
☐ SAT ☐ UNSAT ☐ N/A

5.4[8][A] Unusual internal item conditions: _____

5.4[8][A] Reason for overpacking drums: _____

Comments: _____

8.1[1] Performed By: _____ / _____ / _____ / _____
Operator (print) Signature Z # Date

Performed By: _____ / _____ / _____ / _____
Operator (print) Signature Z # Date

Performed By: _____ / _____ / _____ / _____
Operator (print) Signature Z # Date

Performed By: _____ / _____ / _____ / _____
Operator (print) Signature Z # Date

8.1[6] Reviewed By: _____ / _____ / _____ / _____
Supervisor or designee (print) Signature Z # Date

ATTACHMENT 3
Page 1 of 1
TA-54 AREA G STANDARD WASTE BOX (SWB) CLOSURE DATA SHEET

5.5[3] SWB serial number: _____

5.5[8] SWB gasket inspection: Capable of sealing: ☐ YES ☐ NO
Expiration Date: _____

5.5[31] SWB torque wrench: M&TE No.: _____
Cal. Expiration Date: _____
Tolerance: _____
Torque wrench listed above is within the acceptable ranges as displayed on the calibration certificate. ☐ YES ☐ NO

Performed By: _____ / _____ / _____ / _____
Operator (print) Signature Z # Date

5.5[33] SFHCS first torque value 30 ft-lb (30 to 40 ft-lb): _____ ft-lb

5.5[34] SFHCS second torque value 50 ft-lb (50 to 60 ft-lb): _____ ft-lb

5.5[37][A]/[B] Total internal waste container or package weight (lb):

_____ lb + _____ lb + _____ lb + _____ lb = _____ lb
Container 1 Container 2 Container 3 Container 4 Total Internal Wt. (5.5[37][B])

_____ lb + 640 lb = _____ lb
Total Internal Wt. (5.5[37][B]) SWB Tare Wt. SWB Gross Wt. (5.5[37][C]/[38])

5.5[39] SWB Gross Wt. recorded on SWB lid in 1/2 in. lettering: ☐ SAT ☐ UNSAT

Comments: _____

8.1[1] Performed By: _____ / _____ / _____ / _____
Operator (print) Signature Z # Date

Performed By: _____ / _____ / _____ / _____
Operator (print) Signature Z # Date

Performed By: _____ / _____ / _____ / _____
Operator (print) Signature Z # Date

Performed By: _____ / _____ / _____ / _____
Operator (print) Signature Z # Date

8.1[6] Reviewed By: _____ / _____ / _____ / _____
Supervisor or designee (print) Signature Z # Date

ATTACHMENT 4
Page 1 of 1

TA-54 AREA G DRUM PREPARATION DATA SHEET

6.1[3] Drum information:
Purchase Order No.: _____
Lot No.: _____
Manufacture Date: _____

6.1[8] Filtered vent information:
Manufacturer: _____
Model No.: _____
Serial No.: _____
Manufacture Date: _____

Filtered vent and 2 in. bung torque wrench information:

	Filtered Vent	2 in. Bung
M&TE No.:	_____	_____
Cal. Expiration Date:	_____	_____
Tolerance:	_____	_____

Torque wrench listed above is within the acceptable ranges as displayed on the calibration certificate. ☐ YES ☐ NO

Performed By: _____ / _____ / _____ / _____
Operator (print) Signature Z # Date

6.1[12] Filtered Vent torque value [120 in-lb (96 to 144 in-lb)]: _____ in-lb

6.1[15][B] 2 in. bung plug torque value: _____ ft-lb

Comments: _____

8.1[1] Performed By: _____ / _____ / _____ / _____
Operator (print) Signature Z # Date

8.1[6] Reviewed By: _____ / _____ / _____ / _____
Supervisor or designee (print) Signature Z # Date

ATTACHMENT 5
Page 1 of 1

TA-54 AREA G UNLOADED 55-GAL DRUM CONTAMINATION/RADIATION DATA SHEET

NOTE 1 *Attach additional pages as necessary to completely describe the 55-gal suspect drum condition, radiological contamination and radiation levels.*

NOTE 2 *Record N/A for any items that are not applicable.*

6.3[38][A]/ 6.4[10][A] Waste Container Unique Identifier No.: _____

6.3[38][B]/ 6.4[10][B] Pre-decon removable radiological contamination level: _____ dpm

6.3[38][C]/ 6.4[10][C] Removable radiological contamination decontamination process and materials:_____
_____
_____
_____
_____

6.3[38][E]/ 6.4[10][E] Radiological information:
Post-decon removable radiological contamination level: _____ dpm
Post- decon dose rate on contact: _____ mrem/hr
Post- decon dose rate at 30 cm: _____ mrem/hr
Post- decon dose rate at 1 meter: _____ mrem/hr

Comments: _____
_____
_____

8.1[1] Performed By: _____ / _____ / _____ / _____
Operator (print) Signature Z # Date

8.1[6] Reviewed By: _____ / _____ / _____ / _____
Supervisor or designee (print) Signature Z # Date

ATTACHMENT 6
Page 1 of 1

TA-54 AREA G DRUM CLOSURE DATA SHEET

6.6[5] Drum Unique Identifier No.: _____

6.6[12] Drum closure ring torque wrench information:
M&TE No.: _____
Cal. Expiration Date: _____
Range in ft-lb: _____
Tolerance: _____

6.6[13] Torque wrench listed above is within the acceptable ranges as displayed on the calibration certificate. ☐ YES ☐ NO

Performed By: _____ / _____ / _____ / _____
Operator (print) Signature Z # Date

6.6[15] Drum closure ring torque value: _____ ft-lb

6.6[18] Threaded lug of the drum closure ring is not touching the jam nut and the locking ring lugs are not touching. ☐ SAT ☐ UNSAT

NOTE *The tare weight of a 85-gal OVERPACK drum is 80 lb. The tare weight of a 110-gal OVERPACK drum is 102 lb.*

_____ lb + _____ lb = _____ lb
Internal Drum Wt. (6.6[22][A]) Overpack Tare Wt. (6.6[22][B]) Gross Wt. (6.6[22][C]/[23][A]/[24])

6.6[25] Drum gross weight recorded on drum lid in approximately 1/2 in. lettering: ☐ SAT ☐ UNSAT

Comments: _____

8.1[1] Performed By: _____ / _____ / _____ / _____
Operator (print) Signature Z # Date

8.1[6] Reviewed By: _____ / _____ / _____ / _____
Supervisor or designee (print) Signature Z # Date

ATTACHMENT 7
Page 1 of 1

TA-54 AREA G OVERPACK WASTE CONTAINER LABELING DISCREPANCY DATA SHEET

5.3[15][D][b]/ 6.3[27][B]

OVERPACK waste container unique identifier: _____

OVERPACK container type: ☐ SWB ☐ 110-gal ☐ 85-gal

5.3[15][D][b]/ 6.3[27][B]

Internal drum labeling, as applicable:

- Internal drum container type: ☐ 85-gal ☐ 55-gal
- Barcode number: _____
- Filtered vent number: _____
- Seal number: _____
- Hazardous Codes: _____
- Special labels (e.g., Be) _____

5.3[15][D][b]/ 6.3[27][B]

Waste container condition (e.g., rust, dents, or integrity issues): _____

5.3[15][D][d]/ 6.3[27][D]

Temporary Waste Container Unique Identifier: _____

Comments: _____

8.1[1] Performed By: _____ / _____ / _____ / _____
Operator (print) Signature Z # Date

8.1[6] Reviewed By: _____ / _____ / _____ / _____
Supervisor or designee (print) Signature Z # Date

ATTACHMENT 8

Page 1 of 2

TA-54 AREA G DOUBLEPACK INSPECTION DATA SHEET

7.[2] TRU WASTE Container Unique Identifier No.: _____

NOTE *Satisfactory inspection is indicated by a YES answer for each inspection criteria below.*

	Inner Container _____ Container No. (7.[4])	Inner Container _____ Container No. (7.[4])	Inner Container _____ Container No. (7.[4])	Inner Container _____ Container No. (7.[4])	Outermost Container _____ Container No. (7.[4])
($)TRU waste container lid is installed? [AC 5.6.11(2)]	☐ YES ☐ NO	☐ YES ☐ NO ☐ N/A	☐ YES ☐ NO ☐ N/A	☐ YES ☐ NO ☐ N/A	☐ YES ☐ NO
($) No obvious container degradation? [AC 5.6.11(2)]	☐ YES ☐ NO	☐ YES ☐ NO ☐ N/A	☐ YES ☐ NO ☐ N/A	☐ YES ☐ NO ☐ N/A	☐ YES ☐ NO
($) No evidence that the container is, or has been, pressurized? [AC 5.6.11(2)]	☐ YES ☐ NO	☐ YES ☐ NO ☐ N/A	☐ YES ☐ NO ☐ N/A	☐ YES ☐ NO ☐ N/A	☐ YES ☐ NO
($) No potential significant rust or corrosion such that wall thinning, pin holes, or breaches are likely or the load bearing capacity is suspect? [AC 5.6.11(2)]	☐ YES ☐ NO	☐ YES ☐ NO ☐ N/A	☐ YES ☐ NO ☐ N/A	☐ YES ☐ NO ☐ N/A	☐ YES ☐ NO
($) No split seams, tears, obvious holes, punctures (of any size), creases, broken welds, or cracks? [AC 5.6.11(2)]	☐ YES ☐ NO	☐ YES ☐ NO ☐ N/A	☐ YES ☐ NO ☐ N/A	☐ YES ☐ NO ☐ N/A	☐ YES ☐ NO
($) Container closed? [AC 5.6.11(2)]	☐ YES ☐ NO	☐ YES ☐ NO ☐ N/A	☐ YES ☐ NO ☐ N/A	☐ YES ☐ NO ☐ N/A	☐ YES ☐ NO
($) No dents, scrapes, or scratches that make the container's structural integrity questionable or prevent the top and bottom surfaces from being parallel? [AC 5.6.11(2)]	☐ YES ☐ NO	☐ YES ☐ NO ☐ N/A	☐ YES ☐ NO ☐ N/A	☐ YES ☐ NO ☐ N/A	☐ YES ☐ NO
($) No discoloration, which would indicate leakage or other evidence of leakage of material from the container? [AC 5.6.11(2)]	☐ YES ☐ NO	☐ YES ☐ NO ☐ N/A	☐ YES ☐ NO ☐ N/A	☐ YES ☐ NO ☐ N/A	☐ YES ☐ NO
($) No evidence of container bulging [AC 5.6.11(2)]	☐ YES ☐ NO	☐ YES ☐ NO ☐ N/A	☐ YES ☐ NO ☐ N/A	☐ YES ☐ NO ☐ N/A	☐ YES ☐ NO
($) Container determined to be constructed of non-combustible material (i.e., exterior surfaces constructed of metal or concrete) [AC 5.6.11(2)]	☐ YES ☐ NO	☐ YES ☐ NO ☐ N/A	☐ YES ☐ NO ☐ N/A	☐ YES ☐ NO ☐ N/A	☐ YES ☐ NO

ATTACHMENT 8
Page 2 of 2

7.[2] TRU WASTE Container Unique Identifier No.: _____

7.[9][A] Outer TRU WASTE container type: ☐ 85-gal ☐ 110-gal ☐ SWB

5.5[35][B]/ 6.6[21][B] **($)** TRU WASTE container satisfies the DOUBLEPACK requirements. [AC 5.6.11(2) and SR 4.1.7] ☐ SAT ☐ UNSAT

Comments: _____

8.1[1] Performed By: _____ / _____ / _____ / _____
Operator (print) Signature Z # Date

8.1[6] Reviewed By: _____ / _____ / _____ / _____
Supervisor or designee (print) Signature Z # Date

ATTACHMENT 9
Page 1 of 1

TA-54 AREA G DRUM LID RESTRAINT INSPECTION DATA SHEET

Step	Inspection Criteria	Inspection Result
5.3[6][A] / 5.4[9][A]	**($)** Drum lid restraint inspected for degradation (e.g., no indication of cracked parts, missing fasteners, loose or frayed parts, excessive wear, or unusual deformation): (SR 4.4.2.1)	☐ SAT ☐ UNSAT
5.3[6][D] / 5.4[9][D]	**($)** Drum lid restraint installed: (SR 4.4.2.1)	☐ SAT ☐ UNSAT

Comments: _____

8.1[1] Performed By: _____ / _____ / _____ / _____
Operator (print) Signature Z # Date

8.1[6] Reviewed By: _____ / _____ / _____ / _____
Supervisor or designee (print) Signature Z # Date

EP-AREAG-WO-DOP-1084, TA-54 Area G TRU Waste Drum SSSR Activities

LAUR-14-24894

TA-54 Area G TRU Waste Drum SSSR Activities

Effective Date: 06/06/14

Hazard Class:	☐	Low	☒	Moderate	☐	High/Complex
Usage Mode:	☐	Reference	☒	UET	☐	Both UET & Reference

The Responsible Manager has determined that the following organizations' review/concurrence is required for the initial document and for major revisions a same type and level review is required. Review documentation is contained in the Document History File:

Engineering
Shift Operations Manager
Quality Assurance
Radiation Protection
Shift Operation Manager
Criticality Safety Officer
Central Characterization Program
Support-Services Subcontractor
Environmental Stewardship
Industrial Hygiene and Safety
Subject-Matter Expert
Criticality Safety
Fire Protection Engineer

Responsible Manager, LTP-DDP Operations Manager

Name (print)	Z#	Signature	Date
Louis Jalbert	121997	/s/ Lou Jalbert	06/03/14

Classification Review: ☐ N/A ☒ Unclassified ☐ UCNI ☐ Classified _____

Name (print)	Z#	Signature	Date
Teri Tingey	200975	/s/ Teri Tingey	06/03/14

Working Copy / Information Only (circle one)

Initials / Date: _____/_____

This document fully satisfies the requirements of P300, Integrated Work Management, in order to systematically describe the work activity, the associated hazards, and the controls that **MUST** be employed to mitigate the risks.

REVISION HISTORY

Document Number	Issue Date	Action	Description
EP-AREAG-WO-DOP-0216, R 0	November 20, 2009	New Document	
EP-AREAG-WO-DOP-0216, R 1	Approved for Training	Major Revision	Revised procedure to add steps to perform VOC monitoring if required by supervision or IH. Updated the Field Preparation section to include procedures EP-DIV-AP-0108 and EP-AREAG-WO-DOP-0218. Updated and corrected the appropriate responsibilities throughout the document. Adjusted steps in section 8 to match the appropriate signoff on Attachment 1. Added, modified, deleted, or moved steps as necessary throughout the procedure to incorporate process improvement. Made editorial corrections as necessary. No new hazards are being introduced as a result of this revision.
EP-AREAG-WO-DOP-0216, R.2	12/21/09	Major Revision	Added step 7.5[E] to document the defective daughter drum item or entire assembly on Attachment 2. Updated the Reference section. Reworded step throughout to ensure that an NCR is initiated. Added additional substeps to step 8[5] to be consistent. Added steps to document the PE-Ci MAR and FGE value on the applicable attachments and to disposition the batch of drums versus the individual drum. Reworded step 13[2] to replace the new ring and bolt in accordance with Section 12 to ensure that Type 7A drum is properly torqued. Made editorial corrections as necessary. No new hazards are being introduced as a result of this revision.
EP-AREAG-WO-DOP-0216, R.3	1/11/2010	Major Revision	Added additional steps in section 10 for dispositioning of pressurized and other PID items to ensure that the hazardous waste labels and EPA codes are properly documented. Added steps in sections 10 and 12 to document lead/acid batteries and PCBs for dispositioning to ensure that the correct EPA code is applied and hazardous waste containers are properly identified. Made editorial corrections as necessary. No new hazards are being introduced as a result of this revision.

REVISION HISTORY (continued)

Document Number	Issue Date	Action	Description
EP-AREAG-WO-DOP-0216, R 4	February 19, 2010	Major Revision	Revised procedure to delete Attachment 10 and record pertinent information on Attachment 5. Reworded the 8th bullet on page 9. Reworded Step 6.3[2] to ensure that the applicable round sheet is completed. Added a new Step 6.3[11] to check SAT that Section 6 is completed on Attachment 4. Added a new note 5 on page 36. Added a new step 10[37]. Clarified Step 11.2[12] to torque the POC to 40 – 45 ft-lb. Deleted the 3rd bullet on Step 12[10] for torqueing a POC. Added N/A for steps that are not applicable on Attachment 4. Deleted Step 12[30]. Added steps to disposition containers that are less than 4 liters in section 10. Made editorial corrections as necessary. No new hazards are being introduced by this revision.
EP-AREAG-WO-DOP-0216, R.5	March 4, 2010	Minor Revision	Revise procedure to use a 90 mil plastic liner or the fiberboard liner in Step 7[30]. Add the 90 mil plastic liner to Section 6.2.3, Consumables. Made editorial corrections as necessary.
EP-AREAG-WO-DOP-0216, R.6	March 23, 2010	Minor Revision	Revise procedure to remove the duplication of labeling on overpacks containing empty drums. Make editorial corrections as necessary such as adding a disposition section. This revision does <u>not</u> introduce nay new hazards.
EP-AREAG-WO-DOP-0216, R.7	May 20, 2010	Major Revision	Revise procedure to incorporate instructions for addressing the sparking of material (2010-437), sharp surfaces on drums (2010-111), and drum O-ring bag inspections (2010-113). Make editorial corrections as necessary such as adding informational notes and correcting numbering. Ensure that NCR requirements are applied consistently. Reorder some steps. Remove labeling instructions and add reference to WDP Division Labeling procedure. No new hazards are being introduced by this revision.

REVISION HISTORY (continued)

Document Number	Issue Date	Action	Description
EP-AREAG-WO-DOP-0216, R.8	June 1, 2010	Minor Revision	Revise procedure to add a conditional step in section 8 to document the drums being batched in building 412 are drums listed on attachment 1 since scanning is not applicable in 412. Added a note prior to Step 12[20] that waste containers cannot be scanned out of building 412 as scanning is not applicable in 412. Added a new conditional step in section 12 to place drums in the storage area when being processed out of building 412. Added additional precaution and limitations for tripping hazards and using electrical spider boxes in Building 412. Made editorial corrections and deleted the reference to the Permacon on Attachment 1. No new hazards are being introduced by this revision.
EP-AREAG-WO-DOP-0216, R.9	June 10, 2010	Minor Revision	Added clarification to Step 9[37] regarding dispositioning of 85-gal drums. Swapped order of steps 10[42] and 10[43]. Removed "IF" requirement from step 12[19]. No new hazards are being introduced by this revision. This revision did not change the original purpose, scope, or intent of the approved document.
EP-AREAG-WO-DOP-0216, R.10	June 14, 2010	Minor Revision	Delete step 6.3[12][A] to ensure that one of the TA-54-412 rollup doors is closed as Radiation Protection determined it was not necessary. Made editorial corrections, as necessary. No new hazards are being introduced by this revision. This revision does not change the original purpose, scope, or intent of the approved document.
EP-AREAG-WO-DOP-0216, R.11	August 12, 2010	Major Revision	Revise procedure to incorporate the SSSR requirements from the Area G TSR page change. These changes include increasing the SSSR Process Area PE-Ci limit to 2.5 PE-Ci and the Area G SSSR activity limit of 5 SSSR activities. While the allowable PE-Ci value is being increased no new hazards are being introduced by this revision. Make editorial corrections, as necessary, such new ConOps format. Revise procedure to incorporate WIPP WAC changes. This revision is a total rewrite and revision bars have been omitted.

REVISION HISTORY (continued)

Document Number	Issue Date	Action	Description
EP-AREAG-WO-DOP-0216, R.12	September 21, 2010	Minor Revision	Revise procedure to incorporate the SSSR Process Area boundary drawing and add emphasis to the requirement that daughter drums are only to contain the contents of a single parent drum. Make editorial corrections as necessary. No new hazards are being introduced by this revision. This revision does not change the original purpose, scope, or intent of the approved document.
EP-AREAG-WO-DOP-0216, R.13	February 11, 2011	Major Revision	Revise procedure to incorporate TSR Page Change 25 and remove requirement for VOC sampling since the ventilation system is vented outside of the structure. Make editorial corrections as necessary. No new hazards are being introduced by this revision.
EP-AREAG-WO-DOP-0216, R.14	March 28, 2011	Major Revision	Revise procedure to incorporate additional waste drum inspections, precautions associated with self-tapping filters, and corrections to the SSSR Process Area layout (PFITS Issue 2010-2739). Make editorial corrections as necessary (e.g., change title). No new hazards are being introduced by this revision.
EP-AREAG-WO-DOP-0216, R.15	May 23, 2011	Major Revision	Revise procedure to incorporate Revision 0.26 to the Area G TSRs. Incorporate editorial corrections as necessary. This revision does not introduce any new hazards.
EP-AREAG-WO-DOP-0216, R.16	October 23, 2012	Major Revision	Revise procedure to implement requirements in Area G TSR Page Change R.0.32 to increase SSSR MAR limit to 18 PE-Ci. Modified title of procedure. Deleted sections and corresponding attachments for drum preparation, unloading drum overpacks, and drum closure; these activities are performed using EP-AREAG-WO-DOP-0211, TA-54 Area G TRU SWB/Drum Operations. Reformatted and made editorial corrections as necessary (e.g., updated division titles and references). This revision does not introduce any new hazards. This revision is a total rewrite and revision bars have been omitted.

REVISION HISTORY (continued)

Document Number	Issue Date	Action	Description
EP-AREAG-WO-DOP-1084, R.0	September 30, 2013	Major Revision	Revise procedure to incorporate requirements of ABD-WFM-002 Rev 2.0 Technical Safety Requirements (TSRs) for Technical Area 54, Area G. No new hazards are introduced by this revision. Document number changed; therefore, revision number reverted to zero.
EP-AREAG-WO-DOP-1084, R.1	November 22, 2013	Major Revision	Revise procedure to incorporate operational changes for efficiency and simplicity. Delete POC sections and refer to EP-AREAG-WO-DOP-1015. Incorporate correct CSLA (NCS-CSLA-13-067). No new hazards are introduced by this revision. This revision is a total rewrite and revision bars have been omitted.
EP-AREAG-WO-DOP-1084, R.2	February 20, 2014	Major Revision	Revise procedure to allow for moving closed TRU daughter waste containers from the SSSR process area to either staging or other location outside of the CA but within the SSSR AREA. Revise procedure to capture the P101-4 and P101-25 requirements for ordinary and critical lifts. Revise procedure to incorporate NCS-CSLA-14-001. Make editorial corrections as necessary. This revision is a total rewrite and revision bars have been omitted. This revision does not introduce any new hazards.
EP-AREAG-WO-DOP-1084, R.2 IPC-1	February 26, 2014	Major Revision	Revise procedure to allow for daughter waste containers other than a drum. Make editorial corrections as necessary. This revision does not introduce any new hazards.
EP-AREAG-WO-DOP-1084, R.3	February 28, 2014	Major Revision	Revise procedure to incorporate instructions for the implementation of the Area G Page Change 2.3 (e.g. change SR 4.1.1 to SR 4.1.1.1). Make editorial corrections as necessary. This revision does not introduce any new hazards.
EP-AREAG-WO-DOP-1084, R.3 IPC-1	March 4, 2014	IPC	Revise procedure to allow flexibility for bagging on the parent and daughter drums. This revision does not introduce any new hazards.
EP-AREAG-WO-DOP-1084, R.4	June 6, 2014	Major Revision	Revise procedure to incorporate RCRA requirements. Lower hydrogen and VOC levels to 3.2% and 6,400 ppm, respectively. Make editorial corrections as necessary. This revision does not introduce any new hazards.

TABLE OF CONTENTS

Section Page

TITLE PAGE 1
REVISION HISTORY 2
TABLE OF CONTENTS 7

1. PURPOSE 8

2. SCOPE 8

3. PRECAUTIONS AND LIMITATIONS 8

4. PREREQUISITE ACTIONS 17
4.1 Planning and Coordination 17
4.2 Special Tools and Equipment, Parts, and Supplies 18
4.2.1 Measurement and Test Equipment (M&TE) 18
4.2.2 Special Tools and Equipment 19
4.2.3 Consumables 20
4.3 Field Preparation 21

5. INSTRUCTIONS—PROHIBITED ITEM DISPOSITION 24

6. INSTRUCTIONS—SECURING ENCLOSURE WITH IN-PROCESS WASTE CONTAINER 53

7. POST-PERFORMANCE ACTIVITIES 55
7.1 Disposition 55
7.2 Records Processing 57

8. REFERENCES 57

Appendixes
Appendix 1, List of Prohibited Items 59
Appendix 2, TRU Waste Container Inner Package Confinement Layer Worksheet 60

Attachments
Attachment 1, TA-54 Area G Drum Prohibited Item Disposition Worksheet 61
Attachment 2, TA-54 Area G Drum Confinement Layer Worksheet 65
Attachment 3, TA-54 Area G Drum Prohibited Item Collection Container Data Sheet 66
Attachment 4, TA-54 Area G POC Waste Logsheet 67
Attachment 5, TA-54 Area G TRU Drum SSSR Activity Secure Enclosure Data Sheet 68
Attachment 6, TA-54 Area G Empty Container Data Sheet 69

1. PURPOSE

This procedure provides instructions for sorting, segregating, size reduction, and repackaging (SSSR) activities associated with transuranic (TRU) waste drums that contain Waste Isolation Pilot Plant (WIPP) non-conforming items at Technical Area 54.

2. SCOPE

This procedure applies to Los Alamos National Laboratory (LANL) and subcontractor personnel who perform SSSR activities on TRU waste drums. Personnel place the waste into WIPP-approved packages.

This procedure provides instructions for remediating TRU waste drums. TRU oversized containers are processed in accordance with EP-AREAG-WO-DOP-1091, TA-54 Area G TRU Oversized Container SSSR Activities.

Drum preparation, unloading overpack drums, and drum closure activities are performed in accordance with EP-AREAG-WO-DOP-1069, TA-54 Area G TRU SWB/Drum Operations.

This procedure is performed in conjunction with the Waste Compliance and Tracking System (WCATS), in order to populate WCATS with waste container information, to generate TRU Waste Storage Records (TWSRs), to generate labels, and to associate new daughter waste containers with the parent waste container.

The SSSR AREA boundary is the same as the DEFINED AREA boundary and the SSSR staging area for the SSSR process area (e.g., contamination control enclosure) is within the boundary of the DEFINED AREA.

This procedure does not provide instructions and steps for processing drums discovered as bulging or unvented drums.

This procedure does not contain instructions for the remediation of sealed containers permitted by Specific Administrative Control (SAC) 5.7.18.

3. PRECAUTIONS AND LIMITATIONS

- Activities, items, and containers **SHALL** satisfy approved design specification, regulatory requirements, process-specific parameters, and procedural requirements. Activities, items, or containers that do not conform to the approved specifications and requirements are considered nonconforming and Nonconformance Reports (NCRs) **SHALL** be generated in accordance with P330-6, Nonconformance Reporting, as required.

3. PRECAUTIONS AND LIMITATIONS (continued)

- Avoid slips, trips, and falls by wearing the proper footwear with slip-resistant soles and using handrails when using stairs. Use established pathways when available and avoid walking on uneven or unstable surfaces.

- When a worker observes an unsafe condition or act that may pose an imminent danger or other safety concern/hazard, the worker has the authority and responsibility to inform the worker engaged in the work and request that the work activity be paused and/or stopped based on the risk posed to the individual, the employees, the environment, or the facility in accordance with P101-18, Procedure for Pause/Stop Work.

- This procedure contains steps marked with **($)** required to implement key requirements such as the TA-54 Area G Safety Basis requirements (e.g., TSR). These steps may not be changed without engineering approval to ensure the requirements are maintained.

- Those steps of the procedure that are the direct implementation of a criticality safety administrative requirement are identified by a **(*)** and circle-CS symbol (CS) to the left of the step. These steps alert the user that the identified step is part of assuring compliance with criticality safety limits. The identified steps are of equal importance to all other steps from a criticality safety perspective.

- Comply with TA-54 building access requirements, including those established by the Radiological Control Technician (RCT) [e.g., requirements in radiological work permits (RWPs)].

- To comply with the intent of the As Low As Reasonably Achievable (ALARA) Program, all personnel **SHALL** apply the principles of time, distance, and shielding when working with radiological materials.

- Do not disturb or touch wild animals, dead animals, nesting areas, droppings, or surfaces with mold growth to avoid exposure to biological threats (e.g., snakes, rodents, rodent droppings, Hanta virus, Bubonic plague, spiders, West Nile virus, molds).

- **($)** Each SSSR AREA **SHALL** contain less than or equal to 18 PE-Ci EQUIVALENT COMBUSTIBLE WASTE, in-process. [LCO 3.1.1(1)]

- **($)** A spotter **SHALL** be present for TRU waste container lifts planned to exceed 4 ft above the ground surface. If the planned lift will exceed 12 ft from the bottom of the container to the ground, a critical lift plan **SHALL** be used. [Specific Administrative Control. (SAC) 5.7.8(1) and 5.7.8(2)]

3. PRECAUTIONS AND LIMITATIONS (continued)

NOTE *Daughter containers created during the SSSR process may be considered "In-Process" until they are removed from the SSSR AREA even though they may be sealed or closed. See Basis A.3.1.1 for a detailed discussion.*

- **($)** Each SSSR AREA **SHALL** contain less than or equal to 18 PE-Ci EQUIVALENT COMBUSTIBLE WASTE, staged in closed containers. [LCO 3.1.1(2)]

NOTE *A STATIONARY FIRE WATCH is a person stationed at a specific location with no other assigned duties than the purpose of making fire safety observations, notifying building occupants and the fire department of an emergency, preventing a fire from occurring, and/or extinguishing small fires as trained.*

- **($)** An SSSR AREA **SHALL** satisfy the following applicable minimum Thermal Separation Distance requirements: (LCO 3.2.1)
  - 24 ft with non-METAL CONTAINERS
  - 10 ft with non-METAL CONTAINERS with an established STATIONARY FIRE WATCH
  - 10 ft with METAL CONTAINERS

- The Combustible Restricted Area (CRA) is an area that is around and encloses a DEFINED AREA where TRANSIENT COMBUSTIBLES and combustible/flammable liquids are strictly controlled to minimize potential of possible fire incidents. The CRA is marked on controlled engineering approved drawings and is approximated by markings in the field. The markings do not have to exactly represent the drawing, but should closely represent the drawing.

- **($)** Within the DEFINED AREA and associated CRA boundary, Combustible/Flammable Liquids **SHALL** be controlled in accordance with EP-AREAG-FO-AP-1097, TA-54 Area G Combustible/Flammable Liquid Control. (LCO 3.3.1)

- **($)** A continuous STATIONARY FIRE WATCH **SHALL** be present within the SSSR process area (e.g., contamination control enclosure) whenever TRU WASTE is exposed. He or she **SHALL** have no other assigned duties than making fire safety observations, notifying building occupants and the fire department of an emergency, preventing a fire from occurring, and/or extinguishing small fires as trained. (SAC 5.7.17)

3. PRECAUTIONS AND LIMITATIONS (continued)

- TRU waste outside of a container is considered exposed. TRU waste covered by a fire blanket or other fire retardant material is sufficiently protected from a potential fire and is not considered exposed.

- Seek shelter in a grounded building or vehicle during lightning or inclement weather.

- Personnel protective equipment (PPE) **SHALL** be worn (e.g., safety shoes, safety glasses with side shields, cut resistance gloves, respirator, and hearing protection) as required by the RWP and hazard analysis.

- Manual lifts **SHALL** be performed in accordance with the policy statement in EP-DIV-POLICY-20057, EWMO Health and Safety Policy – Manual Movement.

- Do not manipulate drum casters with feet or hands; always use an approved tool.

- Only trained and qualified personnel authorized by the supervisor may approach an elevated drum/rigid liner.

- When using the impact wrench to remove the slack on the ringbolt, **DO** not run the bolt tight against the stop. Doing so may cause an over-torque condition. A torque wrench **SHALL** be used to make and verify the torque.

- When work cannot be accomplished as described in this procedure, or accomplishment of such work would result in an undesirable situation, a condition adverse to quality, or an unacceptable safety risk, the work **SHALL** be stopped and suspended until the appropriate change provisions are implemented. In the event of suspended operations, notify the Los Alamos National Laboratory Transuranic Waste Program – Drum Disposition Project (LTP-DDP) Operations Manager and the TA-54 Operations Center.

- If using an impact wrench to remove a drum ring, use a wrench to hold the lock-nut. Do not use fingers.

- Personnel should be adequately hydrated before and after work period.

- Disconnect electrical tools from power source before changing accessories.

3. PRECAUTIONS AND LIMITATIONS (continued)

- Ensure electrical tools satisfy National Electrical Code (NEC) or Underwriters Laboratories (UL) requirements and are double insulated or properly grounded and inspected before use unless ESO approved

- When working in Building TA-54-412, all electrical tools **SHALL** be plugged directly into the Spider Boxes.

- Personnel **SHALL** determine a Myers drum from a Skolnik drum by the UN stamp located on the drum, as follows:
  - Myers Drum - M020 or MXXX
  - Skolnik Drum - SDCC

- All drums to be processed **SHALL** have a Los Alamos National Laboratory Transuranic Waste Program (LTP) Waste Remediation Safety Evaluation Data Sheet (EP-DIV-AP-20098, Attachment 1) that has been reviewed and approved by TRU Operations.

- Sharp objects **SHALL** be covered and properly stored when <u>not</u> in use. Wear cut/puncture resistant gloves (e.g., HexArmor) and cut away from your body.

- All waste with sharp edges that exits the glovebag **SHALL** be covered to prevent damage to the glovebag and gloveports.

- All sharp objects that are introduced inside the glovebag/glovebox **SHALL** be properly identified and stored when <u>not</u> in use to prevent tears or punctures to the glovebag and personnel injuries (e.g., cuts or punctures).

- Glovebag operations **SHALL** <u>not</u> be performed within a glovebag if the environmental temperature is less than 55 °F in order to prevent glovebag damage due to the plastic material becoming too brittle to withstand abrasion or impact without damage.

- The desired glovebag/glovebox process operating temperature range is 60°F to 100°F based on ergonomic considerations and historical experience with the Waste Characterization, Reduction, and Repackaging Facility (WCRRF). This temperature range ensures the proper functioning of radiation protection materials (i.e., tape and glovebag).

3. PRECAUTIONS AND LIMITATIONS (continued)

CS

- **(*)** The waste contents from multiple parent drums **SHALL** not be placed into a single daughter drum [not applicable for Prohibited Item Disposition (PID) collection containers]. (NCS-CSLA-14-001)

CS

- **(*)** No drums greater than 200 FGE will be remediated in this process. (NCS-CSLA-14-001)

CS

- **(*)** No drums less than 55 gal size will be remediated with this process. (NCS-CSLA-14-001)

CS

- **(*)** Only one parent waste container at a time may be present within an SSSR process area (e.g., contamination control enclosure) that does not have physically separated work areas (e.g., cells). (NCS-CSLA-14-001)

CS

- **(*)** Only the liquid waste from a single parent container may be accumulated within a daughter container (e.g., vacuum) and the liquid may not be absorbed or mixed with solid waste (e.g., sawdust or metal shavings). Absorbed liquid may be mixed with solid waste from the same parent container. (NCS-CSLA-14-001)

CS

- **(*)** Upon the discovery of greater than 5 liters (approximately 1.3 gal) of containerized, radioactive liquid, work **SHALL** be paused until an assessment is conducted with the participation of criticality safety personnel. While there is no expectation that containers will unexpectedly contain fissionable material solutions, this is a good safety practice from a criticality safety perspective due to criticality safety concerns with unexpected liquids. Known liquids of any volume may be processed in accordance with this procedure.

- Glass sample vials may contain residual granular materials which can generate sparks when subjected to mechanical agitation. To reduce the possibility of breaking a glass sample vial and the generation of sparks, glass sample vials **SHALL** be handled with care and void volume reduction activities **SHALL** be performed without excessive force. (EP-DIV-REPORT-09)

- Activities such as forklift operations **SHALL** be minimized when operations (e.g., SSSR prohibited item disposition) are being performed within a contamination controlled enclosure (TA-54-412 tent) in order to reduce the possibility of the breach of the enclosure and personnel injuries.

3. PRECAUTIONS AND LIMITATIONS (continued)

- The most current list of WIPP-approved filtered vents are on DOE/WIPP 11-3384, CBFO Approved Filter Vents.

- Not Applicable (N/A) is documented on the attachments during the performance of this procedure indicating information that is not required to be recorded.

- Support Services Subcontractors executing this procedure **SHALL** comply with the safety and health requirements documented in contractual agreements with the LANL.

- All critical lift plans executed by LANL personnel **SHALL** be developed using Attachment B, LANL Critical Lift Plan, of P101-25, Cranes, Hoists, Lifting Devices, and Rigging Equipment.

- The instructions in this procedure satisfy the P101-25 ordinary lift requirements and the use of LANL Form 1611, Ordinary Lift Procedure, is not required. Not all of the items listed on Form 1611 are captured in this procedure because this procedure is performed using gantry cranes and forklifts in preapproved locations and lifts standard waste containers of a known size and volume.

- Forklift operations are governed by the LANL procedure P101-4, Forklift and Powered Industrial Trucks. P101-4 requires the completion of the applicable sections of a LANL procedure P101-25 Attachment B for critical lifts involving a forklift or powered industrial truck. Forklift operations not involving a critical lift (e.g., load suspended below the forks of the forklift) are not required to comply with the requirements of P101-25.

NOTE *The following applies to DEFINED AREAS and their associated Thermal Separation Distances, which are administratively controlled by the encompassing CRA.*

- **($)** Vehicles with greater than 100 gal tank capacity **SHALL** not enter a CRA or its associated DEFINED AREA. [Limiting Condition for Operation (LCO) 3.3.1.2] This LCO does not apply to LOW ACTIVITY AREAS.

- The Class 2 laser scanning head on the WCATS mobile device can cause eye injury if eye is exposed to the beam. Do not allow eyes of user or observers to become exposed to laser beam.

3. PRECAUTIONS AND LIMITATIONS (continued)

- If a physical transfer is postponed or does not take place for any reason after electronic processing in WCATS, then the WCATS task must be REVOKED in WCATS to cancel the move in WCATS.

- The WCATS mobile device contains lithium-ion battery. The operating temperature recommendation for the Workabout Pro 3 (WCATS mobile device) is from -4 degrees F to 122 degrees F. Do not store the WCATS mobile device where temperatures are less than -40 °F or greater than 140 °F. Exposure to extreme temperatures (greater than 140 °F) may cause battery to explode. Keep mobile device out of direct sunlight for extended periods of time when not in use. Do not incinerate, mutilate, short circuit, or disassemble the battery pack. Do not dispose of in municipal waste receptacles. Dispose of in properly marked universal waste disposal areas.

- WCATS is designed to allow any task performed on the WCATS mobile device to be conducted from the WCATS desktop application. This feature provides additional flexibility in the event the WCATS mobile device becomes inoperable or malfunctions or the operator may choose to perform a task using either method.

- Compliance with LCO 3.2.1 and the performance of SR 4.2.1.1 for the thermal separation distance are not verified during the performance of this procedure because of the design of the DEFINED AREAS. All DEFINED AREAS are created specifically for receiving either a METAL CONTAINER or non-METAL CONTAINER and WCATS assures compliance by not authorizing a non-METAL CONTAINER to be moved into a METAL CONTAINER only DEFINED AREA. However, a METAL CONTAINER may be moved into a non-METAL CONTAINER DEFINED AREA because the thermal separation distance requirements of the non-METAL CONTAINER DEFINED AREA are greater that the thermal separation distance requirements of the METAL CONTAINER.

- Compliance with LCO 3.1.1 is that each SSSR AREA may contain less than or equal to 18 PE-Ci EQUIVALENT COMBUSTIBLE WASTE in process and less than or equal to 18 PE-Ci EQUIVALENT COMBUSTIBLE WASTE staged in closed containers. The location of the in-process and closed staged waste containers is not stipulated by the Area G TSR other than within the SSSR AREA and therefore closed in-process daughter containers could coexist with closed staged containers outside of the SSSR process area (lower case process area) such as outside of a contamination control enclosure.

3. PRECAUTIONS AND LIMITATIONS (continued)

- Parent waste containers should be remediated within the shift, if possible. Parent and daughter waste containers may remain open as long as the contents of the containers are being remediated/repackaged (e.g., waste may be partially size reduced or daughter containers are accumulating waste). During planned maintenance evolutions or long, planned LANL closures (e.g., winter break) parent and daughter containers will be closed and compliant with the Resource Conservation and Recovery Act (RCRA) Permit storage requirements. If a waste container, its waste, or the daughter container are anticipated to remain open or in-process longer than seven days during an unplanned outage, then notify an Environmental Professional [Regulatory Management & Performance – Regulatory Support & Performance (REG-SP)]. REG-SP Environmental Professional will coordinate with ENV-RCRA for any record keeping or internal/external regulatory notifications requirements. (EP2011-5332)

- The lifting of drums using the drum hauler unit **SHALL** <u>not</u> exceed 600 lb.

- ($) LCO 3.1.7 requiring that above-ground TRU waste drums with greater than or equal to 200 PE-Ci be DOUBLEPACKED is <u>not applicable</u> to SSSR activities. (LCO 3.1.7)

- Actions that could lead to reactions between ignitable or reactive waste could result in the following and **SHALL** be avoided:
  - Generation of extreme heat, pressure, fire, explosions, or violent reactions
  - Production of uncontrolled toxic mist, fumes, dusts, or gases in sufficient quantities to threaten human health or the environment
  - Production of uncontrolled inflammable fumes or gases in sufficient quantities to pose a risk of fire or explosions
  - Damage to the structural integrity of the container, tank, permitted unit, or other structure associated with the permitted unit
  - A threat to human health or the environment

- Ignitable or reactive wastes **SHALL** be segregated or separated and protected from sources of ignition or reaction such as cutting and welding, frictional heat, sparks, spontaneous ignition, and radiant heat.

4. PREREQUISITE ACTIONS

NOTE *The prerequisite actions may be completed in any order.*

4.1 Planning and Coordination

Supervisor or designee

[1] **ENSURE** that the procedure is the latest revision, and **IDENTIFY** this document as Working Copy or Information Only on the Title Page.

[2] **ENSURE** that SSSR activities are scheduled on the TA-54 Area G facility schedule.

[3] **ENSURE** that an RWP for the planned activity has been issued.

[4] **ENSURE** that, as a minimum, the following personnel, trained in the use of this procedure, are available for this procedure, as required:

- Two Operators
- RCTs as required by RWP
- One Supervisor
- **($)** One STATIONARY FIRE WATCH personnel whenever TRU WASTE is exposed [LCO 3.2.1(3) and SAC 5.7.17]

[5] **ENSURE** that a pre-job briefing is conducted for all personnel involved in the performance of this procedure in accordance with EP-DIV-AP-0112, EWMO Pre-Job Briefings, or other approved process.

[6] **VERIFY** the following with the TA-54 Operations Center:

- DEFINED AREAS involved in the work activities are in the OPERATION MODE.
- Area G is in Staffing Condition 1 (one), as defined in EP-DIV-AP-20059, EWMO Watchbill Administration.

[7] **ENSURE** that a completed LTP Waste Remediation Safety Evaluation Data Sheet (EP-DIV-AP-20098 Attachment 1) has been obtained for each waste container to be processed in accordance with EP-DIV-AP-20098, LTP TRU Waste Remediation Safety Evaluation.

4.1 Planning and Coordination (continue)

NOTE *Typically remediation operations within the SSSR AREA will not involve the deliberate generation of sparks or flames and therefore a standing Spark- Or Flame-Producing Operations Permit is not required but instead a Spark- Or Flame-Producing Operations Permit will be generated on a case-by-case basis.*

[8] **IF** the SSSR activity requires the generation of sparks or flames (e.g., grinding, cutting, or burning),
THEN ENSURE that a Spark- Or Flame-Producing Operations Permit (Form 1563) and required signatures have been obtained in accordance with P101-26, Welding, Cutting, and Other Spark or Flame Producing Operations.

CS

[9] **(*) IF** a known volume of containerized radioactive liquid is to be remediated,
AND the volume of radioactive liquid is known to be greater than approximately 5 liters (~1.3 gal),
THEN ENSURE that the LTP-DDP Operations Manager, Criticality Safety Officer (CSO), and Nuclear Criticality Safety Division (NCSD) have been notified and have provided documented guidance for the remediation of the container and liquid.

[10] **ENSURE** that the TRU daughter waste container labels (e.g., Shorty barcode labels) have been obtained from the Waste Help Team (wastehelp@lanl.gov), as necessary.

4.2 Special Tools and Equipment, Parts, and Supplies

NOTE 1 *The list of special tools and equipment, parts, and supplies is not an all inclusive list and additional tools and equipment may be used as necessary.*

NOTE 2 *Torque wrenches are calibrated either as a percentage of full scale or a percentage of indicated value. The torque wrench accuracy information is found on the Calibration Certificate document. Torque wrenches are not calibrated in, nor are they to be used below 20% of their full range.*

4.2.1 Measurement and Test Equipment (M&TE)

Waste Handling Operator

[1] **ENSURE** that the following measuring and test equipment are available, as required:
- Calibrated scale capable of measuring 1,400 lb
- Calibrated torque wrench capable of torqueing to 120 in-lb
- Calibrated torque wrench capable of torqueing to 75 ft-lb

4.2.1 Measurement and Test Equipment (M&TE) (continued)

[2] **IF** a calibration date has expired,
THEN:

[A] **TAG** the equipment Out-of-Service.

[B] **NOTIFY** supervision for the applicable actions.

4.2.2 Special Tools and Equipment

NOTE 1 *The list of special tools and equipment is not an all inclusive list and additional tools and equipment may be used as necessary.*

NOTE 2 *The use of battery operated power tools is the preferred method.*

Waste Handling Operator

[1] **ENSURE** that the following special tools and equipment are available, as required:

- Hand drill
- Casters
- Cutting ratchet/knife
- Certified Drum Lift/Tilt Unit
- Certified hoisting and rigging equipment
- Certified crane
- Certified wet/dry vacuum with a high efficiency particulate air (HEPA) filter and attachments
- Certified Local Exhaust Ventilation Unit (to be used as required by the RCT and RWP)
- Elephant trunks
- Computer/printer
- Can opener
- Hoe
- Small broom for glovebag/glovebox
- Dust pan
- Slow-speed metal size reduction tools (e.g., nibblers, shears, crimpers, and pipe wheel cutters)
- Vice grips or equivalent
- Channel locks or equivalent
- Grinder with grinding wheel or reciprocating saw with metal blade

4.2.2 Special Tools and Equipment (continued)

- Electric hand drill and bits (e.g., hole saw)
- Reciprocating saw and blades
- Dead blow mallet
- Impact wrench
- Drum lid prying tool
- Miscellaneous hand tools (e.g., sockets and wrenches)
- Drum overpacking device
- Anti-fatigue mats
- Kevlar® sleeves
- Jigsaw and blades
- Portaband and blades
- Fire blankets, Metal X fire extinguishers, and ABC fire extinguishers (STATIONARY FIRE WATCH use)
- Certified containment glovebag or glovebox

NOTE *An F130N Self-contained Electro Hydraulic Cutting Tool contains approximately 0.16 gal of hydraulic fluid which has been evaluated for flammability and determined to <u>not</u> require documentation in accordance with EP-AREAG-FO-AP-1072, TA-54 Area G SSSR Area TRU MAR Inventory Control.*

- Hydraulic Shears (e.g., F130N Self-contained Electro Hydraulic cutting Tool or equivalent)
- Peristaltic pump
- Face shield or equivalent
- WCATS mobile device

4.2.3 Consumables

NOTE *The list of consumables is <u>not</u> an all inclusive list and additional consumables may be used as necessary.*

Waste Handling Operator

[1] **ENSURE** that the following consumables are available, as required:

- Waterproof vacuum bags to line the wet/dry HEPA vacuum (e.g., plastic bag)
- Absorbent material (e.g., kitty litter, absorbent pads, etc.)
- Organic Absorbent (Kitty Litter/Zeolite® absorbent for Nitrate Salt)
- Liner bags approved for use with HEPA vacuum

4.2.3 Consumables (continued)

- Kimwipes or equivalent
- Personnel Protective Equipment
- Poly Liner (e.g., 90 mil plastic liner)/Fiberboard Liner
- Tape
- Cut-Resistant Gloves (e.g., leather gloves or HexArmor®)
- Nitrile gloves or equivalent
- Cutting tool (e.g., utility knife)
- Filtered Bags
- Thread-locker (Loctite™ 271 or Loctite™ 680 or equivalent)
- Room Temperature Vulcanized (RTV)-732 or equivalent
- WIPP-approved filtered vent (e.g., NucFil 019 or NucFil 019DS)
- Radioactive labels
- All-in-One labels
- Type 7A daughter drums
- Type 7A 55-gal drum lids
- Type 7A overpack drum and lid
- Litmus paper
- Fire extinguishing agents (Fire Extinguisher, Type ABC)
- Wetting agent
- Permanent marker
- Peristaltic pump tubing

4.3 Field Preparation

Supervisor or designee

[1] **IF** the waste from a 55-gal parent drum is to be remediated within a glovebox or glovebag,
THEN ENSURE that glovebag/glovebox inspections are completed in accordance with EP-AREAG-WO-DOP-1161, TA-54 Area G TRU Waste Glovebag Operations, and EP-DIV-AP-20047, LTP Glovebox/Glovebag and Glove Safety Program, as required.

[2] **ENSURE** that the applicable round sheet is completed for the work location:
- EP-AREAG-WO-DOP-1162, TA-54-231 Area G Dome 231 PermaCon Round Sheet
- EP-AREAG-WO-DOP-0220, TA-54 Area G Building 412 Containment Tent Operator Round Sheet)
- EP-AREAG-WO-DOP-1061, TA-54 Area G Dome 375 PermaCon Operator Round Sheet

4.3 Field Preparation (continued)

[3] **ENSURE** that the applicable inspection sheet is completed for the work locations in accordance with EP-AREAG-FO-DOP-1087, TA-54 Work Release Inspection Sheets.

[4] **ENSURE** that the applicable hydrogen/volatile organic compounds (VOC) documentation for the batch of drums is provided and indicates a value of less than 3.2% for hydrogen and less than 6,400 ppm for VOCs.

CS [5] **(*) ENSURE** that the waste containers to be moved into the SSSR AREA have been batched in accordance with EP-AREAG-FO-AP-1072. (NCS-CSLA-14-001)

[6] **IF** performing SSSR activities in a radiological contamination control tent,
THEN:

[A] **ENSURE** that the initial contamination control enclosure approval has been completed in accordance with RP-1-DP-65, Radiological Containments, as required.

NOTE *In accordance with RP-1-DP-65 a containment tent that is in place for greater than 30 days **SHALL** be re-inspected by the Fire Protection Engineer at an interval not to exceed 45 days which is documented on the daily inspection checklist.*

[B] **ENSURE** that the contamination controlled enclosure (tent) has been inspected in accordance with RP-1-DP-65.

[C] **ENSURE** that activities outside of the contamination controlled enclosure (tent), such as forklift operations, have been minimized.

[7] **IF** Section 5, Prohibited Item Disposition, is to be performed,
THEN:

[A] **($) ENSURE** that the total volume of flammable liquids within the boundaries of the SSSR AREA for operation and maintenance activities is less than or equal to seven gallons, and **CHECK** (√) SAT or UNSAT on Attachment 1, TA-54 Area G Drum Prohibited Item Disposition Worksheet, or Attachment 2, TA-54 Area G Drum Confinement Layer Worksheet, as applicable. [LCO 3.3.1(1a)]

4.3 Field Preparation (continued)

[B] **ENSURE** that the hoisting and rigging materials (e.g., crane and strapping) preoperational and monthly inspections have been completed and are current in accordance with P101-25, as necessary.

[8] **ENSURE** that Prohibited Item Collection Containers (aerosol and pressurized cylinders) or previously initiated Prohibited Item Collection Containers are available, as necessary.

NOTE *The daughter waste containers (e.g., 55-gal drums) may be prepared in advance of the waste container remediation activity and at a location other than the SSSR AREA. As such the lids may be temporarily placed on the daughter waste containers to allow them to be safely transported to the SSSR AREA.*

[9] **ENSURE** that a sufficient number of daughter waste containers (e.g., 55-gal drums) are available, as necessary, and have been prepared in accordance with EP-AREAG-WO-DOP-1069 in order to receive the waste material.

[10] **ENSURE** that the new TRU daughter waste containers have been created in WCATS using the TRU DRUM PREPARATION application and that the Shorty barcode labels have been applied to the new TRU daughter waste containers in accordance with EP-DIV-DOP-20043, LTP TRU Waste Container Labeling.

[11] **ENSURE** that the waste containers to be processed have been moved into the applicable SSSR staging area (e.g., Building 412, Dome 231, or Dome 375).

5. INSTRUCTIONS—PROHIBITED ITEM DISPOSITION

This section is a stand-alone section and may be performed independently of, or in conjunction with other Instructions sections of this procedure.

NOTE 1 *Radiological surveys may be performed as determined necessary [e.g., by an RP representative (e.g., RCT)] any time during the performance of this procedure.*

NOTE 2 *Attachment 2 is used to document activities associated with eliminating layers of confinement in this section. All other remediation activities are document on Attachment 1, unless otherwise directed.*

Supervisor or designee

[1] **ENSURE** that the prerequisite actions have been completed.

NOTE *A STATIONARY FIRE WATCH is a person stationed at a specific location with no other assigned duties than the purpose of making fire safety observations, notifying building occupants and the fire department of an emergency, preventing a fire from occurring, and/or extinguishing small fires as trained.*

[2] **($) ENSURE** that a STATIONARY FIRE WATCH has been established in the SSSR process area (e.g., contamination control enclosure), and **DOCUMENT** on Attachment 1 or 2, as applicable. (SAC 5.7.17)

NOTE *The following step adds the PE-Ci value of the waste drums to the in-process waste container value in the WCATS database and performs SR 4.1.1.1 in order to demonstrate compliance with LCO 3.1.1.(1). The following step is performed before physically moving the waste drums into the SSSR process area (e.g., contamination control enclosure).*

[3] **($) ENSURE** that the WCATS INTRA-FACILITY TRANSFER has been completed for moving the waste drums into the SSSR process area (e.g., contamination control enclosure) using a WCATS mobile device (Grid X of IN-PROCESS). (SR 4.1.1.1)

Waste Handling Operator

CS [4] **(*) VERIFY** that there are no parent or daughter containers or parent waste in the SSSR process area (e.g., contamination control enclosure). (NCS-CSLA-14-001)

5. INSTRUCTIONS—PROHIBITED ITEM DISPOSITION (continued)

NOTE *The following step ensures that the waste drums have been physically moved into the SSSR process area (e.g., contamination control enclosure).*

[5] **ENSURE** that the 55-gal parent drums to be processed has been moved into the SSSR process area (e.g., contamination control enclosure) and removed from the OVERPACK in accordance with EP-AREAG-WO-DOP-1069 or as directed by supervision, as necessary.

[6] **RECORD** the 55-gal parent drum number (each page of Attachment 1 or 2) and remediation date was initiated on Attachment 1 or 2, as applicable.

NOTE *The RCRA Hazardous Waste Codes associated with a daughter drum may vary from the parent drum as prohibited items are removed or discovered.*

[7] **RECORD** on Attachment 1 or 2 the parent drum RCRA Hazardous Waste designation codes as found on Attachment 1 of EP-AREAG-FO-AP-1072 and the Accumulation Start Date, as applicable.

NOTE *The following step may be repeated as necessary during the drum remediation process until all of the parent TRU waste drums contents have been remediated and may be performed out of sequence (e.g., after moving TRU waste drums into the SSSR process area).*

[8] **ENSURE** that the TRU daughter waste drums and SWBs have been moved into the SSSR process area (e.g., contamination control enclosure), as necessary.

[9] **CHOCK/LOCK** drum dollies moved into the SSSR process area (e.g., contamination control enclosure), as necessary.

[10] **IF** replacing a drum lid or drum closure ring,
THEN:

[A] **PLACE** the 55-gal parent drum in front of the drum hood.

[B] **REMOVE** the drum closure ring from the 55-gal parent drum.

5. INSTRUCTIONS—PROHIBITED ITEM DISPOSITION (continued)

[C] **IF** replacing the drum closure ring,
THEN:

[a] **REPLACE** the drum closure ring.

[b] **CLOSE** the 55-gal parent drum in accordance with EP-AREAG-WO-DOP-1069, and **RETURN** to the following step.

[c] **GO** to Step 5.[60].

[D] **PARTIALLY LIFT** the 55-gal parent drum lid.

NOTE *The LTP Waste Remediation Safety Evaluation Data Sheet will indicate the presence of tritium inside of drums.*

[E] **ENSURE** that a radiological contamination survey of the underside of the 55-gal parent drum lid is performed, and **MONITOR** for tritium in those 55-gal parent drums that are listed as containing tritium.

[F] **IF** radiological contamination is detected and is <u>above</u> the RWP limits,
THEN:

[a] **CLOSE** the 55-gal parent drum in accordance with EP-AREAG-WO-DOP-1069, and **RETURN** to the following step.

[b] **NOTIFY** supervision of the discrepancy.

[c] **($) SECURE** the STATIONARY FIRE WATCH, and **DOCUMENT** on Attachment 1. (SAC 5.7.17)

[d] **IDENTIFY** (label or mark) the 55-gal parent drum that is being segregated.

[e] **RECORD** the discrepancy condition in the Comments section on Attachment 1.

[f] **PACK** the 55-gal parent drum into a Type 7A drum overpack, if required.

5. INSTRUCTIONS—PROHIBITED ITEM DISPOSITION (continued)

[g] **PROCEED** as directed by supervision.

[G] **REMOVE** the 55-gal parent drum lid and set the lid aside as directed by an RCT.

[H] **PLACE** a replacement drum lid on the 55-gal parent drum.

[I] **CLOSE** the 55-gal parent drum in accordance with EP-AREAG-WO-DOP-1069, and **RETURN** to the following step.

[J] **GO** to Step 5.[60].

NOTE 1 *When a visual examination (VE) of the daughter drum contents is to be performed, CCP personnel must be present to perform the VE in accordance with CCP-TP-113, CCP Standard Contact-Handled Waste Visual Examination, and this procedure.*

NOTE 2 *Tags are kept in a predetermined location until it has been determined that the drum will be processed and the tags are no longer required to be kept.*

[11] **IF** directed to remove the tags from the 55-gal parent drum, **THEN REMOVE** all tags from the 55-gal parent drum lid, and **PLACE** the tags in a predetermined location.

[12] **IF** the drum is to be opened to eliminate the number of confinement layers, **THEN:**

[A] **PLACE** a 55-gal parent drum in front of the drum hood.

[B] **REMOVE** the drum closure ring from the 55-gal parent drum.

[C] **PARTIALLY LIFT** the 55-gal parent drum lid.

5. INSTRUCTIONS—PROHIBITED ITEM DISPOSITION (continued)

NOTE *The LTP Waste Remediation Safety Evaluation Data Sheet will indicate the presence of tritium inside of drums.*

[D] **ENSURE** that a radiological contamination survey of the underside of the 55-gal parent drum lid is performed, and **MONITOR** for tritium in those 55-gal parent drums that are listed as containing tritium.

[E] **IF** radiological contamination is detected and is above the RWP limits,
OR an unvented 30-gal container is found,
THEN:

[a] **CLOSE** the 55-gal parent drum in accordance with EP-AREAG-WO-DOP-1069, and **RETURN** to the following step.

[b] **NOTIFY** supervision of the discrepancy.

[c] **($) SECURE** the STATIONARY FIRE WATCH, and **DOCUMENT** on Attachment 2. (SAC 5.7.17)

[d] **IDENTIFY** (label or mark) the 55-gal parent drum that is being segregated.

[e] **SEGREGATE** the 55-gal parent drum for future processing.

[f] **RECORD** the discrepancy condition in the Comments section on Attachment 2.

[g] **IF** tags were removed from the 55-gal parent drum,
THEN PLACE tags previously removed back onto 55-gal parent drum.

[h] **PACK** the 55-gal parent drum into a Type 7A drum overpack, if required.

[i] **PROCEED** as directed by supervision.

[F] **REMOVE** the 55-gal parent drum lid and set the lid aside as directed by an RCT.

[G] **REPOSITION** the drum hood, as necessary.

5. INSTRUCTIONS—PROHIBITED ITEM DISPOSITION (continued)

[H] **VISUALLY INSPECT** and **VERIFY** that there are no hazards associated with eliminating the layers of confinement.

[I] **ENSURE** that CCP-TP-113 is performed concurrently with this procedure, as necessary.

[J] **ESTIMATE** the initial number of confinement layers (e.g., cut plastic bags) as directed by supervision, and **RECORD** the total number of confinement layers on Attachment 2.

[K] **ELIMINATE** the confinement layers as directed by supervision and an RCT, and **DOCUMENT** the final estimated number of confinement layers remaining.

[L] **REPLACE** the 55-gal parent drum lid and closure ring.

[M] **IF** tags were removed from the 55-gal parent drum,
THEN REPLACE tags previously removed back on the 55-gal parent drum.

[N] **($) SECURE** the STATIONARY FIRE WATCH, and **DOCUMENT** on Attachment 2. (SAC 5.7.17)

[O] **CLOSE** the 55-gal parent drum in accordance with EP-AREAG-WO-DOP-1069, and **RETURN** to the following step.

[P] **GO** to Step 5.[60].

[13] **IF** the 55-gal parent drum waste is **NOT** to be remediated within a glovebox or glovebag, **THEN:**

[A] **ENSURE** that the RP approved controls (e.g., drum hood) have been established for remediating the waste from a 55-gal parent drum.

[B] **OPEN** the drum as directed by supervision and an RCT.

5. INSTRUCTIONS—PROHIBITED ITEM DISPOSITION (continued)

[B] **GO** to Step 5.[24].

NOTE 1 *Bagging in of tools and absorbing material can be accomplished at any time that is convenient to the operation.*

NOTE 2 *The following steps to bag on a daughter drum can be performed out of sequence (e.g., to allow processing of 55-gal parent drum before bagging on a daughter drum).*

[14] **OBTAIN** and **INSPECT** a 55-gal parent drum sleeve and bungee for tears, seam integrity, rips, and degradation.

[15] **IF** the 55-gal parent drum sleeve and bungee cord has any defects,
THEN:

[A] **DISCARD** the defective bag/sleeve.

[B] **GO** to Step 5.[14].

[16] **BAG-ON** the O-ring bag/sleeve on the daughter drum to the drum port in accordance with EP-AREAG-WO-DOP-1161, and **RETURN** to the following step.

[17] **SLOWLY REMOVE** the 55-gal parent drum lid under the drum hood, being prepared to close the lid if there are unexpected conditions.

[18] **ATTACH** and **SECURE** the 55-gal parent drum bag/sleeve to the outside of the 55-gal parent drum below the first top rolling hoop of the drum with tape in front of the drum hood.

[19] **ENSURE** that a catch pan and absorbing material is available for use within the glovebag/glovebox.

[20] **MOVE** the 55-gal parent drum to the glovebag/glovebox.

NOTE *55-gal parent drums weighing greater than 600 lb require the use of a Critical Lift Plan in accordance with P101-25.*

[21] **PLACE** the 55-gal parent drum on the drum lift/tilt unit.

5. INSTRUCTIONS—PROHIBITED ITEM DISPOSITION (continued)

WARNING

1. **Loss of load any time during the lifting evolution requires the immediate STOP WORK, and NOTIFY supervision and the TA-54 Operations Center.**

2. **Pinch points are present when lifting device is attaching to drum ring/lid. Keep hands clear of all lifting device contact areas.**

NOTE 1 *RCTs perform radiological contamination surveys throughout glovebag/glovebox operations.*

NOTE 2 *Operator's hands are to be surveyed every time they are removed from the glovebag/glovebox.*

[22] **RAISE/TILT** the 55-gal parent drum as needed, and **CHOCK** the 55-gal parent drum lift/tilt wheels.

[23] **BAG-ON** the 55-gal parent drum sleeve to the glovebag/glovebox in accordance with EP-AREAG-WO-DOP-1161, and **RETURN** to the following step.

[24] **IF** VE activities are to occur for TRU waste,
THEN ENSURE that CCP-TP-113 is performed concurrently with this procedure.

[25] **EXAMINE** the contents of the 55-gal parent drum, and **DETERMINE** whether the contents of the drum have any unexpected items.

[26] **IF** any unexpected items are present in the 55-gal parent drum,
THEN:

[A] **CLOSE** the parent drum.

[B] **NOTIFY** supervision of the discrepancy, and **REQUEST** the applicable actions.

5. INSTRUCTIONS—PROHIBITED ITEM DISPOSITION (continued)

[C] **DOCUMENT** the discrepancy and applicable actions in the Comments section of Attachment 1.

[D] **($) SECURE** the STATIONARY FIRE WATCH, and **DOCUMENT** on Attachment 1. (SAC 5.7.17)

[E] **PROCEED** as directed by supervision.

WARNING

To eliminate skin lacerations, a visual inspection of the drum SHALL be performed for sharp edges, glass, and wire prior to placing hands in the drum and waste SHALL be removed in layers until the drum is emptied.

CAUTION

To minimize the potential to tear or puncture the glovebag/glovebox ports and gloves, sharp objects SHALL be properly covered before removal from the glovebag/glovebox.

NOTE *Steps 5.[27] through 5.[51] may be performed concurrently or out-of-sequence, as necessary, as the various waste items are encountered or removed from the parent drum.*

[27] **IF** actual or suspected Class 1 oxidizers, flammable metals, or pyrophoric materials/items are encountered,
OR sparking of the 55-gal parent drum contents is observed at any time during the processing of waste material,
THEN:

[A] **PLACE** a fire blanket over the suspect waste material.

[B] **STOP** waste processing.

[C] **NOTIFY** supervision of the situation.

5. INSTRUCTIONS—PROHIBITED ITEM DISPOSITION (continued)

Supervisor

[D] **NOTIFY** the following of the discrepancy, and **DOCUMENT** the notification and discrepancy in the Comments section of Attachment 1:

- TA-54 Operations Center/Shift Operations Manager
- Applicable Operations Manager or designee
- Industrial Hygienist
- Cognizant System Engineer
- WMC

NOTE *Hazardous waste containers with liquids (any amount or configuration) that have <u>not</u> been solidified (absorbed) must be managed on secondary containment pallets.*

Waste Handling Operator

[E] **IF** the suspect item is to be bagged out of the glovebag/glovebox,
THEN:

[a] **BAG OUT** the suspect item in accordance with EP-AREAG-WO-DOP-1161, and **RETURN** to the following step.

NOTE *The RCRA Hazardous Waste Code for the waste container may need to be changed based on the material identified and a WMC is to be notified for assistance with the waste characterization.*

[b] **OBTAIN** an empty daughter drum, and **PLACE** the suspect item in the empty daughter drum.

[F] **IF** the suspect item was placed into an empty daughter drum attached to the glovebag/glovebox,
THEN BAG OFF the daughter drum in accordance with EP-AREAG-WO-DOP-1161, and **RETURN** to the following step.

[G] **CLOSE** the daughter drum in accordance with EP-AREAG-WO-DOP-1069, and **RETURN** to the following step.

[H] **NOTIFY** supervision of the discrepancy.

5. INSTRUCTIONS—PROHIBITED ITEM DISPOSITION (continued)

NOTE 1 *The WMC can assist with assigning the appropriate RCRA Hazardous Waste Codes to the daughter drum.*

NOTE 2 *The following step may be performed when operationally convenient but must be completed the same day as the creation of the daughter drum.*

Waste Handling Operator

[I] **ENSURE** that the daughter drum is labeled in accordance with EP-DIV-DOP-20043 and that the appropriate RCRA Hazardous Waste Codes is assigned to the daughter drum.

NOT *Steps 5.[28] and 5.[29] are performed concurrently.*

Waste Handling Operator

[28] **REMOVE** the prohibited items from the 55-gal parent drum using appropriate methods to prevent personal injury and tears or punctures to equipment (e.g., glovebag/glovebox).

[29] **REQUEST** an RCT perform an on-contact dose rate survey of each package of waste being removed.

[30] **RECORD** the maximum dose rate found in the 55-gal parent drum on Attachment 1, and **CHECK** (√) ≤ 190 mrem/hr or > 190 mrem/hr on Attachment 1.

5. INSTRUCTIONS—PROHIBITED ITEM DISPOSITION (continued)

CS

NOTE 1 ***(*)*** *Only the contents of a single parent drum may be placed into a daughter drum in order to ensure compliance with criticality safety requirements. (NCS-CSLA-14-001)*

NOTE 2 *Waste containers with Nitrate Salt and a radiation dose rate of greater than 190 mrem/hr are to be combined with an organic absorbent before being placed into a POC. An attempt to reduce the radiation dose rate to less than or equal to 190 mrem/hr by adding organic absorbent to the Nitrate Salt should be attempted before placing the waste package into a POC.*

[31] **IF** a waste package within the 55-gal parent drums has an on-contact dose rate reading (sum of gamma and neutron) of greater than 190 mrem/hr,
AND the waste package fits inside of a POC,
AND as directed by supervision,
THEN:

[A] **RECORD** the total PE-Ci MAR and FGE value on Attachment 4, TA-54 Area G POC Waste Logsheet, as found on Attachment 1 of EP-AREAG-FO-AP-1072.

[B] **OBTAIN** a pre-assembled POC, if required, in accordance with EP-AREAG-WO-DOP-1015, TA-54 Area G Pipe Overpack Container Operations.

[C] **PLACE** the POC near the vicinity of the work activity (e.g., glovebag/glovebox), if required.

[D] **IF** the waste package is inside of a glovebox or glovebag,
THEN BAG-OUT the waste package in accordance with EP-AREAG-WO-DOP-1161, and **RETURN** to the following step.

[E] **PLACE** the waste package in the POC.

[F] **RECORD** the 55-gal parent drum number, POC waste description, and on-contact dose rate being placed in the POC on Attachment 4.

[G] **REPEAT** Steps 5.[31][B] through 5.[31][F] until all waste packages with an on-contact dose rate reading (sum of gamma and neutron) of greater than 190 mrem/hr have been remediated within the 55-gal parent drum, as required.

5. INSTRUCTIONS—PROHIBITED ITEM DISPOSITION (continued)

[H] **WHEN** all high dose rate items have been removed from the 55-gal parent drum, **THEN RECORD** initials and Z number on Attachment 1.

[I] **PRINT**, **SIGN, Z number** and **DATE** on Attachment 4.

[J] **CLOSE** the POC container in accordance with EP-AREAG-WO-DOP-1015, and **RETURN** to the following step.

[32] **IF** a waste package within the drum has an on-contact dose rate reading (sum of gamma and neutron) of greater than 190 mrem/hr,
AND the waste package does **NOT** fit inside of a POC,
THEN:

[A] **STOP** work.

[B] **NOTIFY** supervision and the LTP-DDP Operations Manager or designee of the discrepancy and **REQUEST** the applicable actions.

[33] **IF** Nitrate Salt is present in the waste container,
THEN ADD an organic absorbent (Kitty Litter/Zeolite®) to the Nitrate Salt waste material at a minimum ratio of 1.5-parts absorbent to 1-part liquid.

5. INSTRUCTIONS—PROHIBITED ITEM DISPOSITION (continued)

WARNING

Glass sample vials may contain residual granular materials which can generate sparks when subjected to mechanical agitation. To reduce the possibility of breaking a glass sample vial and the generation of sparks, glass sample vials SHALL be handled with care and void volume reduction activities SHALL be performed without excessive force. (EP-DIV-REPORT-09)

NOTE 1 *Do not crush any containers. Deformation of containers or container lids is allowable to aid in lid removal, as necessary, and help verify during RTR examination the container is not sealed.*

NOTE 2 *Package types within the drum that have the qualities presented in the following step pose no potential for hydrogen build-up.*

NOTE 3 *If YES is checked (√) in the following step for any container then that container is not to be remediated because it is a SAC 5.7.12 non-compliant container.*

[34] **($) DETERMINE** whether there are any SAC 5.7.12 non-compliant containers present (i.e., TRU waste containers in the 55-gal parent drum that do not have the following attributes), and **CHECK** (√) YES or NO on Attachment 1: (SAC 5.7.12)

- Plastic container with any type of lid
- Any container with a plastic lid
- Container without a gasket (e.g., containers with slip lids, paint cans, and other similar containers of any volume)
- Container with a slip-on lid (with or without a gasket)
- Container that does not contain TRU waste
- Fiber board containers of any volume

5. INSTRUCTIONS—PROHIBITED ITEM DISPOSITION (continued)

WARNING

To protect workers from significant injury due to possible deflagration as a result of a flammable gas concentration in sealed TRU waste containers, opening of sealed waste containers SHALL <u>not</u> be allowed.

NOTE 1 Reference *Appendix 1, List of Prohibited Items, for a detailed list of prohibited items as provided by CCP.*

NOTE 2 *Package types within the drum that have the qualities presented in the following step are considered sealed and are referred to as "SAC 5.7.12 <u>non-compliant</u> containers" within this procedure.*

NOTE 3 *Sealed containers discovered during the processing of waste may be set aside for placement in a daughter drum after the waste processing (removal of prohibited items) is complete. When a second daughter drum is created to accommodate all of the waste from the parent drum the sealed container may be placed in one daughter drum for further processing and the other daughter drum may be closed and processed as a compliant daughter drum.*

[35] **IF** any containers discovered in the drum are metal or glass with a positive mechanical locking mechanism, such as a metal screw-on lid, or a metal locking, bolted, or snap-on lid,
THEN:

[A] **NOTIFY** supervision of presence of SAC 5.7.12 <u>non-compliant</u> containers.

5. INSTRUCTIONS—PROHIBITED ITEM DISPOSITION (continued)

NOTE 1 *Vented Collection Containers for gathering SAC 5.7.12 non-compliant containers may be any container which satisfies the requirements as a vented Type 7A container (e.g., 55-gal drum or SWB).*

NOTE 2 *Multiple SAC 5.7.12 non-compliant containers from a single drum may be placed inside of the same vented Collection Container.*

NOTE 3 *SAC 5.7.12 non-compliant containers should not be commingled with other types of TRU waste.*

[B] **IF** the waste package is inside of a glovebox or glovebag, **THEN BAG-OUT** the waste package in accordance with EP-AREAG-WO-DOP-1161.

[C] **PLACE** the SAC 5.7.12 non-compliant containers inside of a vented Collection Container (e.g., vented Type 7A drum) that is dedicated for containers.

[D] **PLACE** the lid on the vented Collection Container (e.g., vented Type 7A drum).

[E] **CONTINUE** processing the 55-gal parent drum waste in accordance with the instructions in this section of this procedure.

NOTE *Containers that are compliant with SAC 5.7.12 with a volume of less than or equal to three liters may be overpacked in an outer container without demonstrating that the container is not sealed. (P930-1, LANL Waste Acceptance Criteria, Section 2.1.3)*

[36] **PLACE** any containers that are compliant with SAC 5.7.12 and have a volume of greater than 3 liters within a certified glovebag OR within an RP SME-approved containment and **REMOVE** tape, lid, cap, stopper or other appropriate method in order to demonstrate through the nondestructive examination (NDE) process that the container is not sealed.

[37] **DETERMINE** whether there are any containerized liquids, and **CHECK** (√) the applicable box on Attachment 1.

5. INSTRUCTIONS—PROHIBITED ITEM DISPOSITION (continued)

WARNING

CS **(*) Unexpected container contents may represent a criticality safety concern. If unexpected container contents are discovered that potentially affect criticality safety (i.e., radioactive liquid or fissionable material) the CSO and NCSD are to be notified to evaluate the condition.**

CS [38] **(*) IF** a containerized volume of radioactive liquid is discovered that is greater than approximately 5 liters (~1.3 gal),
THEN:

[A] **STOP** the remediation activities and **DOCUMENT** the discrepancy in the Comments section of Attachment 1.

[B] **NOTIFY** the LTP-DDP OM TA-54 Operations Center for the applicable actions.

CS **NOTE 1** ***(*)*** *Only the contents of a single drum may be placed into a daughter waste container in order to ensure compliance with the criticality safety requirements and MAR inventory requirements. (NCS-CSLA-14-001)*

NOTE 2 *Hazardous waste containers with liquids of any amount or configuration that have been solidified (absorbed) are not required to be managed on secondary containment pallets nor are they required to have a FREE LIQUIDS label affixed to the container.*

[39] **IF** SAC 5.7.12 compliant containers of any volume with liquid are discovered,
OR non-transparent SAC 5.7.12 compliant containers are discovered,
THEN:

[A] **OPEN** the container, and **DETERMINE** whether liquid is in the container, as necessary.

[B] **IF** there is no liquid in the container,
THEN:

[a] **PLACE** the container into the daughter drum.

5. INSTRUCTIONS—PROHIBITED ITEM DISPOSITION (continued)

[b] **CONTINUE** to process the waste in accordance with this procedure.

[C] **DOCUMENT** the approximate volume on Attachment 1.

[D] **PERFORM** a pH test to determine the following, and **DOCUMENT** the pH value on Attachment 1:

- Acid (less than 7)
- Caustic (base) greater than 7

[E] **NEUTRALIZE** the liquid, as necessary.

[F] **IF** Nitrate Salt is present in the waste container,
THEN ADD an organic absorbent (Kitty Litter/Zeolite®) to the liquid at a minimum ratio of 1.5-parts absorbent to 1-part liquid and **GO** to Step 5.[39][J].

CAUTION

To eliminate hazards to the glovebag/glovebox (i.e., table and gloves), use the appropriate absorbing agents and compatible container to absorb the liquids.

[G] **OBTAIN** the appropriate absorbing agent and a compatible container.

[H] **PLACE** the absorbing material in a compatible container.

[I] **TRANSFER** the liquid into the compatible container, as required.

CS **NOTE** ***(*)*** *Only the contents of a single parent drum may be placed into a daughter drum in order to ensure compliance with criticality safety requirements and MAR inventory requirements. (NCS-CSLA-14-001)*

[J] **PLACE** the absorbed liquid in the daughter drum.

[K] **DOCUMENT** the disposition in the Comments section of Attachment 1.

[40] **DETERMINE** whether there is any free liquid in the 55-gal parent drum, and **CHECK** (√) YES or NO on Attachment 1.

5. INSTRUCTIONS—PROHIBITED ITEM DISPOSITION (continued)

WARNING

Use appropriate PPE before handling acidic or caustic (base) liquids.

Waste Handling Operator

[41] **IF** free liquid is found in the 55-gal parent drum,
THEN:

[A] **DOCUMENT** the approximate volume on Attachment 1.

[B] **PERFORM** a pH test to determine the following, and **DOCUMENT** the pH value on Attachment 1:
- Acid (less than 7)
- Caustic (base) greater than 7

[C] **NEUTRALIZE** the liquid, as necessary.

CAUTION

To eliminate hazards to the glovebag/glovebox (i.e., table and gloves), use the appropriate absorbing agents and compatible container to absorb the liquids.

[D] **OBTAIN** the appropriate absorbing agent and a compatible container.

[E] **PLACE** the absorbing material in a compatible container.

[F] **TRANSFER** the liquid into the compatible container, as required.

CS **NOTE** ***(*)*** *Only the contents of a single parent drum may be placed into a daughter drum in order to ensure compliance with criticality safety requirements. (NCS-CSLA-14-001)*

[G] **PLACE** the absorbed liquid in a waste container (e.g., 55-gal drum or SWB).

5. INSTRUCTIONS—PROHIBITED ITEM DISPOSITION (continued)

[H] **DOCUMENT** the disposition in the Comments section of Attachment 1.

CAUTION

To minimize the potential to tear or puncture the glovebag/glovebox, pipes and equipment SHALL be properly covered before removal from a glovebag/glovebox.

NOTE Reference *Appendix 1 for a detailed list of prohibited items as provided by CCP.*

[42] **IF** the drum contains a prohibited item that has evidence that the prohibited item has been previously punctured,
THEN:

[A] **ENSURE** that any liquid within the prohibited item is absorbed.

[B] **DISPOSITION** the prohibited items by placing indicators approved by supervision into the holes with the assistance of an RCT, as necessary, and **SECURE** with tape, and **DOCUMENT** the disposition in the Comments section on Attachment 1.

[C] **PLACE** the item in a daughter drum.

[43] **IF** the drum contains a pressurized item that is **NOT** punctured or breached,
THEN:

NOTE 1 *Pressurized cylinders and aerosol cans **SHALL** be placed in separate Pressurized Collection Containers (e.g., one collection container for cylinders and a separate collection container for aerosol cans).*

CS

NOTE 2 ***(*)*** *Potentially pressurized containers from multiple 55-gal parent drums may be placed into a single Pressurized Item Collection Container. The daughter drum must be labeled with D001 and D003 and all parent container RCRA hazardous waste codes. The daughter drum Accumulation Start Date must be re labeled with the earliest parent container Accumulation Start Date. (NCS-CSLA-14-001)*

[A] **OBTAIN** the Pressurized Item Collection Container as required, and **PLACE** the Pressurized Item Collection Container as directed by supervision.

5. INSTRUCTIONS—PROHIBITED ITEM DISPOSITION (continued)

[B] **RECORD** the total batch PE-Ci MAR and FGE value (as found on Attachment 1 of EP-AREAG-FO-AP-1072) and date created on Attachment 3, TA-54 Area G Drum Prohibited Item Collection Container Data Sheet.

NOTE *Some parent drums may not have an accumulation start date. In these cases the accumulation start date can be obtained from the WMC.*

[C] **RECORD** or **CHECK** (√) the following on Attachment 3:

- Pressurized Container/Aerosol Cans/Other [check (√) one]
- Date Item Added
- Parent Drum Number
- Parent Accumulation Start Date or Received Date (non-hazardous waste container)
- Parent RCRA Hazardous Waste Code, if applicable
- Item Description (use trade name e.g., WD-40, paint, as applicable)
- Item Shape
- Item Size
- Item Labeling, if applicable or N/A
- Item Weight (lb)

NOTE *Removing the external radiological contamination from the pressurized item removes the MAR from the item and thus eliminates the need to track the PE-Ci value and the FGE value of the item.*

[D] **DECONTAMINATE** the pressurized item (as much as possible) by wiping down with Kimwipes or equivalent or **CONTAIN** any radiological contamination, as directed by the RCT.

[E] **IF** the pressurized item is inside of a glovebox or glovebag,
THEN BAG-OUT the pressurized item either through a glove port or drum port in accordance with EP-AREAG-WO-DOP-1161, and **RETURN** to the following step.

NOTE *Item Identification labels are generated as part of performing the WCATS desktop application.*

[F] **ENSURE** that a container Item Identification label has been obtained, and **RECORD** Item ID number on Attachment 3.

5. INSTRUCTIONS—PROHIBITED ITEM DISPOSITION (continued)

[G] **ENSURE** that a preprinted Item ID Number label has been placed on the bag.

[H] **PLACE** the pressurized item into the Pressurized Item Collection Container.

[I] **ENSURE** that the Pressurized Item Collection Container is labeled with a hazardous waste label and accumulation start date.

NOTE *The hazardous waste label may need to be replaced to ensure that all information is added and legible.*

[J] **ENSURE** that RCRA Hazardous Waste codes D001 and D003 and all RCRA Hazardous Waste codes from the associated parent containers are on the hazardous waste label for the Pressurized Collection Container, as applicable.

[K] **ENSURE** that the Prohibited Item Collection Container lid has been placed on the Prohibited Item Collection Container.

[L] **IF** the Prohibited Item Collection Container is full,
THEN:

[a] **CLOSE** the Prohibited Item Collection Container in accordance with EP-AREAG-WO-DOP-1069.

NOTE *The WMC may be notified at a time that is operationally convenient.*

Supervisor

[b] **NOTIFY** the WMC of the Prohibited Item Collection Container contents.

5. INSTRUCTIONS—PROHIBITED ITEM DISPOSITION (continued)

NOTE *Non-liquid hazardous waste items listed below may be placed into the daughter waste container for disposal at the WIPP; all WIPP WAC non-compliant items listed in the following step must be placed into a separate collection container for final disposition.*

Waste Handling Operator

[44] **IF** any of the following items are found during the processing of the waste,

- Lead-elemental (e.g., circuit boards)
- Mercury-elemental (e.g., thermometers or switches)
- Batteries (e.g., lead/acid, nickel cadmium, or lithium)
- Light bulbs (i.e., incandescent or fluorescent)
- PCB items (e.g., ballasts, capacitors, or transformers)

THEN:

[A] **RECORD** the item descriptive information (item type, size, trade name, if available) in the Comments section on Attachment 1.

CS **NOTE 1** ***(*)*** *Only the contents of a <u>single</u> parent drum may be placed into a daughter drum in order to ensure compliance with criticality safety requirements and MAR inventory requirements. (NCS-CSLA-14-001)*

NOTE 2 *The WMC may be notified at a time that is operationally convenient.*

Supervisor

[B] **NOTIFY** the WMC of items found and whether the items were removed, placed into a separate collection container, or placed into a daughter drum.

NOTE 1 *The WMC can assist with assigning the appropriate RCRA Hazardous Waste Codes to the daughter drum.*

NOTE 2 *The following step may be performed when operationally convenient but must be completed the same shift as the identification of the item.*

[C] **ENSURE** that the appropriate RCRA Hazardous Waste Codes are assigned to the drum that receives the item (e.g., daughter drum or collection drum).

5. INSTRUCTIONS—PROHIBITED ITEM DISPOSITION (continued)

NOTE *PCB Item Number labels may be attached to the daughter drum during closing.*

Waste Handling Operator

[45] **IF** a potential non-liquid PCB item/article was found,
THEN:

[A] **PLACE** a PCB Item Number label on the article to be removed or on the drum receiving the PCB waste (above the top rolling hoop and cover with clear tape).

[B] **PLACE** the PCB item into a daughter waste container or collection container, as applicable.

[C] **RECORD** the PCB Item Number on Attachment 1.

[46] **IF** additional waste remains to be remediated that has **NOT** been addressed by the previous remediation steps,
THEN:

[A] **REQUEST** the applicable actions from the LTP-DDP Operations Manager.

LTP-DDP Operations Manager or designee

[B] **DETERMINE** the applicable actions to remediate the identified waste with the assistance of personnel from Operations, Radiation Protection, and Industrial Safety and Hygiene, as necessary.

[C] **DOCUMENT** the applicable actions (e.g., Comments section of Attachment 1).

Waste Handling Operator

[47] **RECORD** the general description of waste packages found in the 55-gal parent drum on the Comments section on Attachment 1, as necessary.

NOTE *Steps 5.[48] through 5.[51] may be performed in any order and out of sequence in order to allow for the disposition of PPE as operationally necessary.*

[48] **IF** PPE came in contact with the hazardous waste,
THEN REMOVE the PPE and **PLACE** the PPE into a TRU daughter waste container (e.g., SWB or 55-gal drum), if possible.

5. INSTRUCTIONS—PROHIBITED ITEM DISPOSITION (continued)

[49] **IF** PPE that came in contact with the hazardous waste **CANNOT** be placed into a TRU daughter waste container,
THEN PACKAGE the PPE into a container in accordance with guidance from the WMC.

[50] **IF** there is PPE that came in contact with hazardous waste from a previous drum,
AND the RCRA Hazardous Waste Codes associated with the previous drum are included in the RCRA Hazardous Waste Codes of the current TRU daughter waste container,
THEN PLACE the PPE into a current TRU daughter waste container, if possible.

[51] **IF** there is PPE that came in contact with hazardous waste from the previous drum,
AND the RCRA Hazardous Waste Codes associated with the previous parent drum are **NOT** included in the RCRA Hazardous Waste Codes of the current TRU daughter waste container,
THEN ENSURE that the PPE has been packaged into a container in accordance with guidance from the WMC.

NOTE 1 *The mass (weight) of waste between the daughter drums **SHALL** be evenly distributed as much as practicable.*

CS **NOTE 2** ***(*)*** *Only the contents of a <u>single</u> parent drum may be placed into a daughter drum in order to ensure compliance with criticality safety requirements. (NCS-CSLA-14-001)*

[52] **IF** all waste will **NOT** fit into the waste container (e.g., 55-gal drum or SWB),
THEN:

[A] **OBTAIN** another waste container (e.g., 55-gal drum or SWB).

[B] **IF** the waste is inside of a glovebox or glovebag,
THEN BAG-OFF the existing daughter drum in accordance with EP-AREAG-WO-DOP-1161, and **RETURN** to the following step.

[C] **RECORD** waste container (e.g., 55-gal drum or SWB) RCRA Codes and Accumulation Start Date on Attachment 1.

[D] **CLOSE** waste container (e.g., 55-gal drum or SWB) in accordance with EP-AREAG-WO-DOP-1069, and **RETURN** to the following step.

5. INSTRUCTIONS—PROHIBITED ITEM DISPOSITION (continued)

[E] **IF** the waste is inside of a glovebox or glovebag,
THEN BAG-ON a new daughter drum in accordance with EP-AREAG-WO-DOP-1161, and **RETURN** to the following step.

[F] **RECORD** the waste container (e.g., 55-gal drum or SWB) number on Attachment 1.

[G] **CONTINUE** processing the waste in accordance with this procedure.

[53] **ENSURE** that all prohibited items have been removed from the waste container.

[54] **ABSORB** any free standing liquid resulting from the processing of the waste with Kimwipes or equivalent, and **PLACE** the Kimwipes or equivalent into the 55-gal daughter drum, as necessary.

WARNING

To reduce the potential for a fire, all waste SHALL be removed from the glovebag/glovebox when prohibited item disposition activities are completed for the day.

[55] **ENSURE** that all waste has been placed into a waste container (e.g., 55-gal drum or SWB).

Waste Handling Operator

[56] **IF** the 55-gal parent drum is attached to a glovebox or glovebag,
THEN BAG-OFF the 55-gal parent drum in accordance with EP-AREAG-WO-DOP-1161.

[57] **IF** the waste was removed from a parent drum,
THEN DISPOSITION the empty 55-gal parent drum as follows:

[A] **REMOVE** or **OBLITERATE** the original parent drum identification labels (shorty and All-In-One) and **APPLY** an empty label to the empty 55-gal parent drum.

[B] **ASSIGN** and **PRINT** a LLW identification (ID) number to the empty 55-gal parent drum using the WCATS desktop application (e.g., 412-REMED).

5. INSTRUCTIONS—PROHIBITED ITEM DISPOSITION (continued)

[C] **APPLY** the LLW ID to the empty 55-gal parent drum and **REMOVE** the 55-gal parent drum from the target area.

[D] **DOCUMENT** the requested information on Attachment 6, TA-54 Area G Empty Container Data Sheet.

NOTE *Hazardous waste containers with liquids (any amount or configuration) that have not been solidified (absorbed) must have a FREE LIQUIDS label affixed and be managed on secondary containment pallets with containment capacity equal to the capacity of the largest liquid-containing container.*

[58] **IF** the 55-gal daughter drum is attached to a glovebox or glovebag,
THEN BAG-OFF the daughter drum in accordance with EP-AREAG-WO-DOP-1161.

[59] **CLOSE** the waste container (e.g., 55-gal drum or SWB) in accordance with EP-AREAG-WO-DOP-1069.

[60] **RECORD** the waste container (e.g., 55-gal drum or SWB) number and RCRA Codes and Accumulation Start Date on Attachment 1.

Supervision

[61] **($) IF** another drum is **NOT** to be remediated,
THEN SECURE the STATIONARY FIRE WATCH, and **DOCUMENT** on Attachment 1. (SAC 5.7.17)

NOTE *The following step may be performed out of sequence.*

Waste Handling Operator

[62] **ENSURE** that the applicable WCATS desktop remediation application (e.g., 412-REMED) has been completed and the all-in-one labels generated and that the TRU daughter waste containers (e.g., SWB or 55-gal drum) have been labeled in accordance with EP-DIV-DOP-20043.

5. INSTRUCTIONS—PROHIBITED ITEM DISPOSITION (continued)

NOTE 1 *Individual closed TRU daughter waste containers and the associated absorbed liquid may be removed from the SSSR AREA as the individual TRU daughter waste containers are closed. The TRU daughter waste containers may be removed provided the WCATS remediation task that moves waste into these daughters has been completed with the remaining waste in the parent waste container represented on that task using a Bypass container.*

NOTE 2 *The following step moves the closed TRU daughter waste containers out of the SSSR process area (e.g., PermaCon) while keeping the PE-Ci value of the TRU daughter waste containers as an in-process value [LCO 3.1.1(1)] in the WCATS database.*

[63] **IF** TRU daughter waste containers are to be moved out of the SSSR process area (e.g., contamination control enclosure),
AND all of the parent waste container in the batch has **NOT** been remediated,
THEN MOVE the closed TRU daughter waste containers and the associated absorbed liquid out of the SSSR process area (e.g., contamination control enclosure) into the SSSR AREA (Grid X of IN-PROCESS).

[64] **WHEN** the processing is complete,
THEN:

CS [A] **(*) VERIFY** that there are no parent or daughter waste containers within the SSSR process area (e.g., contamination control enclosure). (NCS-CSLA-14-001)

CS [B] **(*) ENSURE** that all TRU waste [e.g., the TRU daughter waste containers and absorbed liquid] are moved out of the SSSR process area (e.g., contamination control enclosure). (NCS-CSLA-14-001)

[65] **RECORD** the date and approximate time that the remediation was completed on Attachment 1 or 2, as applicable.

CS **NOTE** ***(*)*** *Debris contained in the vacuum systems for contamination control from multiple parent drums may be placed into a single daughter container (e.g., LB99 or B-25). (NCS-CSLA-14-001)*

[66] **IF** the prohibited item collection containers are to be reused,
THEN STAGE the prohibited item collection containers, as necessary.

5. INSTRUCTIONS—PROHIBITED ITEM DISPOSITION (continued)

[67] **IF** the prohibited item collection containers are FULL or **NOT** to be reused, **THEN:**

[A] **TRANSFER** the full prohibited item collection containers to a designated location outside of the SSSR process area (e.g., contamination control enclosure) into the SSSR AREA (Grid X of IN-PROCESS), as necessary.

NOTE *The following step may be performed out of sequence.*

[B] **ENSURE** that the prohibited item collection containers, as applicable, have been weighed and that the following information is documented on Attachment 1:

- Waste container unique identifiers
- **CHECK** (√) the type of waste container or **RECORD** the daughter waste container type.
- Weights
- Scale information
- LLW Daughter container information
- LLW Daughter container content description
- Performer name, signature, Z number and date
- Attachment 1 page numbering
- Closure date

6. INSTRUCTIONS—SECURING ENCLOSURE WITH IN-PROCESS WASTE CONTAINER

This section is a stand-alone section and may be performed independently of, or in conjunction with other Instruction sections of this procedure.

This section must be performed any time that an in-process waste drum is to be left unattended inside of the contamination control enclosure for an extended period of time such as at the end of a shift when the in-process waste container is to be left unattended overnight.

NOTE *Radiological surveys may be performed as determined necessary [e.g., by an RP representative (e.g., RCT)] any time during the performance of this procedure.*

Waste Handling Technician

[1] **RECORD** the following information on Attachment 5, TA-54 Area G TRU Drum SSSR Activity Secure Enclosure Data Sheet:

- Date
- Parent drum number
- Daughter drum number

[2] **ENSURE** that <u>one</u> or more (e.g. [A], [B], [C], or [A] and [B]) of the following has been performed, and **DOCUMENT** on Attachment 5:

[A] **($) ENSURE** that all exposed waste material removed from the waste container has been placed into a daughter or the parent waste drum. (SAC 5.7.17)

[B] **($) ENSURE** that all exposed waste material removed from the waste container has been covered by a fire blanket or other fire retardant material. (SAC 5.7.17)

[C] **($) ENSURE** that a STATIONARY FIRE WATCH has been established inside of the SSSR process area (e.g., contamination control enclosure). (SAC 5.7.17)

[3] **ENSURE** that open waste drums have been closed (may be a temporary configuration for a waste container to be reopened).

[4] **ENSURE** that all equipment used to remediate the waste container have been placed in a safe condition (e.g., electrical equipment de-energized and unplugged), as applicable.

6. INSTRUCTIONS—SECURING ENCLOSURE WITH IN-PROCESS WASTE CONTAINER (continued)

[5] **VERIFY** that the following applicable air movers are ON and that the applicable HEPA filter DP reading for each air mover is within the required range, and **DOCUMENT** the results on Attachment 5:

Facility	Air Mover	Required HEPA DP (in. wc)
Dome TA-54-231 PermaCon	AM-01	≥ 0.5 to ≤ 2.5
	AM-02	
	AM-03	
	AM-08	
Building TA-54-412 Enclosure	AM-01	≥ 0.5 to ≤ 3.5
	AM-02	
	AM-03	
Dome TA-54-375 PermaCon	PDI-003	≥ 1.0 to ≤ 2.5
	PDI-004	

[6] **($) VERIFY** that all combustible/flammable liquids are removed from the SSSR AREA or attended, and **DOCUMENT** on Attachment 5. (LCO 3.3.1)

7. POST-PERFORMANCE ACTIVITIES

7.1 Disposition

Waste Handling Operator

[1] **ENSURE** that name, signature, Z number, and date are completed on the applicable attachments.

Supervisor or designee

[2] **REVIEW** the applicable attachments for accuracy and completeness.

[3] **IF** any discrepancies are identified,
THEN working with the originator correct the documentation.

[4] **IF** any deficiencies were identified,
THEN INITIATE actions to correct the deficiency [e.g., Facility Service Request (FSR) System], and **DOCUMENT** the actions taken (e.g., FSR Issue Number) in the Comments section of the applicable appendices.

[5] **ENSURE** that all flammable liquids have been removed from the SSSR AREA in accordance with EP-AREAG-FO-AP-1097.

[6] **ENSURE** that name, signature, Z number, and date are completed on the applicable attachments.

SOS or SOM

[7] **IF** Section 5 was performed,
THEN:

[A] **REVIEW** the applicable attachments for accuracy and completeness.

[B] **CHECK** (√) YES or NO on Attachment 1 to indicate whether the applicable acceptance criteria are satisfied.

7.1 Disposition (continued)

[C] **SIGN** and **DATE/TIME** Attachment 1.

[D] **ENSURE** that the TA-54 Area G Compliance Requirements Tracking Schedule and status boards, as applicable, are updated in accordance with EP-DIV-AP-20193, EWMO Compliance Requirements Tracking.

NOTE 1 *Support-Services Subcontractors are not required to perform a Post-Job Review.*

NOTE 2 *Completing a Post-Job Review may be accomplished using the applicable P300 form or online (the preferred method since the institution has access to feedback and lessons learned* http://int.lanl.gov/safety/iwmc/ *[Click on the Submit IWD Part 4 Post-Job Review]).*

Supervisor or designee

[8] **IF** this procedure is categorized as a moderate or high/complex activity and any of the following occur:

- An activity was completed for the first time
- A request was made by anyone involved with the performance of this procedure to perform a post-job review
- An abnormal event occurred
- A revision to an existing procedure was issued and it has been determined by the procedure owner or designee that a Post-Job Review is required

THEN PERFORM a Post-Job Review in accordance with P300.

[9] **IF** the Post-Job Review identified any necessary changes to this procedure,
THEN INITIATE a revision to this procedure.

7.2 Records Processing

Supervisor or designee

[1] **ENSURE** that documents generated by the performance of this procedure are processed as follows:

Record Identification	Record Type Determination	Protection/Storage Methods	Processing Instructions
Attachment 1, TA-54 Area G Prohibited Item Disposition Worksheet Attachment 2, TA-54 Area G Drum Confinement Layer Worksheet Attachment 3, TA-54 Area G Drum Prohibited Item Collection Container Data Sheet Attachment 4, TA-54 Area G POC Waste Logsheet Attachment 5, TA-54 Area G TRU Drum SSSR Activity Secure Enclosure Data Sheet Attachment 5, TA-54 Area G Empty Container Data Sheet	QA Record	Supervision **SHALL** implement a reasonable level of protection to prevent loss and degradation. Records should be maintained in a one-hour fire rated metal file cabinet when not in use.	When the records are ready for final disposition, the record is transferred to Records Management in accordance with EP-DIR-AP-10003, Records Management Procedure for ADEP Employees.

8. REFERENCES

ABD-WFM-002, Technical Safety Requirements (TSRs) for Technical Area 54, Area G

CCP-TP-113, CCP Standard Contact-Handled Waste Visual Examination

DOE/WIPP 11-3384, CBFO Approved Filter Vents

EP-AREAG-FO-AP-1072, TA-54 Area G SSSR AREA TRU MAR Inventory Control

EP-AREAG-FO-AP-1097, TA-54 Area G Combustible/Flammable Liquid Control

EP-AREAG-FO-DOP-1087, TA-54 Work Release Round Sheets

EP-AREAG-WO-DOP-0220, TA-54 Area G Building 412 Containment Tent Operator Round Sheet

EP-AREAG-WO-DOP-1015, TA-54 Area G Pipe Overpack Container Operations

8. REFERENCES (continued)

EP-AREAG-WO-DOP-1061, TA-54 Area G Dome 375 PermaCon Operator Round Sheet

EP-AREAG-WO-DOP-1161, TA-54 Area G TRU Waste Glovebag Operations

EP-AREAG-WO-DOP-1162, TA-54 Area G Dome 231 PermaCon Operator Round Sheet

EP-AREAG-WO-DOP-1069, TA-54 Area G TRU SWB/Drum Operations

EP-AREAG-WO-DOP-1070, TA-54 Area G Unvented TRU Waste Container Handling and Storage

EP-AREAG-WO-DOP-1091, TA-54 Area G TRU Oversized Container SSSR Activities

EP-DIR-AP-10003, Records Management Procedure for ADEP Employees

EP-DIV-AP-0112, EWMO Pre-Job Briefings

EP-DIV-AP-20047, LTP Glovebox/Glovebag and Glove Safety Program

EP-DIV-AP-20059, EWMO Watchbill Administration

EP-DIV-AP-20098, LTP TRU Waste Remediation Safety Evaluation

EP-DIV-AP-20193, EWMO Compliance Requirements Tracking

EP-DIV-DOP-20206, LTP New Type 7A Waste Container Receipt, Control, and Distribution

EP-DIV-DOP-20043, LTP TRU Waste Container Labeling

EP-DIV-POLICY-20057, EWMO Health and Safety Policy – Manual Movement

EP-DIV-REPORT-09, Engineering Path Forward Report for CMR Wing 2 Containers

EP2011-5332, Compliance with LANL Hazardous Waste Facility Permit Processing/Packaging in the 412 or Future 375 Boxline Processing Facilities

NCS-CSLA-14-001, Drum Remediation and Repackaging

8. REFERENCES (continued)

P101-18, Procedure for Pause/Stop Work

P101-25, Cranes, Hoists, Lifting Devices, and Rigging Equipment

P101-26, Welding, Cutting, and Other Spark or Flame Producing Operations

P300, Integrated Work Management

P330-6, Nonconformance Reporting

P930-1, LANL Waste Acceptance Criteria

RP-1-DP-65, Radiological Containments

APPENDIX 1
Page 1 of 1

LIST OF PROHIBITED ITEMS

LIST OF PROHIBITED ITEMS
Liquid Wastes (Waste **SHALL** contain as little residual liquid as is reasonably achievable by pouring, pumping, and/or aspirating, and internal containers **SHALL** contain less than 1 inch or 2.5 centimeters (cm) of liquid in the bottom of the container. Total residual liquid in any payload container (e.g., 55-gal drum or Standard Waste Box) may not exceed 1 percent volume of that container.)
No detectable liquid in payload containers with a U134 Hazardous Waste Number (HWN)
Non-Radionuclide Pyrophorics
Non-mixed hazardous waste
Incompatible wastes (Wastes that are incompatible with backfill, seal and panel closure materials, container and packaging materials, shipping container materials, and/or other wastes.)
Explosives
Compressed Gases/Pressurized containers (e.g., aerosol cans)
Polychlorinated Biphenyl (PCB) Liquids
Ignitables
Corrosives
Reactive waste
Sealed containers
Heat-sealed bags (unvented) greater than 4 liters with a surface area <390 square inches
Sharp or heavy objects not adequately blocked, braced, or packaged

APPENDIX 2
Page 1 of 1

TRU WASTE CONTAINER INNER PACKAGE CONFINEMENT LAYER WORKSHEET

NOTE 1 *The tracking of the layers of confinement are to ensure that no waste item with greater than six layers of confinement are placed inside of a daughter waste container and to document the highest layer of confinement on Attachment 1 and the tracking of each item's layer of confinement is not required.*

NOTE 2 *If an item is checked as having 6 layers of confinement there is no reason to continue tracking the layers of confinement as no item may have over six layers of confinement.*

NOTE 3 *This worksheet is not a record.*

Daughter Waste Container No.: _____

Waste Item 1:	☐ 0	☐ 1	☐ 2	☐ 3	☐ 4	☐ 5	☐ 6
Waste Item 2:	☐ 0	☐ 1	☐ 2	☐ 3	☐ 4	☐ 5	☐ 6
Waste Item 3:	☐ 0	☐ 1	☐ 2	☐ 3	☐ 4	☐ 5	☐ 6
Waste Item 4:	☐ 0	☐ 1	☐ 2	☐ 3	☐ 4	☐ 5	☐ 6
Waste Item 5:	☐ 0	☐ 1	☐ 2	☐ 3	☐ 4	☐ 5	☐ 6
Waste Item 6:	☐ 0	☐ 1	☐ 2	☐ 3	☐ 4	☐ 5	☐ 6
Waste Item 7:	☐ 0	☐ 1	☐ 2	☐ 3	☐ 4	☐ 5	☐ 6
Waste Item 8:	☐ 0	☐ 1	☐ 2	☐ 3	☐ 4	☐ 5	☐ 6
Waste Item 9:	☐ 0	☐ 1	☐ 2	☐ 3	☐ 4	☐ 5	☐ 6
Waste Item 10:	☐ 0	☐ 1	☐ 2	☐ 3	☐ 4	☐ 5	☐ 6
Waste Item 11:	☐ 0	☐ 1	☐ 2	☐ 3	☐ 4	☐ 5	☐ 6
Waste Item 12:	☐ 0	☐ 1	☐ 2	☐ 3	☐ 4	☐ 5	☐ 6

ATTACHMENT 1
Page 1 of 4

Page _____ of _____

TA-54 AREA G DRUM PROHIBITED ITEM DISPOSITION WORKSHEET

5.[6] 55-gal Parent Drum Number: _____
Remediation start date: _____

4.3[7][A] **($)** Total volume of flammable liquids within the SSSR AREA boundaries for operation and maintenance activities is ≤ 7 gal: [LCO 3.3.1(1a)] ☐ SAT ☐ UNSAT

5.[2] **($)** STATIONARY FIRE WATCH established. (SAC 5.7.17) _____/_____
Initials/Z# Date

5.[7] 55-gal Parent Drum RCRA Codes: _____
_____
Accumulation Start Date: _____

5.[10][F][c]/ 5.[26][D] **($)** STATIONARY FIRE WATCH secured. (SAC 5.7.17) ☐ N/A
_____/_____
Initials/Z# Date

5.[30] Maximum waste dose rate: _____ mrem/hr
☐ ≤ 190 mrem/hr ☐ > 190 mrem/hr ☐ N/A

5.[31][H] High dose rate items removed: _____/_____ ☐ N/A
Initials Z No.

5.[34] **($)** SAC 5.7.12 non-compliant containers are present: ☐ YES ☐ NO ☐ N/A

ATTACHMENT 1

Page 2 of 4

Page _____ of _____

5.[6] 55-gal Parent Drum Number: _____

5.[37] Containerized liquids present: ☐ YES ☐ NO ☐ N/A

5.[39][C]/[D] Containerized liquid: ☐ N/A

Liquid Volume/Unit				
Liquid pH				

5.[40] Free liquid present in 55-gal parent drum: ☐ YES ☐ NO ☐ N/A

5.[41][A] 55-gal parent drum free liquid volume: _____ ☐ N/A

5.[41][B] 55-gal parent drum free liquid pH: _____ ☐ N/A

5.[45][C] PCB item numbers: _____ ☐ N/A

5.[52][C]/[F]
5.[60] Waste container information: ☐ N/A

Number				
RCRA Codes				
Accumulation Start Date				

5.[61] **($)** STATIONARY FIRE WATCH secured. _____/_____
Initials/Z# Date

5.[65] Date and approximate time drum remediation completed: _____/_____
Date Time

ATTACHMENT 1
Page 3 of 4

Page _____ of _____

NOTE *Multiple copies of this Attachment 1 page are used to separately document each TRU Daughter Waste Container generated from the identified parent waste container.*

5.[6] 55-gal Parent Drum Number: _____

5.[67][B] TRU Daughter Waste Container
Serial No.: _____
WCATS Labeled ID: _____
Container Type: ☐ 55-gal ☐ SWB
☐ Other _____

Calibrated Scale: Cal. File No.: _____
Manufacturer: _____
Model: _____
Last Cal Date: _____
Last Cal Date within 1 yr: ☐ YES ☐ NO

Total Confinement Layers (< 6): _____

Closure Date: _____

TRU Daughter Gross Weight: _____ lb

TRU Daughter Tare Weight: _____ lb

TRU Daughter Net Weight: _____ lb

TRU Daughter information: _____
_____
_____
_____

TRU Daughter contents/item description: _____
_____
_____
_____

Performed By: _____ / _____ / _____ / _____
Operator (Print) Signature Z # Date

ATTACHMENT 1
Page 4 of 4

Page _____ of _____

5.[6] 55-gal Parent Drum Number: _____

Comments: _____

7.1[1] Performed By: _____ / _____ / _____ / _____
Operator (Print) Signature Z # Date

7.1[6] Reviewed By: _____ / _____ / _____ / _____
Supervisor/Designee (Print) Signature Z # Date

7.1[7][B] Acceptance criteria satisfied: ☐ YES ☐ NO

7.1[7][C] Reviewed By: _____ / _____ / _____ / _____
SOM or designee (print) Signature Z # Date/Time

ATTACHMENT 2
Page 1 of 1

Page _____ of _____

TA-54 AREA G DRUM CONFINEMENT LAYER WORKSHEET

5.[6] 55-gal Parent Drum Number: _____
Remediation start date: _____

4.3[7][A] **($)** Total volume of flammable liquids within the SSSR AREA boundaries for operation and maintenance activities is ≤ 7 gal: [LCO 3.3.1(1a)] ☐ SAT ☐ UNSAT

5.[2] **($)** STATIONARY FIRE WATCH established. (SAC 5.7.17) _____/_____
Initials/Z# Date

5.[7] 55-gal Parent Drum RCRA Codes: _____
_____
Accumulation Start Date: _____

5.[12][E][c] **($)** STATIONARY FIRE WATCH secured. (SAC 5.7.17) _____/_____
Initials/Z# Date

5.[12][J] Initial Estimated Total Confinement Layers: _____

5.[12][K] Final Estimated Total Confinement Layers (< 6): _____

5.[12][N] **($)** STATIONARY FIRE WATCH secured. (SAC 5.7.17) _____/_____
Initials/Z# Date

5.[64] Date and approximate time drum remediation completed: _____/_____
Date Time

Comments: _____
_____
_____

7.1[1] Performed By: _____/_____/_____/_____
Operator (Print) Signature Z # Date

7.1[6] Reviewed By: _____/_____/_____/_____
Supervisor/Designee (Print) Signature Z # Date

ATTACHMENT 3
Page 1 of 1

TA-54 AREA G DRUM PROHIBITED ITEM COLLECTION CONTAINER DATA SHEET

5.[43][C] ☐ Pressurized Container ☐ Aerosol Cans ☐ Other					5.[43][B] Total Batch PE-Ci MAR Value:_____ Total FGE Value:_____		5.[43][B] Date Created:	Page: _____ of _____	
5.[43][C] Date Item Added	5.[43][F] Item ID No.	5.[43][C] Parent Drum No.	5.[43][C] Parent Accumulation Start Date	5.[43][C] Parent RCRA Code	5.[43][C] Item Description	5.[43][C] Item Shape	5.[43][C] Item Size	5.[43][C] Item Labeling	5.[43][C] Item Weight (lb)

Comments: _____

_____

_____

7.1[1] Performed By: _____ / _____ / _____ / _____
Operator (Print) Signature Z # Date

7.1[6] Reviewed By: _____ / _____ / _____ / _____
Supervisor/Designee (Print) Signature Z # Date

ATTACHMENT 4
Page 1 of 1

TA-54 AREA G POC WASTE LOGSHEET

5.[31][A] Total PE-Ci MAR: _____ PE-Ci
FGE: _____ g

Step 5.[31][F] Parent Drum Number	Step 5.[31][F] POC Waste Description	Step 5.[31][F] On-Contact Dose Rate

Comments: _____

5.[31][I]/ 7.1[1] Performed By: _____ / _____ / _____ / _____
Operator (Print) Signature Z # Date

7.1[6] Reviewed By: _____ / _____ / _____ / _____
Supervisor/Designee (Print) Signature Z # Date

ATTACHMENT 5
Page 1 of 1

TA-54 AREA G TRU DRUM SSSR ACTIVITY SECURED ENCLOSURE DATA SHEET

6.[1] Date: _____
Parent Drum No.: _____
Daughter Drum No.: _____

6.[2] **($)** One or more of the following conditions exists: (SAC 5.7.17) ☐ N/A

- Exposed waste material placed in a daughter or the parent waste drum and drum closed.
- Exposed waste material covered by a fire blanket or other fire retardant material.
- STATIONARY FIRE WATCH established inside of the SSSR process area.

Initials / Z# / Date	Initials / Z# / Date	Initials / Z# / Date
Initials / Z# / Date	Initials / Z# / Date	Initials / Z# / Date

Date/Time (6.[5])	Facility (6.[5])	Air Mover	Required HEPA DP (in. wc)	Air Mover Status (6.[5])	Required HEPA DP (in. wc) (6.[5])
	☐ Dome TA-54-231 PermaCon	AM-01/ AM-02/ AM-03/ AM-08	≥ 0.5 to ≤ 2.5	☐ ON ☐ OFF ☐ N/A	☐ SAT ☐ UNSAT ☐ N/A
				☐ ON ☐ OFF ☐ N/A	☐ SAT ☐ UNSAT ☐ N/A
	☐ Building TA-54-412 Enclosure	AM-01/ AM-02/ AM-03	≥ 0.5 to ≤ 3.5	☐ ON ☐ OFF ☐ N/A	☐ SAT ☐ UNSAT ☐ N/A
				☐ ON ☐ OFF ☐ N/A	☐ SAT ☐ UNSAT ☐ N/A
	☐ Dome TA-54-375 PermaCon	PDI-003/ PDI-004	≥ 1.0 to ≤ 2.5	☐ ON ☐ OFF ☐ N/A	☐ SAT ☐ UNSAT ☐ N/A
				☐ ON ☐ OFF ☐ N/A	☐ SAT ☐ UNSAT ☐ N/A

6.[6] **($)** All combustible/flammable liquids removed from SSSR AREA or attended: (LCO 3.3.1)

Initials / Z# / Date	Initials / Z# / Date	Initials / Z# / Date
Initials / Z# / Date	Initials / Z# / Date	Initials / Z# / Date

Comments: _____

7.1[1] Performed By: _____ / _____ / _____ / _____
Operator (Print) Signature Z # Date

7.1[6] Reviewed By: _____ / _____ / _____ / _____
Supervisor/Designee (Print) Signature Z # Date

ATTACHMENT 6
Page 1 of 1

TA-54 AREA G EMPTY CONTAINER DATA SHEET

5.[57][D] Date: _____
Original Container No.: _____
New Container No.: _____

Container Type: ☐ Drum ☐ SWB
Container Size: ☐ 30-gal ☐ 55-gal ☐ 85-gal ☐ 110-gal ☐ N/A

Liner present: ☐ Yes ☐ No

Liquids present: ☐ Yes ☐ No

Lead present: ☐ Yes ☐ No

Container verified empty: ☐ Yes ☐ No

Certified container weight (lb): _____ lb

Calibrated Scale: Cal. File No.: _____
Manufacturer: _____
Model: _____
Last Cal Date: _____
Last Cal Date within 1 yr: ☐ YES ☐ NO

Comments: _____

7.1[1] Performed By: _____ / _____ / _____ / _____
Operator (Print) Signature Z # Date

7.1[6] Reviewed By: _____ / _____ / _____ / _____
Supervisor/Designee (Print) Signature Z # Date

EP-AREAG-WO-DOP-1085, TA-54 Area G Sludge Remediation SSSR Activities

LAUR-14-24893

TA-54 Area G
Sludge Remediation SSSR Activities

Effective Date: 03/04/14

Hazard Class:	☐	Low	☒	Moderate	☐	High/Complex
Usage Mode:	☐	Reference	☒	UET	☐	Both UET & Reference

The Responsible Manager has determined that the following organizations' review/concurrence is required for the initial document and for major revisions, a same type and level of review is required. Review documentation is contained in the Document History File:

Engineering
Quality Assurance
Radiation Protection
Industrial Hygiene and Safety
Subject-Matter Expert
Shift Operations Manager
Support-Services Subcontractor
Environmental Stewardship
Criticality Safety
Criticality Safety Officer

Responsible Manager, LTP-DDP Operations Manager

Name (print)	Z#	Signature	Date
Lou Jalbert	121997	/s/ Lou Jalbert	03/03/14

Classification Review: ☐ N/A ☒ Unclassified ☐ UCNI ☐ Classified _____

Name (print)	Z#	Signature	Date
Art Crawford	080070	/s/ Art Crawford	03/04/14

Working Copy / Information Only (circle one)
Initials / Date: _____/_____

This document fully satisfies the requirements of P300, Integrated Work Management, in order to systematically describe the work activity, the associated hazards, and the controls that **MUST** be employed to mitigate the risks.

REVISION HISTORY

Document Number	Issue Date	Action	Description
TRU-DOP-0334, R.0	September 2006	New Document	
TRU-DOP-0334, R.1	October 2006	Major Revision	Added liner puller activity and revised Attachment A.
TRU-DOP-0334, R.1 IPC-1	October 2006	Immediate Procedure Change	Added bullet items in Section 4.2 to clarify WIPP process steps prior to remediation.
TRU-DOP-0334, R.1 IPC-2	November 2006	Immediate Procedure Change	Added additional controls for crane/lifting device operations in Sections 6.2 and 6.5. Added new steps 3, 7, 10, and 11 and modified step 6 in Section 6.5.
TRU-DOP-0334, R.2 IPC-1	December 2006	Immediate Procedure Change	Modified Section 6.5 to include liner notching and made minor editorial changes.
TRU-DOP-0334, R.3	June 2007	Major Revision	Added Section 5. 0 and detail for steps contained in Section 7.0. Added requirement to limit inventory to 0.47 PE-Ci inside the PermaCon.
TRU-DOP-0334, R.4	July 2007	Major Revision	Complete rewrite to address issues raised during Management Safety Assessment.
TRU-DOP-0334, R.5	July 2007	Minor Revision	Minor revisions based on Management Safety Assessment findings.
TRU-DOP-0334, R.6	October 2007	Major Revision	Improvements based on operator input / operational experience.
TRU-DOP-0334, R.7	February 2008	Minor Revision	Clarified reporting requirements for a slipped/dropped drum. Made changes to bring procedure into alignment with the Command and Control Procedure.
TRU-DOP-0334, R.8	April 2008	Minor Revision	Revised step 7.1.30.
TRU-DOP-0334, R.9	May 2008	Major Revision	Improvements based on operator input / operational experience.
EP-DOP-2108, R.0	July 2008	Minor Revision	Improvements based on drum gasket fact finding.
EP-DOP-2108, R.1	October 2008	Minor Revision	Added additional Warnings, Cautions, and steps to align with revised JHA. Removed sections on Immobilizing liquids and injected steps for handling liquids on tops of rigid liners to all other sections. Reformatted to EWMO procedure format
EP-DOP-2108, R.2	January 5, 2009	Minor Revision	Change “Energy Solutions” to “Support Services Subcontractor”. Modify the Post Performance Section and delete Attachments 6 and 7 as this function is covered in P300. Updated the training requirements (Section 7.1[5]) for LANS and Support Services Subcontractor. Added “TRU Project Team Lead” in various places to allow for LANS personnel to perform same work as Support Services Subcontractor.
EP-DOP-2108, R.3	May 7, 2009	Major Revision	Revised procedure to implement the TSR (ABD-WFM-002, Page Change 20) to remove TRU WASTE open container control requirement for opening only one container at a time. Added two new references and deleted a duplicate requirement for safety glasses. Also, corrected Attachment 2, Column 1 from “0.47 PE-C” to “0.47 PE-Ci”.

REVISION HISTORY (continued)

Document Number	Issue Date	Action	Description
EP-DOP-2108, R.3 IPC-1	May 7, 2009	IPC -1	Delete the step on Attachment 2, Page 1 of 2 to "verify no other waste containers are open prior to opening container" and the operator signoff.
EP-DOP-2108, R.4	May 2009	Major Revision	Revised procedure to add a new section 8.10 to process debris waste. Incorporated Standing Order EP-SO-2119 R/0, Dome 231 PermaCon Feed Drum Review. Changed other sections to enhance the use of the procedure. Added a new Attachment 5 and changed other attachments to enhance the use.
EP-DOP-2108, R.5	June 2009	Major Revision	Revised section 9.10 to eliminate the use of the second lift/tilt unit. Revised sections 9.5 and 9.6 to enhance the process of installing the drum lid ring and provided new torque requirements for a Myers and Skolnik drum lid ring. Revised Attachment 2 to document the process of installing and torqueing the drum ring/lid closure. Revised Section 8 to add additional equipment and consumables. Added a tolerance range to torqueing the filter throughout the procedure. Deleted step 9.4[11] as not required to be performed. Added a step in the Precaution and Limitation section describing the difference between a Myers and Skolnik drum. Made editorial corrections throughout the procedure.
EP-DOP-2108, R.6	June 15, 2009	Minor Revision	Deleted "bottom of" on last bullet in Precaution and Limitations. Changed Step 9.4[14] to "receive rigid liner" to clarify the step. Added "if necessary" to step 9.4[32]. Moved note and step 9.10[5][F] (chocking of wheels) to become 9.10[5][A] and renumbered subsequent steps. Made editorial corrections.
EP-DOP-2108, R.7	June 2009	Major Revision	Revised procedure to add the "Controlled Dome 231 Permacon Drum List" to the Reference Section. Added two statements to the Precautions and Limitations Section. Reworded 8.1[4] so that a CCP Representative **SHALL** be available. Changed the title on steps 9.2[1] and 9.2[2] to "Controlled Dome 231 Permacon Drum List". Changed the weight of "850" and "930" respectively to "750" in step 9.2[9] to match the requirements of the lift/tilt unit. Revised step 9.2[16] to document waste stream and EPA codes on Attachment 2. Deleted "by the pigtail" on step 9.10[5][J] 1st bullet. Added a watermark "Example" to Attachments 1 and 4. Revised Attachment 2 to reflect correct work flow and to document Drum Number instead of Container Waste ID. Made editorial corrections as necessary.
EP-DOP-2108, R.8	July 7, 2009	Major Revision	Added Precautions and Limitations regarding use of PhotoVac 2020 or equal® VOC Detector and for the detection of pungent smells. Added steps to perform VOC sampling with PhotoVac 2020 or equal® VOC Detector. Removed reference on Attachments 1 and 3 that the forms can be found in the electronic folder. No additional hazards were identified in this revision.

REVISION HISTORY (continued)

Document Number	Issue Date	Action	Description
EP-DOP-2108, R.9	July 2009	Major Revision	Revised sections 9.3, 9.4, 9.5, and 9.10 to add a warning to move to a safe distance until the VOC reading is a value below the adjusted VOC limit, added steps to allow approximately 5 minutes to allow time for the drum to vent, and to repeat the VOC reading until the levels get below the adjusted VOC limit or told to stop by Supervision. Changed "5" ppm to "adjusted VOC limit" throughout the procedure. Deleted steps in sections mentioned above to remove filter and bungs. Changed "2020 ComboPRO" to "PhotoVac 2020" throughout the procedure. Made editorial corrections, as necessary. Added a new section 10.6, Elevated VOC Levels for an immediate response to elevated VOC levels in the PermaCon.
EP-DOP-2108,R10	September 16, 2009	Minor Revision	Revised Section 9.5 to add additional steps for handling, storing and processing liquids from the vacuum in 231 PermaCon. No additional hazards were identified during this revision.
EP-AREAG-WO-DOP-0219, R.0	September 21, 2009	Major Revision	Add instructions for capturing data related to the quantity of free liquids in a waste container. Make editorial corrections such as changing the document number and title. No new hazards were introduced during this revision.
EP-AREAG-WO-DOP-0219, R.1	April 27, 2010	Major Revision	Revised procedure to change the title to "TA-54 Area G Sludge Remediation Activities". Incorporated process improvements with step changes in section 8, 10, and 13. Updated the purpose, scope, references, and precaution and limitations, as necessary to reflect the current work activities. Deleted the section of confinement layers as the steps are performed in liquid remediation (redundant steps). This revision constitutes a complete re-write; therefore, revision bars are omitted. Made editorial corrections, as necessary. No new hazards are being introduced by this revision.
EP-AREAG-WO-DOP-0219, R.2	May 6, 2010	Minor Revision	Revise procedure to delete Step 9[11][C][b], move Step 11[14] after Step 11[20], and add a note that the new Step 11[20] and 13[8] to permit the steps to be performed out of sequence. Made editorial corrections, as necessary. No new hazards are being introduced by this revision.
EP-AREAG-WO-DOP-0219, R.3	June 10, 2010	Minor Revision	Added clarification to Step 9[39] regarding dispositioning of 85-gal drums. This revision did not change the original purpose, scope, or intent of the approved document. No new hazards are being introduced by this revision.

REVISION HISTORY (continued)

Document Number	Issue Date	Action	Description
EP-AREAG-WO-DOP-0219, R.4	Training Only	Major Revision	Revise procedure to incorporate the SSSR requirements from the Area G TSR page change. These changes include increasing the SSSR Process Area PE-Ci limit to 2.5 PE-Ci and the Area G SSSR activity limit of 5 SSSR activities. While the allowable PE-Ci value is being increased no new hazards are being introduced by this revision. Make editorial corrections, as necessary, such new ConOps format. Revise procedure to incorporate WIPP WAC changes. This revision is a total rewrite and revision bars have been omitted.
EP-AREAG-WO-DOP-0219, R.5	August 13, 2010	Minor Revision	Make editorial corrections, as necessary, such as correcting wording discrepancies between the procedure text and attachments. This revision does not affect the original purpose, scope, or intent of the approved document. This revision does not introduce any new hazards.
EP-AREAG-WO-DOP-0219, R.6	September 23, 2010	Major Revision	Revise procedure to change “less than” to “approximately” in Steps 8.[55] and 8.[57]. Added “**($)**” and “LCO 3.7.4” to Step 13.1[1]. Reword Step 9.[16] as recording the time out and process date on Attachment 1 of EP-AREAG-FO-AP-0104 is not required. Make minor step and performer changes to be consistent throughout the procedure. Make editorial corrections as necessary. No new hazards are being introduced as a result of this revision.
EP-AREAG-WO-DOP-0219, R.7	March 16, 2011	Major Revision	Revise procedure to incorporate additional waste drum inspections, precautions associated with self-tapping filters, and corrections to the SSSR Process Area layout (PFITS Issue 2010-2739). Make editorial corrections as necessary. No new hazards are being introduced by this revision.
EP-AREAG-WO-DOP-0219, R.7 IPC-1	March 16, 2011	Immediate Procedure Change	Revise procedure to incorporate NCS-CSLA-11-043, Sludge Remediation Nuclear Criticality Safety Limit Approval. Make editorial corrections as necessary. No new hazards are being introduced by this revision.

REVISION HISTORY (continued)

Document Number	Issue Date	Action	Description
EP-AREAG-WO-DOP-0219, R.8	May 23, 2011	Major Revision	Revise procedure to incorporate Revision 0.26 to the Area G TSRs. Incorporate editorial corrections as necessary. This revision does not introduce any new hazards.
EP-AREAG-WO-DOP-0219, R.9	October 23, 2012	Major Revision	Revise procedure to incorporate the requirements of the Area G TSR Page Change 0.32. Delete instructions for preparing and closing a drum and for unpacking an overpack; and reference EP-AREAG-WO-DOP-0211 instead. Make editorial corrections as necessary. This revision does not introduce any new hazards. This is a total rewrite and revision bars have been omitted.
EP-AREAG-WO-DOP-0219, R.9 IPC-1	August 15, 2013	IPC	Revise procedure to incorporate Revision 0.34 to the Area G TSRs. Make editorial corrections as necessary. This revision does not introduce any new hazards.
EP-AREAG-WO-DOP-0219, R.10	September 23, 2013	Major Revision	Revise procedure to incorporate current procedural standards and incorporate criticality controls. Incorporate NCS-CSLA-12-003 and NCS-CSLA-13-049. Revise procedure to allow for the removal of PIDs from parent waste containers and to provide instructions for the removal of liquid from a drum without a liner by drilling through the parent drum. The revision does not introduce any new hazards. This revision is a total rewrite and revisions bars have been omitted.
EP-AREAG-WO-DOP-1085. R.0	September 30, 2013	Major Revision	Revise procedure to incorporate requirements of ABD-WFM-002 Rev 2.0 Technical Safety Requirements (TSRs) for Technical Area 54, Area G. No new hazards are introduced by this revision. Document number changed; therefore, revision number reverted to zero. This revision does not capture changes captured under EP-AREAG-WO-DOP-0219, R.9 IPC-1 and R.10.
EP-AREAG-WO-DOP-1085. R.1	October 23, 2013	Major Revision	Revise procedure to reconcile the Area G BIO 2.0 implemented version of the procedure with the changes made to EP-AREAG-WO-DOP-0219 during the development of the Area G BIO 2.0 version of the procedure. This revision does not introduce any new hazards. This revision is a total rewrite and revision bars have been omitted.

REVISION HISTORY (continued)

Document Number	Issue Date	Action	Description
EP-AREAG-WO-DOP-1085. R.1 IPC-1	October 28, 2013	IPC	Revised to add "into" to Step 6.[43] (PLACE the vacuum bags into daughter waste containers). Change "6.[23][F]" to "5.[23][F]" on Attachment 1. This revision does not introduce any new hazards.
EP-AREAG-WO-DOP-1085. R.2	December 11, 2013	Major Revision	Revise procedure to incorporate instructions for removing Prohibited Items from the waste container. This revision does not introduce any new hazards. This revision is a total rewrite and revision bars have been omitted.
EP-AREAG-WO-DOP-1085. R.2 IPC-1	January 4, 2014	IPC	Page 60; Deleted Step 16 and added "Close the container in accordance with EP-AREAG-WO-DOP-1069.
EP-AREAG-WO-DOP-1085. R.2 IPC-2	January 17, 2014	IPC	Revised to correct CSLA references. throughout procedure. Added Note before 7[13[C], Separate Prohibited Item Drum must be used for each parent drum (NCS-CSED-11-049). Corrected Steps 7[15], [16], and [17].
EP-AREAG-WO-DOP-1085. R.3	January 31, 2014	Major Revision	Revise procedure to allow for moving closed TRU daughter waste containers from the SSSR process area to either staging or other location outside of the CA but within the SSSR AREA. Revise procedure to capture the P101-4 and P101-25 requirements for ordinary and critical lifts and distinguish between LANL and subcontractor requirements. Make editorial corrections as necessary. This revision does not introduce any new hazards.
EP-AREAG-WO-DOP-1085. R.4	February 28, 2014	Major Revision	Revise procedure to incorporate instructions for the implementation of the Area G Page Change 2.3 (e.g. change SR 4.1.1 to SR 4.1.1.1). Make editorial corrections as necessary. This revision does not introduce any new hazards.
EP-AREAG-WO-DOP-1085. R.5	March 4, 2014	Major Revision	Revise Section 6 to allow starting the drilling/liquid removal from the top of the drum rather than the bottom of the drum in order to accommodate drums with a lot of liquid.. Make editorial corrections as necessary. This revision does not introduce any new hazards.

TABLE OF CONTENTS

Section Page

TITLE PAGE 1
REVISION HISTORY 2
TABLE OF CONTENTS 8

1. PURPOSE 9

2. SCOPE 9

3. PRECAUTIONS AND LIMITATIONS 10

4. PREREQUISITE ACTIONS 16
4.1 Planning and Coordination 16
4.2 Materials and Equipment 17
4.2.1 Measurement and Test Equipment (M&TE) 17
4.2.2 Special Tools and Equipment 17
4.2.3 Consumables 19
4.3 Field Preparation 19

5. INSTRUCTIONS—LINED SLUDGE DRUM LIQUID REMEDIATION 22

6. INSTRUCTIONS—UNLINED SLUDGE DRUM LIQUID REMEDIATION 40

7. INSTRUCTIONS—SLUDGE DRUM PROHIBITED ITEM REMEDIATION 53

8. INSTRUCTIONS—SECURING ENCLOSURE WITH IN-PROCESS WASTE CONTAINER 67

9. POST-PERFORMANCE ACTIVITIES 69
9.1 Disposition 69
9.2 Records Processing 70

10. REFERENCES 71

Attachments
Attachment 1, TA-54 Area G Lined Sludge Drum Remediation Data Sheet 72
Attachment 2, TA-54 Area G Unlined Sludge Drum Remediation Data Sheet 75
Attachment 3, TA-54 Area G Sludge Prohibited Item Daughter Drum Data Sheet 77
Attachment 4, TA-54 Area G TRU Drum SSSR Activity Secured Enclosure Data Sheet 78
Attachment 5, TA-54 Area G Empty Container Data Sheet 79

1. PURPOSE

This procedure provides instructions for remediating homogeneous solids waste forms packaged within a removable drum liner in 55-gal and larger drums and within drums without a removable drum liner that contain Waste Isolation Pilot Plant (WIPP) non-conforming items. This procedure applies to the Dome TA-54-231 and Building TA-54-412 sorting, segregating, size reduction, and repackaging (SSSR) AREAS.

2. SCOPE

This procedure applies to waste and support-services subcontractor personnel who perform sludge remediation activities on transuranic (TRU) WASTE containers. Personnel place the waste into WIPP-approved packages.

CS **(*)** Section 7, Sludge Drum Prohibited Item Remediation, may only be performed within the Building 412 contamination control enclosure. (NCS-CSLA-13-049)

This procedure is performed in conjunction with EP-AREAG-FO-AP-1072, TA-54 Area G SSSR AREA TRU MAR Inventory Control, in order to batch the drums in accordance with the following limits:

- **($)** The SSSR AREA contains less than or equal to 18 PE-Ci EQUIVALENT COMBUSTIBLE WASTE in process. [LCO 3.1.1(1)]
- **($)** The SSSR AREA contains less than or equal to 18 PE-Ci EQUIVALENT COMBUSTIBLE WASTE staged in closed containers. [LCO 3.1.1(2)]
- CS **(*)** Each drum has a total maximum fissile gram equivalent (FGE) of less than or equal to 200 FGE. (NCS-CSLA-11-043, NCS-CSLA-12-003, and NCS-CSLA-13-049)
- CS **($) (*)** Drum batch to be loaded into a standard waste box (SWB) contains a maximum fissile gram equivalent (FGE) of less than or equal to 325 FGE in order for the resulting daughter SWB to be considered a Low-FGE SWB and to satisfy the FGE requirement of DOE/WIPP-02-3122 (AC 5.6.3, NCS-CSLA-12-003, NCS-CSLA-13-049, and DOE/WIPP-02-3122)

This procedure is performed in conjunction with the Waste Compliance and Tracking System (WCATS), in order to populate WCATS with waste container information, to generate Transuranic (TRU) Waste Storage Records (TWSRs), to generate labels, and to associate new daughter waste containers with the parent waste container.

This procedure does not provide instructions and steps for processing drums discovered as bulging or UNVENTED DRUMS.

2. SCOPE (continued)

The SSSR AREA boundary is the same as the DEFINED AREA boundary and the SSSR staging area for the SSSR process area (e.g., contamination control enclosure) is within the boundary of the DEFINED AREA.

This procedure does not contain instructions for the remediation of sealed containers permitted by Specific Administrative Control (SAC) 5.7.18.

3. PRECAUTIONS AND LIMITATIONS

- Activities, items, and containers **SHALL** satisfy approved design specification, regulatory requirements, process-specific parameters, and procedural requirements. Activities, items, or containers that do not conform to the approved specifications and requirements are considered nonconforming and Nonconformance Reports (NCRs) **SHALL** be generated in accordance with P330-6, Nonconformance Reporting, as required.

- When a worker observes an unsafe condition or act that may pose an imminent danger or other safety concern/hazard, the worker has the authority and responsibility to inform the worker engaged in the work and request that the work activity be paused and/or stopped based on the risk posed to the individual, the employees, the environment, or the facility in accordance with P101-18, Procedure for Pause/Stop Work.

- If, at any time while performing this procedure, any smell or odor that is pungent, sharp, or otherwise irritating to the eyes, nose or throat occurs, workers **SHALL** stop work and notify supervision for resolution, and reseal the container if it can be safely performed.

- This procedure contains steps marked with **($)** required to implement the TA-54 Area G Safety Basis (e.g., TSR). These steps may not be changed without engineering approval to ensure the safety envelope is maintained.

- Those steps of the procedure that are the direct implementation of a criticality safety administrative requirement are identified by a **(*)** and circle-CS symbol (CS) to the left of the step. These steps alert the user that the identified step is part of assuring compliance with criticality safety limits. The identified steps are of equal importance to all other steps from a criticality safety perspective.

- To comply with the intent of the As Low As Reasonably Achievable (ALARA) Program, all personnel **SHALL** apply the principles of time, distance, and shielding when working with radiological materials.

3. PRECAUTIONS AND LIMITATIONS (continued)

- Do not disturb or touch wild animals, dead animals, nesting areas, droppings, or surfaces with mold growth to avoid exposure to biological threats (e.g., snakes, rodents, rodent droppings, Hanta virus, Bubonic plague, spiders, West Nile virus, molds).

- Seek shelter in a grounded building or vehicle during lightning or inclement weather.

- Avoid slips, trips, and falls by wearing the proper footwear with slip-resistant soles and using handrails when using stairs. Use established pathways when available and avoid walking on uneven or unstable surfaces.

- This procedure is only for use with Myers 5532 drums and Skolnik drums.

- **($)** A spotter **SHALL** be present for TRU WASTE container lifts planned to exceed 4 ft above the ground surface. If the planned lift will exceed 12 ft from the bottom of the container to the ground, a critical lift plan **SHALL** be used. (SAC 5.7.8)

- All critical lift plans executed by Los Alamos National Laboratory (LANL) personnel **SHALL** be developed using Attachment B, LANL Critical Lift Plan, of P101-25, Cranes, Hoists, Lifting Devices, and Rigging Equipment.

- The instructions in this procedure satisfy the P101-25 ordinary lift requirements and the use of LANL Form 1611, Ordinary Lift Procedure, is not required. Not all of the items listed on Form 1611 are captured in this procedure because this procedure is performed using gantry cranes and forklifts in preapproved locations and lifts standard waste containers of a known size and volume.

- Forklift operations are governed by the LANL procedure P101-4, Forklift and Powered Industrial Trucks. P101-4 requires the completion of the applicable sections of a LANL procedure P101-25 Attachment B for critical lifts involving a forklift or powered industrial truck. Forklift operations not involving a critical lift (e.g., load suspended below the forks of the forklift) are not required to comply with the requirements of P101-25.

- Based on review of Section 5.4.2 of CCP-AK-LANL-004 (AK4), Waste Stream LA-MIN03-NC.001, homogenous sludge drums within this waste stream do contain tritium; however, concentrations are conservatively estimated to be less than 5% of the total activity on a drum by drum basis.

3. PRECAUTIONS AND LIMITATIONS (continued)

- Review available information to minimize hazards, including RTR videotapes (as appropriate) and other applicable documentation, before performing operations.

- Personnel protective equipment (PPE) **SHALL** be worn (i.e., safety shoes, safety glasses with side shields, leather gloves, respirator, and hearing protection) as required by the Radiological Work Permit (RWP) and Integrated Work Document (IWD).

- When performing a manual lift, personnel **SHALL** use proper lifting techniques, inspect the route, and evaluate the load in accordance with EP-DIV-POLICY-20057, EWMO Health and Safety Policy – Manual Movement.

- Sharp objects **SHALL** be covered and properly stored when not in use. Wear cut/puncture resistant gloves and cut away from your body when in use.

- Do not manipulate drum dollies into place with feet; always use an approved tool.

- Only trained and qualified personnel authorized by the supervisor may approach an elevated drum/rigid liner. Personnel **SHALL** not place hands or arms or any portion of the body under the elevated load to prevent serious personal injury.

- When using the impact wrench to remove the slack on the ringbolt, do not run the bolt tight against the stop. Doing so may cause an over torque condition. The calibrated torque wrench must be used to make and verify the torque.

- When work cannot be accomplished as described in this procedure, or accomplishment of such work would result in an undesirable situation, a condition adverse to quality, or an unacceptable safety risk, the work **SHALL** be suspended until the appropriate change provisions are implemented. In the event of suspended operations, **NOTIFY** the applicable Operations Manager and TA-54 Operations Center.

- If a drum or liner is dropped any distance due to slipping off a lifting fixture (i.e., Parrot Beak, lifting sling, etc.) then work will stop and the TA-54 Operations Center and Radiological Control Technician (RCT) will be notified. Work will not resume until the area is released by the TA-54 Operations Center.

- If using an impact wrench to remove a drum ring, use a wrench to hold the lock-nut. Do not use fingers.

3. PRECAUTIONS AND LIMITATIONS (continued)

- Good Housekeeping (i.e., slips, trips, falls, emergency egress, cleanliness, tool and equipment storage) **SHALL** be maintained and documented on the applicable round sheet.

- Personnel **SHALL** be aware of heat and cold stress indicators and observe co-workers. During extreme weather conditions, the PIC **SHALL** contact the deployed IH to evaluate and recommend an appropriate work/rest schedule.

- Ensure electrical tools meet National Electrical Code (NEC) or Underwriters Laboratories (UL) requirements and are double insulated or properly grounded and inspected before use unless ESO approved.

- All drums to be processed **SHALL** have a LTP Waste Remediation Safety Evaluation Data Sheet that has been reviewed and approved by TRU Operations.

- Personnel should be adequately hydrated before, during, and after work period.

- Disconnect tools from power source before changing accessories.

- The lifting of drums using the drum hauler unit **SHALL** <u>not</u> exceed 600 lb.

- Personnel **SHALL** determine a Myers drum from a Skolnik drum by the UN stamp located on the drum, as follows:
  - Myers Drum: M020 or MXXX
  - Skolnik Drum: SDCC

- **($)** Each SSSR AREA **SHALL** contain less than or equal to 18 PE-Ci EQUIVALENT COMBUSTIBLE WASTE <u>in process</u>. [LCO 3.1.1(1)]

- **($)** Each SSSR AREA **SHALL** contain less than or equal to 18 PE-Ci EQUIVALENT COMBUSTIBLE WASTE <u>staged in closed containers</u>. [LCO 3.1.1(2)]

- **($)**An SSSR AREA **SHALL** satisfy the following applicable Thermal Separation Distance requirement: [LCO 3.2.1(3)]
  - 24 ft for processing non-METAL CONTAINERS
  - 10 ft for processing non-METAL CONTAINERS with an established STATIONARY FIRE WATCH
  - 10 ft for processing METAL CONTAINERS

3. PRECAUTIONS AND LIMITATIONS (continued)

- The Combustible Restricted Area (CRA) is an area that is around and encloses a DEFINED AREAs where TRANSIENT COMBUSTIBLES and combustible/flammable liquids are strictly controlled to minimize potential of possible fire incidents. The CRA is marked on controlled engineering approved drawings and is approximated by markings in the field. The markings do not have to exactly represent the drawing, but should closely represent the drawing.

- **($)** Within the CRA boundary, Combustible/Flammable Liquids **SHALL** be controlled in accordance with EP-AREAG-FO-AP-1097, TA-54 Area G Combustible/Flammable Liquid Control. (LCO 3.3.1)

CS
- **(*)** No drums greater than 200 FGE will be remediated in this process. (NCS-CSLA-11-043, NCS-CSLA-12-003, and NCS-CSLA-13-049)

CS
- **(*)** No drums less than 55 gal size will be remediated with this process. (NCS-CSLA-11-043, NCS-CSLA-12-003, and NCS-CSLA-13-049)

- The most current list of WIPP-approved filtered vents are on DOE/WIPP 11-3384, CBFO Approved Filter Vents.

- Not Applicable (N/A) is documented on the attachments during the performance of this procedure indicating information that is not required to be recorded.

- Support Services Subcontractors executing this procedure **SHALL** comply with the safety and health requirements documented in contractual agreements with the LANL.

- The Class 2 laser scanning head on the WCATS mobile device can cause eye injury if eye is exposed to the beam. Do not allow eyes of user or observers to become exposed to laser beam.

- The WCATS mobile device contains lithium-ion battery. The operating temperature recommendation for the Workabout Pro 3 (WCATS mobile device) is from -4 degrees F to 122 degrees F. Do not store the WCATS mobile device where temperatures are less than -40 °F or greater than 140 °F. Exposure to extreme temperatures (greater than 140 °F) may cause battery to explode. Keep mobile device out of direct sunlight for extended periods of time when not in use. Do not incinerate, mutilate, short circuit, or disassemble the battery pack. Do not dispose of in municipal waste receptacles. Dispose of in properly marked universal waste disposal areas.

3. PRECAUTIONS AND LIMITATIONS (continued)

- If a physical transfer is postponed or does not take place for any reason after electronic processing in WCATS, then the WCATS task must be REVOKED in WCATS to cancel the move in WCATS.

- WCATS is designed to allow any task performed on the WCATS mobile device to be conducted from the WCATS desktop application. This feature provides additional flexibility in the event the WCATS mobile device becomes inoperable or malfunctions or the operator may choose to perform a task using either method.

- **($)** A STATIONARY FIRE WATCH **SHALL** be present in the SSSR process area (e.g., contamination control enclosure) whenever TRU WASTE is exposed. He or she **SHALL** have no other assigned duties than making fire safety observations, notifying building occupants and the fire department of an emergency, preventing a fire from occurring, and/or extinguishing small fires as trained. (SAC 5.7.17)

- Compliance with LCO 3.2.1 and the performance of SR 4.2.1.1 for the thermal separation distance are not verified during the performance of this procedure because of the design of the DEFINED AREAS. All DEFINED AREAS are created specifically for receiving either a METAL CONTAINER or non-METAL CONTAINER and WCATS assures compliance by not authorizing a non-METAL CONTAINER to be moved into a METAL CONTAINER only DEFINED AREA. However, a METAL CONTAINER may be moved into a non-METAL CONTAINER DEFINED AREA because the thermal separation distance requirements of the non-METAL CONTAINER DEFINED AREA are greater that the thermal separation distance requirements of the METAL CONTAINER.

- Compliance with LCO 3.1.1 is that each SSSR AREA may contain less than or equal to 18 PE-Ci EQUIVALENT COMBUSTIBLE WASTE in process and less than or equal to 18 PE-Ci EQUIVALENT COMBUSTIBLE WASTE staged in closed containers. The location of the in-process and closed staged waste containers is not stipulated by the Area G TSR other than within the SSSR AREA and therefore closed in-process daughter containers could coexist with closed staged containers outside of the SSSR process area (lower case process area) such as outside of a contamination control enclosure.

- ($) LCO 3.1.7 requiring that above-ground TRU waste drums with greater than or equal to 200 PE-Ci be DOUBLEPACKED is not applicable to SSSR activities. (LCO 3.1.7)

- Not securely attaching the discharge end of the tubing to the receiving waste container or not placing the receiving waste container on a flat-stable surface could result in a liquid spill and the potential contamination (e.g., radiological or chemical) of personnel and equipment from the liquid.

4. PREREQUISITE ACTIONS

4.1 Planning and Coordination

NOTE *The listed prerequisite actions may be completed in any order.*

Supervisor or designee

[1] **ENSURE** that the procedure is the latest revision, and **IDENTIFY** this document as Working Copy or Information Only on Title Page.

[2] **ENSURE** that the sludge remediation process is scheduled and authorized on the TA-54 Area G facility schedule.

[3] **ENSURE** that an RWP has been issued for the planned activity.

[4] **ENSURE** that, as a minimum, the following personnel trained in the use of this procedure are available for this procedure, for each SSSR AREA, as required:

- Two Waste Handling Operators
- Three RCTs
- **($)** One STATIONARY FIRE WATCH [LCO 3.2.1(3) and SAC 5.7.17]
- One Supervisor

[5] **ENSURE** that a pre-job briefing is conducted for all personnel involved in the performance of this procedure, in accordance with EP-DIV-AP-0112, EWMO Pre-Job Briefings, or other approved process.

[6] **IF** the outdoor temperature is approaching or is below 32 °F,
AND DIRECTED by supervision,
THEN VERIFY that the drums selected to be processed have been in a heated environment such as a heated transportainers (TA-54-545 and TA-54-546) or Dome 33 for a minimum of 72 hours.

[7] **ENSURE** that the TRU daughter waste container labels (e.g., Shorty barcode labels) have been obtained from the Waste Help Team (wastehelp@lanl.gov), as necessary.

4.2 Materials and Equipment

NOTE *The list of equipment is not an all inclusive list and additional tools and equipment may be used as necessary.*

4.2.1 Measurement and Test Equipment (M&TE)

NOTE *Torque wrenches are calibrated either as a percentage of full scale or a percentage of indicated value. The torque wrench accuracy information is found on the Calibration Certificate document. Torque wrenches are not calibrated in, nor are they to be used below 20% of their full range.*

Waste Handling Operator

[1] **ENSURE** that the following measuring and test equipment are available, as required:
- Calibrated torque wrench capable of torquing to 120 in-lb
- Calibrated torque wrench capable of torquing 12 to 75 ft-lb

[2] **IF** torque wrench calibration date is expired,
THEN:

[A] **IDENTIFY** the item is not to be used (e.g., apply a Calibration Expired label) and segregate the item to prevent use.

[B] **NOTIFY** supervisor for guidance.

4.2.2 Special Tools and Equipment

NOTE *The list of special tools and equipment is not an all inclusive list and additional tools and equipment may be used as necessary.*

Waste Handling Operator

[1] Ensure that the following special tools and equipment are available, as required:
- Certified A-Frame Gantry Crane
- Drill
- Drum and Rigid liner rigging apparatus
- Drum dollies
- Waste Container Labels
- Item ID Labels
- Jig-Saw

4.2.2 Special Tools and Equipment (continued)

- Radioactive Labels
- Saws-all
- Certified HEPA wet vacuum and dry vacuum
- RP-approved HEPA vacuum bags
- Catch basin & pedestal
- Cutting Ratchet
- Drum hauler unit
- Certified torque wrenches
- Certified liner lifting device
- DOT 7A Type A 55-gal drums
- DOT 7A Type A 85-gal drums
- Certified WIPP-approved filters
- Kevlar® sleeves
- WCATS mobile device
- 15/16 in. socket and ratchet
- 15/16 in. open end or box wrench
- Dead-blow mallet or equivalent
- 5-gal pail or equivalent
- Fire blankets, Metal X fire extinguishers, and ABC fire extinguishers (STATIONARY FIRE WATCH use)
- MultiRAE or Photo Ionization Detector (PID) Photo Vac
- Fire blankets, Metal X fire extinguishers, and ABC fire extinguishers (STATIONARY FIRE WATCH use)

NOTE *An F130N Self-contained Electro Hydraulic Cutting Tool contains approximately 0.16 gal of hydraulic fluid which has been evaluated for flammability and determined to <u>not</u> require documentation.*

- Hydraulic Shears (e.g., F130N Self-contained Electro Hydraulic cutting Tool or equivalent)
- Peristaltic pump

4.2.3 Consumables

NOTE *The list of consumables is not an all inclusive list and additional consumables may be used as necessary.*

Waste Handling Operator

[1] **ENSURE** that the following consumables are available, as required:

- Absorbent
- Drill/Spade Bits, up to 2 in.
- Kim-wipes or equivalent
- Personnel Protective Equipment
- Poly Liner
- Saw-Blades
- Tape
- Cut Resistant Gloves (or Leather Gloves)
- Paring Knife
- Filtered Bags
- Room Temperature Vulcanized (RTV)-732 or equivalent
- Waterproof vacuum bags to line the wet/dry HEPA vacuum (e.g., plastic bag)
- 55-gal drum lids and drum lid closure rings
- Peristaltic pump tubing

4.3 Field Preparation

Supervisor or designee

[1] **ENSURE** that the applicable inspection sheet is completed for the work locations in accordance with EP-AREAG-FO-DOP-1087, TA-54 Work Release Inspection Sheets.

[2] **ENSURE** that the applicable round sheet is completed for the work location:

- EP-AREAG-WO-DOP-1162, TA-54-231 Area G Dome 231 PermaCon Round Sheet
- EP-AREAG-WO-DOP-0220, TA-54 Area G Building 412 Containment Tent Operator Round Sheet

[3] **ENSURE** that new TRU daughter SWBs/drums have been-prepared in accordance with EP-AREAG-WO-DOP-1069, TA-54 Area G TRU SWB/Drum Operations, have been created in WCATS using the TRU DRUM PREPARATION application and that the Shorty barcode labels have been applied to the new TRU daughter waste containers in accordance with EP-DIV-DOP-20043, LTP TRU Waste Container Labeling.

4.3 Field Preparation (continued)

[4] **ENSURE** that new Prohibited Item Daughter Drums (aerosol and pressurized cylinders) are available, as necessary.

[5] **ENSURE** that the waste container (e.g., 55-gal drum) to be processed has been moved to the applicable building/structure (e.g., Building 412 or Dome 231).

[6] **ENSURE** that a pre-operational inspection of each drum handler unit has been performed in accordance with EP-DIV-DOP-20086, EWMO Division Specific Forklift and Drum Handler Equipment Operations.

[7] **ENSURE** that the crane to be used and hoisting and rigging materials (e.g., lifting magnets and slings and crane) have a current inspection in accordance with P101-25.

[8] **IF** performing Section 5, Lined Sludge Drum Liquid Remediation, or Section 6, Unlined Sludge Drum Liquid Remediation,
THEN:

[A] **($) ENSURE** that the total volume of flammable liquids within the boundaries of the SSSR AREA for operation and maintenance activities is less than or equal to <u>seven gallons</u>, and **CHECK** (√) SAT or UNSAT on Attachment 1 or 2, as applicable. [LCO 3.3.1(1a)]

CS

[B] **(*) ENSURE** that the following requirements are satisfied, and **CHECK** (√) SAT or UNSAT for each item on Attachment 1 or 2, as applicable:
(NCS-CSLA-11-043, NCS-CSLA-12-003, and NCS-CSLA-13-049)

- Drums are 55 gal or larger for the remediation process
- Each drum is ≤ 200 FGE for this process
- Total FGE value of drums to be placed in a daughter SWB is less than or equal to 325 FGE (Section 6 only)

[9] **VERIFY** the following with the TA-54 Operations Center:

- DEFINED AREAS involved in the work activities are in the OPERATION MODE.
- Area G is in Staffing Condition 1 (one), as defined in EP-DIV-AP-20059, Watchbill Administration.

4.3 Field Preparation (continued)

CS

[10] **(*) ENSURE** that the waste containers to be staged or processed in the SSSR AREA have been batched in accordance with EP-AREAG-FO-AP-1072. (NCS-CSLA-11-043, NCS-CSLA-12-003, and NCS-CSLA-13-049)

[11] **IF** performing SSSR processing activities in a radiological contamination control tent, **THEN:**

[A] **ENSURE** that the initial contamination control enclosure approval has been completed in accordance with RP-1-DP-65, Radiological Containments, as required.

NOTE *In accordance with RP-1-DP-65, Radiological Containments, a containment tent that is in place for greater than 30 days the containment tent **SHALL** be re-inspected by the Fire Protection Engineer at an interval not to exceed 45 days which is documented on the daily inspection checklist.*

[B] **ENSURE** that the radiological contamination control tent has been inspected in accordance with RP-1-DP-65.

[C] **ENSURE** that activities outside of the radiological contamination control tent, such as forklift operations, have been minimized.

NOTE *SWBs may be prepared in advance of the remediation activity and at a location other than the SSSR AREA. As such the lids may be temporarily placed on the SWBs to allow them to be safely transported to the SSSR AREA and then the lids may be removed as necessary to support the remediation process.*

[12] **IF** performing Section 6,
THEN:

CS

[A] **(*) ENSURE** that an SWB has been prepared in accordance with EP-AREAG-WO-DOP-1069, and that one SWB has been staged in the Dome TA-54-231 or Building TA-54-412 SSSR AREA. (NCS-CSLA-12-003 and NCS-CSLA-13-049)

CS

[B] **(*) VERIFY** that there are no High-FGE drums (greater than 200 FGE) staged or stored within 10 ft of the Dome TA-54-231 or Building TA-54-412 SSSR AREA, and **CHECK** (√) SAT or UNSAT on Attachment 2. (NCS-CSLA-12-003 and NCS-CSLA-13-049)

5. INSTRUCTIONS—LINED SLUDGE DRUM LIQUID REMEDIATION

This section is a stand-alone section and may be performed independently of or in conjunction with other Instruction sections.

NOTE 1 *Radiological surveys may be performed as determined necessary [e.g., by an RP representative (e.g., RCT)] any time during the performance of this procedure.*

NOTE 2 *The applicable WCATS desktop remediation task (e.g., 412-REMED) is performed concurrently with this section.*

Supervisor or designee

[1] **ENSURE** that the prerequisites have been completed.

[2] **($) ESTABLISH** a STATIONARY FIRE WATCH in the SSSR process area (e.g., contamination control enclosure), and **DOCUMENT** on Attachment 1. (SAC 5.7.17)

NOTE *The following step adds the PE-Ci value of the waste drums to the <u>in-process</u> waste container value in the WCATS database and performs SR 4.1.1.1 in order to demonstrate compliance with LCO 3.1.1.(1). The following step is performed before physically moving the waste drums into the SSSR process area (e.g., contamination control enclosure).*

[3] **($) ENSURE** that the WCATS INTRA-FACILITY TRANSFER has been completed for moving the waste drums into the SSSR process area (e.g., contamination control enclosure) using a WCATS mobile device or the WCATS desktop application (Grid X of IN-PROCESS). (SR 4.1.1.1)

5. INSTRUCTIONS—LINED SLUDGE DRUM LIQUID REMEDIATION (continued)

WARNING

Disconnect hand tools from power source before changing accessories. Ensure hand tools are double insulated and inspected before use.

CAUTION

If a drum or liner is dropped any distance due to slipping off of a lifting fixture, i.e., Parrot Beak, lifting sling, etc., then work will stop and the TA-54 Operations Center will be notified. Work WILL not resume until the area is released by the TA-54 Operations Center.

Waste Handling Operator

CS

[4] **VERIFY** that there are no open parent containers in the SSSR process area (e.g., contamination control enclosure). (NCS-CSLA-11-043 and NCS-CSLA-13-049)

NOTE *The following step ensures that the waste drums have been physically moved into the SSSR process area (e.g., contamination control enclosure).*

[5] **ENSURE** that the drums to be processed have been moved into the SSSR process area (e.g., contamination control enclosure).

[6] **RECORD** the parent drum number on each page of Attachment 1.

[7] **RECORD** the date that the remediation was initiated and the parent drum weight (lb) on Attachment 1.

[8] **RECORD** the parent drum RCRA designation (EPA codes) from Attachment 1 of EP-AREAG-FO-AP-1072 on Attachment 1.

[9] **VERIFY** that a daughter drum is available to accept the waste and liner from the parent drum, as necessary.

[10] **SECURE** the parent drum to the lifting base plate using an approved fastening harness, if necessary.

[11] **MOVE** the drum hood to the parent drum.

5. INSTRUCTIONS—LINED SLUDGE DRUM LIQUID REMEDIATION (continued)

[12] **REMOVE** the parent drum closure ring.

[13] **PARTIALLY LIFT** the parent drum lid.

[14] **OBTAIN** a volatile organic compound (VOC) reading of the parent drum with a MultiRAE or PID Photo vac, as necessary.

NOTE *The LTP Waste Remediation Safety Evaluation Data Sheet will indicate the presence of tritium inside of a drum.*

[15] **IF** the LTP Waste Remediation Safety Evaluation Data Sheet identified tritium as part of the isotopic breakout for the parent drum,
THEN ENSURE that an RCT monitors for tritium.

[16] **IF** a tritium concentration above the RWP limit is detected,
THEN:

[A] **FOLLOW** the direction of the RCT.

NOTE *The drum may be set aside while the remaining drums in the batch are processed.*

[B] **NOTIFY** the applicable Operations Manager or designee and the TA-54 Operations Center of the tritium concentration, and **REQUEST** the applicable actions.

[17] **ENSURE** that the 55-gal parent drum lid has been removed.

[18] **ENSURE** that the rigid liner lid has been removed.

[19] **REPOSITION** the Plexiglass top from over the parent drum, as necessary.

5. INSTRUCTIONS—LINED SLUDGE DRUM LIQUID REMEDIATION (continued)

[20] **IF** the 55-gal parent drum was opened to remove the rigid liner lid only,
THEN:

WARNING

Failure to operate Jig-Saw in accordance with manufacturer's operating instructions and proper personnel protective equipment can lead to serious injury to the operator.

[A] **CUT** the parent drum rigid liner lid into at least two pieces, and **PLACE** the pieces on top of the waste in a 55-gal parent drum.

[B] **CLOSE** the 55-gal parent drum in accordance with EP-AREAG-WO-DOP-1069.

[C] **GO** to Step 5.[77].

[21] **VISUALLY INSPECT** and **RECORD** the rigid liner condition and ability for rigging the rigid liner on Attachment 1.

[22] **CHECK** (√) YES or NO on Attachment 1 to indicate whether the rigid liner condition allows the rigid liner to be rigged.

[23] **IF** the rigid liner is **NOT** in good condition for rigging,
THEN:

[A] **NOTIFY** supervision of the discrepancy and **REQUEST** the applicable actions.

Supervisor

[B] **NOTIFY** the applicable Operations Manager or designee and the TA-54 Operations Center of the discrepancy.

NOTE 1 *A Quality Assurance (QA) representative may be contacted for assistance with the NCR process.*

NOTE 2 *The NCR may be initiated at an operationally convenient time.*

[C] **ENSURE** that an NCR is initiated in accordance with P330-6, as required.

5. INSTRUCTIONS—LINED SLUDGE DRUM LIQUID REMEDIATION (continued)

WARNING

The vacuum reservoir is to be inspected frequently in order to ensure that ample space is available in the reservoir for liquids and to prevent the spilling of contaminated liquids.

Waste Handling Operator

[24] **IF** significant amounts of liquid exist inside the top of the rigid liner,
THEN:

WARNING

Not securely closing the wet HEPA vacuum could result in a liquid spill and the potential contamination (e.g., radiological or chemical) of personnel and equipment.

[A] **ENSURE** that a new approved waterproof bag (e.g., plastic bag) has been placed in the wet HEPA vacuum with the edge of the bag folded over the edge of the wet HEPA vacuum canister rim, and that the wet HEPA vacuum has been securely CLOSED.

WARNING

Adding too much liquid to the waterproof bag (e.g., plastic bag) in the wet HEPA vacuum could result in all of the liquid not being absorbed or the spilling of the liquid and the potential contamination (e.g., radiological or chemical) of personnel and equipment.

CS

[B] **(*) SUCTION** as much liquid as possible, <u>not</u> to exceed 5 gal, to prevent liquid splashing out of the liner during hoisting. (NCS-CSLA-11-043 and NCS-CSLA-13-049)

5. INSTRUCTIONS—LINED SLUDGE DRUM LIQUID REMEDIATION (continued)

WARNING

Overfilling the wet HEPA vacuum with liquid may result in the liquid spraying out of the wet HEPA vacuum and potentially contaminating (e.g., radiological or chemical) personnel and equipment.

[C] **WHEN** all of the liquid has been removed from the top of the rigid liner, **OR** the waterproof bag (e.g., plastic bag) contains approximately 5 gal, **THEN STOP** the wet HEPA vacuum.

[D] **IF** there is liquid remaining in the waste container, **THEN:**

[a] **CAREFULLY REMOVE** the full waterproof bag (e.g., plastic bag) from the wet HEPA vacuum with the assistance of an RCT, and temporarily seal the full waterproof bag (e.g., plastic bag).

[b] **PLACE** the full waterproof bag (e.g., plastic bag) in a receiving waste container (e.g., 5-gal container).

[c] **GO** to Step 5.[24][A].

[E] **WHEN** all of the liquid has been removed from the top of the rigid liner, **AND DIRECTED** by supervision to remove the liquid from the vacuum, **THEN:**

[a] **CAREFULLY REMOVE** the waterproof bag (e.g., plastic bag) from the vacuum with the assistance of an RCT, and temporarily seal the waterproof bag (e.g., plastic bag).

[b] **PLACE** the waterproof bag (e.g., plastic bag) in a receiving waste container, as necessary (e.g., 5-gal container).

5. INSTRUCTIONS—LINED SLUDGE DRUM LIQUID REMEDIATION (continued)

NOTE The liquid from a single drum is only required to be pH tested once and this pH test result may be used for all liquids from the same drum.

[F] **PERFORM** a pH test on the liquid, and **DOCUMENT** the pH test results on Attachment 1:
- Acid pH is less than 7 (< 7)
- Caustic pH is greater than 7 (> 7)

[G] **NEUTRALIZE** (pH 6 to 8) the liquid, as necessary.

NOTE *The liquid to absorbent ratio is approximately 100 to 1 (e.g., 1 gal of liquid to approximately a quarter cup of absorbent).*

[H] **ADD** a sufficient amount of the absorbent to the liquid in the waterproof bag (e.g., plastic bag) and receiving waste container (e.g., 5-gal pail), as applicable, and **ENSURE** that all of the liquid is absorbed.

[I] **NOTIFY** supervision to obtain direction for further remedial actions.

[25] **DETERMINE** whether the rigid liner contains an internal poly-liner, and **CHECK** (√) YES or NO on Attachment 1.

[26] **IF** the rigid liner contains an internal poly-liner,
THEN OPEN the poly-liner, as necessary.

WARNING

1. **Keep hands away from all cutting edges and moving parts. Failure to comply with the manufacturer's recommendations and proper personnel protective equipment could lead to personal injury.**

2. **Always unplug tool or power source before attaching or removing accessories or making adjustments. Failure to follow manufacturer's recommendations could lead to serious injury due to accidental starting of the equipment.**

[27] **IF** the thickness of the rigid liner edge exceeds the liner puller-rigging device width,
THEN NOTCH rigid liner edge, using a cutting tool.

5. INSTRUCTIONS—LINED SLUDGE DRUM LIQUID REMEDIATION (continued)

[28] **ATTACH** the lifting puller-rigging device to the rigid liner.

[29] **DOCUMENT** the following information for the torque wrenches to be used on Attachment 1:

- M&TE identification number
- Calibration expiration date
- Torque wrenches range specified on the Calibration Certificate
- Tolerance (+/-)

[30] **CHECK** (√) YES or NO on Attachment 1 whether the torque value is within the calibrated range of the torque wrench.

[31] **IF** NO was checked (√),
THEN NOTIFY supervision that the torque value is <u>not</u> within the calibrated range of the torque wrench, and **REQUEST** further direction.

[32] **TORQUE** the rigid liner rigging device fasteners to greater than or equal to 12 ft-lb in order to ensure surfaces are properly clamped to the rigid liner, and **DOCUMENT** the torque value on Attachment 1.

[33] **VISUALLY INSPECT** the lifting device attachment points in order to ensure that the load is evenly distributed and that the rigid liner is properly secured.

WARNING

Failure to properly attach the lifting fixture could result in a loss of load or dropped container.

[34] **IF** the liner puller device is **NOT** fully clamped to the rigid liner,
THEN REQUEST the applicable actions from supervision, and **DOCUMENT** the actions in the Comments section of Attachment 1.

[35] **IF** at any time a container is released during a lifting evolution,
THEN:

[A] **STOP** work.

[B] **NOTIFY** supervision and the TA-54 Operations Center and applicable Operations Manager of the condition, and **REQUEST** the applicable actions.

5. INSTRUCTIONS—LINED SLUDGE DRUM LIQUID REMEDIATION (continued)

[36] **ENSURE** that all personnel are a safe distance away from the load, and **SLOWLY LIFT** the rigid liner approximately 6 in., and **VERIFY** the condition of the attachment points and even distribution of the load.

[37] **IF** the attachment points are **NOT** secure or the load is **NOT** evenly distributed, **THEN:**

[A] **LOWER** the rigid liner to a safe configuration.

[B] **REMOVE** and **ADJUST** the lifting device as necessary.

[C] **ATTACH** the lifting puller-rigging device to the rigid liner.

[D] **GO** to Step 5.[32].

[38] **ENSURE** that the catch basin and pedestal are positioned in the catch basin area.

WARNING

Under no circumstances are personnel allowed to place hands or arms or any portion of the body under the elevated load. Failure to adhere to this warning could lead to serious injury.

[39] **($) SLOWLY RAISE** the rigid liner to a sufficient height (approximately 2 to 4 in. above the 55-gal parent drum) to clear the 55-gal parent drum using the hoist, ensuring that a spotter is present for lifts planned to exceed 4 ft above the ground surface and a critical lift plan is established for lifts planned to exceed 12 ft above the ground surface. (SAC 5.7.8)

[40] **POSITION** the rigid liner over the catch basin area using the hoist and the tagline.

[41] **LOWER** the rigid liner onto the pedestal located inside of the catch basin.

[42] **CLEAN** and **DECONTAMINATE** any spillage from the transfer process.

[43] **WIPE** the exterior of the rigid liner to remove any residual liquids using Kimwipes or equivalent.

5. INSTRUCTIONS—LINED SLUDGE DRUM LIQUID REMEDIATION (continued)

[44] **ENSURE** that all waste and liquid has been removed (e.g., vacuum) from the parent drum, and **SEGREGATE** the waste and liquid for placement into the daughter drum.

[45] **INSTALL** and **SECURE** the lid on the empty 55-gal parent drum.

NOTE *The following step may be performed at a time that is operationally convenient.*

[46] **IF** the rigid liner is **NOT** to be remediated inside of an SWB,
THEN DISPOSITION the empty 55-gal parent drum:

[A] **REMOVE** or **OBLITERATE** the original parent drum identification labels (shorty and All-In-One) and **APPLY** an empty label to the empty 55-gal parent drum.

[B] **ASSIGN** and **PRINT** a LLW identification (ID) number to the empty 55-gal parent drum using the WCATS desktop application (e.g., 412-REMED).

[C] **APPLY** the LLW ID to the empty 55-gal parent drum and **REMOVE** the 55-gal parent drum from the target area.

[D] **DOCUMENT** the requested information on Attachment 5, TA-54 Area G Empty Container Data Sheet.

WARNING

Always unplug tool or power source before attaching or removing accessories or making adjustments. Failure to follow manufacturer's recommendations could lead to serious injury due to accidental starting of the equipment

[47] **ENSURE** that the drill has a drill bit installed through the vacuum pickup head.

5. INSTRUCTIONS—LINED SLUDGE DRUM LIQUID REMEDIATION (continued)

WARNING

Keep hands away from all cutting edges and moving parts. Failure to comply with the manufacturer's recommendations and proper personnel protective equipment could lead to personal injury.

CAUTION

No holes are to be drilled within 12 in. of the top of the liner. All holes that are drilled in the liner SHALL have a minimum 2 in. separation. Failure to comply with this requirement will affect the integrity of the rigid liner for attachment of rigging equipment for hoisting.

NOTE *Steps 5.[48] through 5.[56] may be performed concurrently and repeated as necessary.*

[48] **BREACH** the side of the rigid liner near the bottom of the liner in up to four locations approximately 90° apart using the drill and vacuum pickup head with a maximum 2 in. hole in order to allow liquids that may be present in the bottom of the rigid liner to be removed, as necessary.

WARNING

Vacuum reservoir is to be inspected frequently in order to ensure that ample space is available in the reservoir for liquids and to prevent the spilling of contaminated liquids.

CS [49] **(*) SUCTION** a maximum of 5-gal of liquid from the breach points to remove liquid from the rigid liner. (NCS-CSLA-11-043 and NCS-CSLA-13-049)

5. INSTRUCTIONS—LINED SLUDGE DRUM LIQUID REMEDIATION (continued)

WARNING

Overfilling the wet HEPA vacuum with liquid may result in the liquid spraying out of the wet HEPA vacuum and potentially contaminating (e.g., radiological or chemical) personnel and equipment.

[50] **WHEN** all of the liquid has been removed from the rigid liner,
OR the waterproof bag (e.g., plastic bag) contains approximately 5 gal,
THEN STOP the wet HEPA vacuum.

[51] **IF** there is liquid remaining in the rigid liner,
THEN:

[A] **CAREFULLY REMOVE** the full waterproof bag (e.g., plastic bag) from the wet HEPA vacuum with the assistance of an RCT, and temporarily seal the full waterproof bag (e.g., plastic bag).

[B] **PLACE** the full waterproof bag (e.g., plastic bag) in a receiving waste container (e.g., 5-gal container).

[C] **GO** to Step 5.[49].

[52] **WHEN** all of the liquid has been removed from the rigid liner,
AND DIRECTED by supervision to remove the liquid from the vacuum,
THEN:

[A] **CAREFULLY REMOVE** the waterproof bag (e.g., plastic bag) from the vacuum with the assistance of an RCT, and temporarily seal the waterproof bag (e.g., plastic bag).

[B] **PLACE** the waterproof bag (e.g., plastic bag) in a receiving waste container, as necessary (e.g., 5-gal container).

5. INSTRUCTIONS—LINED SLUDGE DRUM LIQUID REMEDIATION (continued)

[53] **WHEN** the amount of liquid in the vacuum reaches approximately 5 gallons,
OR no more liquid is being removed,
THEN:

[A] **REMOVE** the bag/liner from the vacuum, and **PLACE** the bag/liner in a temporary storage container (i.e., 5-gal bucket) for final disposition in a daughter waste container.

WARNING

Not securely closing the wet HEPA vacuum could result in a liquid spill and the potential contamination (e.g., radiological or chemical) of personnel and equipment.

[B] **ENSURE** that a new approved waterproof bag (e.g., plastic bag) has been placed in the wet HEPA vacuum with the edge of the bag folded over the edge of the wet HEPA vacuum canister rim, and that the wet HEPA vacuum has been securely CLOSED.

[C] **GO** to Step 5.[49].

[54] **PLUG** the holes drilled into the rigid liner, as necessary.

[55] **BREACH** the rigid liner using the drill and vacuum pickup head, and **DRILL** up to eight holes as necessary, no larger than 2 in. in diameter and at least 2 in. apart for liquid removal, using the vacuum cup and drill assembly.

CS [56] **(*) SUCTION** the breach points until no further liquid is observed flowing in the vacuum drain tube or a maximum of 5 gal. (NCS-CSLA-11-043 and NCS-CSLA-13-049)

5. INSTRUCTIONS—LINED SLUDGE DRUM LIQUID REMEDIATION (continued)

WARNING

Overfilling the wet HEPA vacuum with liquid may result in the liquid spraying out of the wet HEPA vacuum and potentially contaminating (e.g., radiological or chemical) personnel and equipment.

[57] **WHEN** all of the liquid has been removed from the rigid liner,
OR the waterproof bag (e.g., plastic bag) contains approximately 5 gal,
THEN STOP the wet HEPA vacuum.

[58] **IF** there is liquid remaining in the rigid liner,
THEN:

[A] **CAREFULLY REMOVE** the full waterproof bag (e.g., plastic bag) from the wet HEPA vacuum with the assistance of an RCT, and temporarily seal the full waterproof bag (e.g., plastic bag).

[B] **PLACE** the full waterproof bag (e.g., plastic bag) in a receiving waste container (e.g., 5-gal container).

[C] **GO** to Step 5.[56].

[59] **WHEN** all of the liquid has been removed from the rigid liner,
AND DIRECTED by supervision to remove the liquid from the vacuum,
THEN:

[A] **CAREFULLY REMOVE** the waterproof bag (e.g., plastic bag) from the vacuum with the assistance of an RCT, and temporarily seal the waterproof bag (e.g., plastic bag).

[B] **PLACE** the waterproof bag (e.g., plastic bag) in a receiving waste container, as necessary (e.g., 5-gal container).

[60] **PLUG** the holes drilled into the rigid liner, as necessary.

[61] **CLEAN** the catch basin as required to collect liquids.

5. INSTRUCTIONS—LINED SLUDGE DRUM LIQUID REMEDIATION (continued)

CS

[62] **(*) IF** the drum has been identified as containing a prohibited item to be remediated, **AND** the sludge drum remediation is being performed in Building 412, **THEN GO** to Section 7, Sludge Drum Prohibited Item Remediation. (NCS-CSLA-13-049)

[63] **STAGE** an empty daughter drum to receive the rigid liner and **RECORD** the daughter drum number on Attachment 1 or **STAGE** the original parent drum.

[64] **TORQUE** the rigid liner device fasteners to at least 12 ft-lb in order to secure the rigid liner, and **DOCUMENT** on Attachment 1.

WARNING

Under no circumstances are personnel allowed to place hands or arms or any portion of the body under the elevated load. Failure to follow this warning could lead to serious injury.

[65] **RAISE** the liner to height for placement into the daughter drum using the hoist.

[66] **POSITION** the rigid liner over the daughter drum using the hoist and the tagline.

[67] **SLOWLY LOWER** the rigid liner into the daughter drum.

[68] **REMOVE** the liner puller-rigging device.

NOTE *The amount of absorbent may vary dependent on the amount of liquid to be absorbed. Placement of absorbent and amount will be authorized by the supervisor.*

[69] **DETERMINE** whether the capacity of the daughter drum can accommodate the vacuum bag/liner and contents, as applicable.

5. INSTRUCTIONS—LINED SLUDGE DRUM LIQUID REMEDIATION (continued)

[70] **IF** the capacity of the daughter drum **CANNOT** accommodate the bag/liners and contents,
THEN:

[A] **OBTAIN** an empty daughter drum prepared in accordance with EP-AREAG-WO-DOP-1069.

[B] **ENSURE** that the secondary daughter drum is labeled with a WCATS ID number.

[C] **RECORD** the secondary daughter drum number on Attachment 1.

[D] **POSITION** a drum liner bag over the edge of the daughter drum.

[E] **ADD** sufficient absorbent to bottom of secondary daughter drum to absorb residual liquids.

NOTE 1 *The liquid from a single drum is only required to be pH tested once and this pH test result may be used to determine the appropriate absorbent for all liquids from the same drum.*

NOTE 2 *The following pH ranges are to be used to select the appropriate absorbent.*

[71] **ENSURE** that a pH test has been performed on the liquid, and **DOCUMENT** the parent 55-gal drum number and the pH test results on Attachment 1:
- Acid pH is less than 7 (< 7)
- Caustic pH is greater than 7 (> 7)

[72] **NEUTRALIZE** (pH 6 to 8) the liquid, as necessary

[73] **ADD** a sufficient amount of the absorbent to absorb/immobilize all liquid contents of the vacuum bags.

[74] **DETERMINE** and **RECORD** the total amount of liquid found on Attachment 1.

[75] **DETERMINE** and **RECORD** the amount of absorbent used on Attachment 1.

5. INSTRUCTIONS—LINED SLUDGE DRUM LIQUID REMEDIATION (continued)

CS

[76] **(*) ENSURE** that the absorbed liquid and any remediated prohibited items are placed inside of a daughter waste container associated with the parent waste container. (NCS-CSLA-11-043 and NCS-CSLA-13-049)

[77] **DECONTAMINATE** all tools and equipment as required by the RCT, and **PLACE** decontamination materials into a daughter waste container.

WARNING

Failure to operate Jig-Saw in accordance with manufacturer's operating instructions and proper personnel protective equipment can lead to serious injury to the operator.

[78] **IF** the rigid liner was **NOT** placed inside of an SWB,
THEN ENSURE that the parent drum rigid liner lid has been cut into at least two pieces and placed the parent drum rigid liner lid in a daughter drum.

[79] **CLOSE** the daughter waste containers in accordance with EP-AREAG-WO-DOP-1069.

NOTE *The following step may be performed out of sequence.*

[80] **ENSURE** that the applicable WCATS desktop remediation task (e.g., 412-REMED) has been completed and the all-in-one labels generated and that the TRU daughter waste containers (e.g., SWB or 55-gal drum) have been labeled in accordance with EP-DIV-DOP-20043.

5. INSTRUCTIONS—LINED SLUDGE DRUM LIQUID REMEDIATION (continued)

NOTE 1 *Individual closed TRU daughter waste containers and the associated absorbed liquid may be removed from the SSSR AREA as the individual TRU daughter waste containers are closed. The TRU daughter waste containers may be removed provided the WCATS remediation task that moves waste into these daughters has been completed with the remaining waste in the parent waste container represented on that task using a Bypass container.*

NOTE 2 *The following step moves the closed TRU daughter waste containers out of the SSSR process area (e.g., contamination control enclosure) while keeping the PE-Ci value of the TRU daughter waste containers as an in-process value [LCO 3.1.1(1)] in the WCATS database.*

[81] **IF** TRU daughter waste containers or empty parent drums are to be moved out of the SSSR process area (e.g., contamination control enclosure),
AND all of the parent waste drums in the batch have **NOT** been remediated,
THEN MOVE the closed TRU daughter waste containers and the associated absorbed liquid out of the SSSR process area (e.g., contamination control enclosure) into the SSSR AREA (Grid X of IN-PROCESS).

Supervision

[82] **($) IF** another parent drum is **NOT** to be remediated,
THEN SECURE the STATIONARY FIRE WATCH, and **DOCUMENT** on Attachment 1. (SAC 5.7.17)

Waste Handling Operator

[83] **IF** another parent drum is to be remediated,
THEN GO to Step 5.[3].

CS

[84] **($) (*) ENSURE** that the WASTE CONTAINER batch and the associated absorbed liquid have been removed from the SSSR process area (e.g., contamination control enclosure) into the SSSR AREA (Grid X of IN-PROCESS), and **CHECK** (√) SAT or UNSAT on Attachment 1. (NCS-CSLA-11-043 and NCS-CSLA-13-049) (SR 4.1.1.2)

6. INSTRUCTIONS—UNLINED SLUDGE DRUM LIQUID REMEDIATION

This section is a stand-alone section and may be performed independently of or in conjunction with other Instruction sections.

NOTE 1 *Radiological surveys may be performed as determined necessary [e.g., by an RP representative (e.g., RCT)] any time during the performance of this procedure.*

NOTE 2 *The applicable WCATS desktop remediation task (e.g., 412-REMED) is performed concurrently with this section.*

Supervisor or designee

[1] **ENSURE** that the prerequisites have been completed.

NOTE *The following step adds the PE-Ci value of the waste drum to the in-process waste container value in the WCATS database and performs SR 4.1.1.1 in order to demonstrate compliance with LCO 3.1.1.(1). The following step is performed before physically moving the waste drum into the SSSR process area (e.g., contamination control enclosure).*

CS [2] **($) (*) ENSURE** that the WCATS INTRA-FACILITY TRANSFER has been completed for moving one waste drum into the SSSR process area (e.g., contamination control enclosure) using a WCATS mobile device or the WCATS desktop application (Grid X of IN-PROCESS). (SR 4.1.1.1, NCS-CSLA-12-003 and NCS-CSLA-13-049)

[3] **($) ESTABLISH** a STATIONARY FIRE WATCH in the SSSR process area (e.g., contamination control enclosure), and **DOCUMENT** on Attachment 2, TA-54 Area G Unlined Sludge Drum Remediation Data Sheet. (SAC 5.7.17)

Waste Handling Operator

CS [4] **(*) VERIFY** that there are no open parent containers in the SSSR process area (e.g., contamination control enclosure), and **CHECK** (√) SAT or UNSAT on Attachment 2. (NCS-CSLA-12-003 and NCS-CSLA-13-049)

NOTE *The following step ensures that the waste drum has been physically moved into the SSSR process area (e.g., contamination control enclosure).*

[5] **MOVE** the TRU WASTE drum to be processed into the SSSR process area (e.g., contamination control enclosure).

6. INSTRUCTIONS—UNLINED SLUDGE DRUM LIQUID REMEDIATION (continued)

[6] **RECORD** the parent drum number on each page of Attachment 2.

[7] **RECORD** the date that the remediation was initiated and the parent drum weight (lb) on Attachment 2.

NOTE *The following two steps may be performed out of sequence when operationally convenient.*

[8] **ENSURE** that the daughter SWB lid has been removed as follows:

[A] **REMOVE** the socket flat head cap screws (SFHCSs) installed in the SWB lid, and **RETAIN** the SFHCSs for re-installation.

[B] **ENSURE** that the appropriate rigging equipment 1/4-20 UNC-2A X .29-in. long swivel hoist ring or two 6 in. x 9 in. magnet assemblies (150 lb capacity for a 1/8 in. thick lid) is attached to the SWB lid.

[C] **IF** a 1/4-20 UNC-2A X .29-in. long swivel hoist ring was installed, **THEN ENSURE** that the 1/4-20 UNC-2A X .29-in. long swivel hoist ring has been torqued to approximately 6 ft-lb (72 in-lb) ensuring that full thread engagement is achieved.

[D] **ATTACH** the gantry crane hook to the 1/4-20 UNC-2A X .29-in. long swivel hoist ring.

[E] **REMOVE** the SWB lid and **PLACE** the SWB lid in a safe location away from the SWB.

NOTE 1 *Drum manipulations may be conducted concurrently with the disposition of the liquid in the following steps.*

NOTE 2 *The amount of absorbent may vary dependent on the amount of liquid to be absorbed. Placement of absorbent and amount will be directed by the supervisor.*

[9] **ENSURE** that a thin layer of absorbent has been added to the bottom of SWB.

6. INSTRUCTIONS—UNLINED SLUDGE DRUM LIQUID REMEDIATION (continued)

WARNING

1. **Hand tools are to be disconnected from the power source before changing accessories and are to be double insulated and inspected before use in order to protect personnel from an unintentional electrical discharge.**

2. **Work activities are to be suspended and the TA-54 Operations Center notified of a drum that is dropped any distance due to slipping off of a lifting fixture (e.g., parrot beak or lifting sling) and the work activity is <u>not</u> to resume until the area is released by the TA-54 Operations Center in order to protect personnel from possible radiological contamination.**

[10] **PLACE** the parent drum in front of the drum hood.

[11] **REMOVE** the parent drum closure ring.

NOTE *The following two steps are performed simultaneously.*

[12] **PARTIALLY LIFT** the parent drum lid.

[13] **OBTAIN** a VOC reading of the parent drum with a MultiRAE or PID Photo vac.

NOTE *The LTP Waste Remediation Safety Evaluation Data Sheet will indicate the presence of tritium inside of a drum.*

[14] **IF** the LTP Waste Remediation Safety Evaluation Data Sheet identified tritium as part of the isotopic breakout for the parent drum,
THEN ENSURE that an RCT monitors for tritium.

[15] **IF** a tritium concentration above the RWP limit is detected,
THEN:

[A] **FOLLOW** the direction of the RCT.

[B] **NOTIFY** the applicable Operations Manager or designee and the TA-54 Operations Center of the tritium concentration, and **REQUEST** the applicable actions.

6. INSTRUCTIONS—UNLINED SLUDGE DRUM LIQUID REMEDIATION (continued)

[16] **RECORD** the parent drum RCRA designation (EPA codes) from Attachment 1 of EP-AREAG-FO-AP-1072 on Attachment 2.

[17] **ENSURE** that the 55-gal parent drum lid has been removed.

NOTE *The liquid removal process using a wet HEPA vacuum and peristaltic pump in the following two steps may be performed concurrently or separately.*

[18] **IF** significant amounts of liquid exist inside the top of the drum,
AND the liquid is to be removed using a wet HEPA vacuum,
THEN:

WARNING

Not securely closing the wet HEPA vacuum could result in a liquid spill and the potential contamination (e.g., radiological or chemical) of personnel and equipment.

[A] **ENSURE** that a new approved waterproof bag (e.g., plastic bag) has been placed in the wet HEPA vacuum with the edge of the bag folded over the edge of the wet HEPA vacuum canister rim, and that the wet HEPA vacuum has been securely CLOSED.

WARNING

Adding too much liquid to the waterproof bag (e.g., plastic bag) could result in all of the liquid not being absorbed or the spilling of the liquid and the potential contamination (e.g., radiological or chemical) of personnel and equipment.

CS

[B] **(*) SUCTION** the top of the drum until no further liquid is observed flowing in the vacuum drain tube or a maximum of 5 gal. (NCS-CSLA-12-003 and NCS-CSLA-13-049)

6. INSTRUCTIONS—UNLINED SLUDGE DRUM LIQUID REMEDIATION (continued)

WARNING

Overfilling the wet HEPA vacuum with liquid may result in the liquid spraying out of the wet HEPA vacuum and potentially contaminating (e.g., radiological or chemical) personnel and equipment.

[C] **WHEN** all of the liquid has been removed from the top of the drum,
OR the waterproof bag (e.g., plastic bag) contains approximately 5 gal,
THEN STOP the wet HEPA vacuum.

[D] **IF** there is liquid remaining on top of the drum,
THEN:

[a] **CAREFULLY REMOVE** the full waterproof bag (e.g., plastic bag) from the wet HEPA vacuum with the assistance of an RCT, and temporarily seal the full waterproof bag (e.g., plastic bag).

[b] **PLACE** the full waterproof bag (e.g., plastic bag) in a receiving waste container (e.g., 5-gal container).

[c] **GO** to Step 6.[18][A].

[E] **WHEN** all of the liquid has been removed from the top of the drum,
AND DIRECTED by supervision to remove the liquid from the vacuum,
THEN:

[a] **CAREFULLY REMOVE** the waterproof bag (e.g., plastic bag) from the vacuum with the assistance of an RCT, and temporarily seal the waterproof bag (e.g., plastic bag).

[b] **PLACE** the waterproof bag (e.g., plastic bag) in a receiving waste container (e.g., 5-gal container).

6. INSTRUCTIONS—UNLINED SLUDGE DRUM LIQUID REMEDIATION (continued)

NOTE The liquid from a single drum is only required to be pH tested once and this pH test result may be used for all liquids from the same drum.

[F] **PERFORM** a pH test on the liquid, and **DOCUMENT** the parent 55-gal drum number and the pH test results on Attachment 2:
- Acid pH is less than 7 (< 7)
- Caustic pH is greater than 7 (> 7)

[G] **NEUTRALIZE** (pH 6 to 8) the liquid, as necessary.

NOTE *The liquid to absorbent ratio is approximately 100 to 1 (e.g., 1 gal of liquid to approximately a quarter cup of absorbent).*

[H] **ADD** a sufficient amount of the absorbent to the liquid in the waterproof bag (e.g., plastic bag) and receiving waste container (e.g., 5-gal pail), as applicable, and **ENSURE** that all of the liquid is absorbed.

[I] **STORE** the wet HEPA vacuum as appropriate.

CS

[J] **(*) ENSURE** that the absorbed liquid is placed inside of a daughter waste container (e.g., SWB or 55-gal drum) associated with the parent drum. (NCS-CSLA-12-003 and NCS-CSLA-13-049)

[K] **NOTIFY** supervision to obtain direction for further remedial actions.

[19] **IF** significant amounts of liquid exist inside the top of the drum,
AND the liquid is to be removed using a peristaltic pump,
THEN:

[A] **POSITION** the peristaltic pump and receiving waste container (e.g. 5-gal pail) such that the tubing reaches from the desired drum to the receiving waste container (e.g., 5-gal pail).

[B] **ENSURE** that the peristaltic pump is placed on a flat-stable surface to prevent the pump from generating excessive vibrations or movement.

[C] **PLACE** the suction end of the tubing into the bottom of the liquid in the waste container.

6. INSTRUCTIONS—UNLINED SLUDGE DRUM LIQUID REMEDIATION (continued)

[D] **ROUTE** the tubing through the peristaltic pump.

WARNING

<u>Not</u> securely attaching the discharge end of the tubing to the receiving waste container or placing the receiving waste container on a flat-stable surface could result in a liquid spill and the potential contamination (e.g., radiological or chemical) of personnel and equipment.

[E] **PLACE** the receiving waste container on a flat-stable surface.

[F] **PLACE** the discharge end of the tubing into the receiving waste container, and **SECURE** the tube to the receiving waste container (e.g., bungee cord).

[G] **ENSURE** that the peristaltic pump power cord is connected to a 110 Vac GFCI power source.

WARNING

Absorbent is to be added to the receiving waste container in order to absorb the free liquid therefore adding too much liquid to the receiving waste container could result in <u>not</u> all of the liquid being absorbed <u>or</u> the spilling of the free liquid and the potential contamination (e.g., radiological or chemical) of personnel and equipment.

[H] **START** the peristaltic pump.

[I] **WHEN** all of the free liquid has been removed from the top of the drum,
OR the receiving waste container has reached the acceptable limit (full),
THEN STOP the peristaltic pump.

[J] **IF** another receiving waste container is needed,
THEN:

[a] **DETERMINE** whether a sufficient amount of absorbent can be added to the liquid removed from the drum in order to absorb all of the liquid without causing the receiving waste container contents to spill out of the receiving waste container.

6. INSTRUCTIONS—UNLINED SLUDGE DRUM LIQUID REMEDIATION (continued)

[b] **IF** a sufficient amount of absorbent **CANNOT** be added to the receiving waste container in order to absorb all of the liquid,
THEN CAREFULLY POUR a portion of the liquid into another receiving waste container (e.g., 5-gal pail).

[c] **CLOSE** the full receiving waste container.

[d] **OBTAIN** another receiving waste container.

[e] **GO TO** Step 6.[19][E].

[K] **WHEN** all of the free liquid has been removed from the drum,
THEN:

[a] **UNPLUG** the peristaltic pump from the power source.

[b] **REMOVE** the tubing from the peristaltic pump.

[c] **STORE** the peristaltic pump as appropriate.

NOTE The liquid from a single drum is only required to be pH tested once and this pH test result may be used for all liquids from the same drum.

[L] **PERFORM** a pH test on the liquid, and **DOCUMENT** the parent 55-gal drum number and the pH test results on Attachment 2:
- Acid pH is less than 7 (< 7)
- Caustic pH is greater than 7 (> 7)

[M] **NEUTRALIZE** (pH 6 to 8) the liquid, as necessary.

NOTE *The liquid to absorbent ratio is approximately 100 to 1 (e.g., 1 gal of liquid to approximately a quarter cup of absorbent).*

[N] **ADD** a sufficient amount of the absorbent to the liquid in the receiving waste container (e.g., 5-gal pail), and **ENSURE** that all of the liquid is absorbed.

6. INSTRUCTIONS—UNLINED SLUDGE DRUM LIQUID REMEDIATION (continued)

CS

[O] **(*) ENSURE** that the absorbed liquid is placed inside of a daughter waste container (e.g., SWB or 55-gal drum) associated with the parent drum. (NCS-CSLA-12-003 and NCS-CSLA-13-049)

[20] **INSTALL** the parent drum lid and closure ring.

NOTE *The torque wrench calibration and information is not required nor is it documented since the entire parent drum is considered waste and the parent drum lid is not being installed per the manufacturer's instructions.*

[21] **TORQUE** the closure ring bolt to approximately 60 ft-lb while tapping around the closure ring with a dead-blow mallet or equivalent.

[22] **TIGHTEN** the jam nut snug against the closure ring unthreaded lug.

[23] **POSITION** the parent 55-gal drum onto the pedestal located inside of the catch basin.

[24] **CLEAN** and **DECONTAMINATE** any spillage from the transfer process.

[25] **WIPE** the exterior of parent 55-gal drum to remove any residual liquids using Kimwipes or equivalent.

WARNING

Always unplug tool or power source before attaching or removing accessories or making adjustments. Failure to follow manufacturer's recommendations could lead to serious injury due to accidental starting of the equipment.

[26] **ENSURE** that the drill has a drill bit installed through the vacuum pickup head.

6. INSTRUCTIONS—UNLINED SLUDGE DRUM LIQUID REMEDIATION (continued)

WARNING

Keep hands away from all cutting edges and moving parts. Failure to comply with the manufacturer's recommendations and proper personnel protective equipment could lead to personal injury.

CAUTION

No holes are to be drilled within 12 in. of the top of the drum. All holes that are drilled in the drum SHALL have a minimum 2 in. separation. Failure to comply with this requirement will affect the integrity of the drum for attachment of rigging equipment for hoisting.

NOTE 1 *The drill locations may be pre-marked on a parent 55-gal drum based on characterization information such as RTR data.*

NOTE 2 *The drum may be breached and the liquid removed from an individual breach point before breaching the drum again.*

[27] **BREACH** the side of the parent 55-gal drum as necessary using the following criteria:

- **BREACH** the side of the parent 55-gal drum near the bottom of the drum in up to four locations approximately 90° apart <u>or</u> at the identified locations using the drill and vacuum pickup head with a maximum 2 in. hole in order to allow liquids that may be present in the drum to be removed, as necessary.
- **BREACH** the drum using the drill and vacuum pickup head, and **DRILL** up to eight additional holes as necessary, no larger than 2 in. in diameter and at least 2 in. apart for liquid removal, using the vacuum cup and drill assembly.

WARNING

Inspect vacuum reservoir frequently to ensure ample space is available in the collection tank for liquids. Failure to inspect vacuum holding tank will cause an overflow of contaminated liquids.

CS

[28] **(*) SUCTION** a maximum of 5-gal of liquid from the breach points or until no further liquid is observed flowing in the vacuum drain tube. (NCS-CSLA-12-003 and NCS-CSLA-13-049)

6. INSTRUCTIONS—UNLINED SLUDGE DRUM LIQUID REMEDIATION (continued)

WARNING

Overfilling the wet HEPA vacuum with liquid may result in the liquid spraying out of the wet HEPA vacuum and potential contaminating (e.g., radiological or chemical) personnel and equipment.

[29] **WHEN** all of the liquid has been removed from the drum,
OR the waterproof bag (e.g., plastic bag) contains approximately 5 gal,
THEN STOP the wet HEPA vacuum.

[30] **IF** there is liquid remaining in the drum,
THEN:

[A] **CAREFULLY REMOVE** the full waterproof bag (e.g., plastic bag) from the wet HEPA vacuum with the assistance of an RCT, and temporarily seal the full waterproof bag (e.g., plastic bag).

[B] **PLACE** the full waterproof bag (e.g., plastic bag) in a receiving waste container (e.g., 5-gal container).

[C] **GO** to Step 6.[28].

[31] **WHEN** all of the liquid has been removed from the drum,
AND DIRECTED by supervision to remove the liquid from the vacuum,
THEN:

[A] **CAREFULLY REMOVE** the waterproof bag (e.g., plastic bag) from the vacuum with the assistance of an RCT, and temporarily seal the waterproof bag (e.g., plastic bag).

[B] **PLACE** the waterproof bag (e.g., plastic bag) in a receiving waste container (e.g., 5-gal container).

[32] **PLUG** the holes drilled into the drum, as necessary.

6. INSTRUCTIONS—UNLINED SLUDGE DRUM LIQUID REMEDIATION (continued)

[33] **CLEAN** the catch basin as required to collect liquids.

CS

[34] **(*) IF** the drum has been identified as containing a prohibited item to be remediated, **AND** the sludge drum remediation is being performed in Building 412, **THEN GO** to Section 7, Sludge Drum Prohibited Item Remediation. (NCS-CSLA-13-049)

NOTE **($)** *A spotter **SHALL** be present for TRU WASTE container lifts planned to exceed 4 ft above the ground surface. If the planned lift will exceed 12 ft from the bottom of the container to the ground, a critical lift plan **SHALL** be used. (SAC 5.7.8)*

[35] **ENSURE** that the parent 55-gal drum has been placed into the SWB.

NOTE 1 *The liquid from a single drum is only required to be pH tested once and this pH test result may be used to determine the appropriate absorbent for all liquids from the same drum.*

NOTE 2 *The following pH ranges are to be used to select the appropriate absorbent.*

[36] **ENSURE** that a pH test has been performed on the liquid removed from the parent drum, and **DOCUMENT** the parent 55-gal drum number and the pH test results on Attachment 2:

- Acid pH is less than 7 (< 7)
- Caustic pH is greater than 7 (> 7)

[37] **NEUTRALIZE** (pH 6 to 8) the liquid, as necessary

[38] **ADD** sufficient absorbent to absorb/immobilize all liquid contents of the vacuum bags.

[39] **PLACE** the vacuum bags into daughter waste containers.

[40] **DETERMINE** and **RECORD** the total amount of liquid removed from the parent 55-gal drum on Attachment 2.

[41] **DETERMINE** and **RECORD** the amount of absorbent used to solidify the liquid from the parent 55-gal drum on Attachment 2.

6. INSTRUCTIONS—UNLINED SLUDGE DRUM LIQUID REMEDIATION (continued)

CS

[42] **ENSURE** that the absorbed liquid and any remediated prohibited items are placed inside of a daughter waste container associated with the parent waste container. (NCS-CSLA-11-043 and NCS-CSLA-13-049)

[43] **DECONTAMINATE** all tools and equipment as required by the RCT, and **PLACE** decontamination materials into daughter waste containers.

[44] **ENSURE** that any secondary wastes have been placed into daughter waste containers.

[45] **CLOSE** the SWB in accordance with EP-AREAG-WO-DOP-1069.

Supervision

[46] **($) IF** another parent drum is **NOT** to be remediated,
THEN SECURE the STATIONARY FIRE WATCH, and **DOCUMENT** on Attachment 2. (SAC 5.7.17)

Waste Handling Operator

[47] **ENSURE** that the SWB is labeled in accordance with EP-DIV-DOP-20043, LTP TRU Waste Container Labeling.

[48] **RECORD** the SWB number on each page of Attachment 2.

CS

[49] **($) (*) ENSURE** that the SWB and associated waste (e.g., secondary waste) have been removed from the SSSR process area (e.g., contamination control enclosure) into the SSSR AREA (Grid X of IN-PROCESS), and **CHECK** (√) SAT or UNSAT on Attachment 2. (NCS-CSLA-12-003 and NCS-CSLA-13-049) (SR 4.1.1.2)

[50] **ENSURE** that the applicable WCATS desktop remediation task (e.g., 412-REMED) has been completed and the all-in-one labels generated and that the TRU daughter waste containers (e.g., SWB or 55-gal drum) have been labeled in accordance with EP-DIV-DOP-20043.

7. INSTRUCTIONS—SLUDGE DRUM PROHIBITED ITEM REMEDIATION

This section is a stand-alone section and may be performed independently of or in conjunction with other Instruction sections.

CS **(*)** Sludge drum prohibited item remediation activities may only be performed within the Building 412 contamination control enclosure. (NCS-CSLA-13-049)

NOTE 1 *Radiological surveys may be performed as determined necessary [e.g., by an RP representative (e.g., RCT)] any time during the performance of this procedure.*

NOTE 2 *The applicable WCATS desktop remediation task (e.g., 412-REMED) is performed concurrently with this section.*

Supervisor or designee

[1] **ENSURE** that the prerequisites have been completed.

Waste Handling Operator

[2] **ENSURE** that the liquid has been removed from the sludge drum in accordance with Section 5, Lined Sludge Drum Liquid Remediation, or Section 6, Unlined Sludge Drum Liquid Remediation.

[3] **IF** a rigid liner is to be remediated within an SWB (e.g. prohibited item in middle of a rigid liner),
OR remediating an unlined sludge drum,
THEN:

[A] **STAGE** an empty daughter SWB to receive the sludge drum/rigid liner.

[B] **ENSURE** that the SWB has been prepared and opened in accordance with EP-AREAG-WO-DOP-1069.

NOTE *The liquid to absorbent ratio is approximately 100 to 1 (e.g., 1 gal of liquid to approximately a quarter cup of absorbent). Placement of absorbent and amount will be directed by the supervisor.*

[C] **ENSURE** that a thin layer of absorbent has been added to the bottom of the SWB.

7. INSTRUCTIONS—SLUDGE DRUM PROHIBITED ITEM REMEDIATION (continued)

[D] **IF** removing a prohibited item from a rigid liner that is **NOT** in a sludge drum, **THEN:**

[a] **TORQUE** the rigid liner device fasteners to at least 12 ft-lb in order to secure the rigid liner and **DOCUMENT** the torque value on Attachment 1.

WARNING

Under no circumstances are personnel allowed to place hands or arms or any portion of the body under the elevated load. Failure to follow this warning could lead to serious injury.

[b] **($) SLOWLY RAISE** the rigid liner, ensuring that a spotter is present for lifts planned to exceed 4 ft above the ground surface and a critical lift plan is established for lifts planned to exceed 12 ft above the ground surface. (SAC 5.7.8)

[c] **POSITION** the rigid liner over the daughter SWB using the hoist and the tagline.

[d] **SLOWLY LOWER** the rigid liner into the daughter SWB.

[e] **REMOVE** the liner puller-rigging device from the rigid liner.

[f] **ENSURE** that all waste and liquid has been removed (e.g., vacuum) from the parent drum, and **PLACE** the waste and absorbed liquid into the daughter SWB.

7. INSTRUCTIONS—SLUDGE DRUM PROHIBITED ITEM REMEDIATION (continued)

[g] **GO** to Step 7.[3][I]

[E] **ATTACH** the drum lift fixture (sling or drum handler as appropriate) between the drum and lifting device.

WARNING

Severe personnel injury or death can occur from placing parts of the body beneath a suspended load. At no time is an individual permitted to place any portion of their body beneath a suspended load.

[F] **($) SLOWLY RAISE** the drum, ensuring that a spotter is present for lifts planned to exceed 4 ft above the ground surface and a critical lift plan is established for lifts planned to exceed 12 ft above the ground surface. (SAC 5.7.8)

[G] **WHEN** the drum is just above the sides of the SWB,
THEN STOP raising the drum.

WARNING

Pinch points exist during drum loading evolutions. Keep hands and fingers clear during drum loading evolutions to prevent injury. Lower the drum back into the SWB before making adjustments to the cinch straps.

[H] **MANEUVER** the drum/SWB as necessary to position the drum into the SWB.

7. INSTRUCTIONS—SLUDGE DRUM PROHIBITED ITEM REMEDIATION (continued)

WARNING

1. **Hand tools and power tools are sharp and may bind resulting in personnel injury or radiological contamination if the PPE is compromised.**

2. **Use of tools may generate sparks increasing the potential of a fire.**

3. **Slow-cutting tools (e.g., nibblers, crimpers, and pipe wheels) are to be used in order to reduce the potential for personnel injury and to allow time for operators to react to abnormal conditions.**

4. **Activities are to be performed using radiological contamination control methods (e.g., localized contamination control enclosure) directed by an RCT in order to prevent the spread of loose radiological contamination and to prevent personnel radiological contamination.**

CS 5. **(*) The HEPA vacuum designated for collecting liquid is <u>not</u> to be used for contamination control in order to reduce the possibility of a criticality incident.**

6. **Flying debris from cutting tools (e.g., nibbling) may occur and personnel are to remain at a safe distance (approximately 10 ft or more) from the cutting activity or wear the appropriate PPE (face and eye protection) to prevent personnel injury.**

NOTE *Unexpected items may be removed from the drum and packaged separately in an appropriate safe storage area at any time during the disassembly process provided that the following conditions are satisfied:*

- *The RCT and IH have evaluated the items and both agree that it can be removed without presenting a safety or radiological contamination control concern.*
- *Supervision reviews information known about the items and grants approval for the items to be removed and placed into a safe storage area.*
- *Upon successful completion of off-normal item mitigation, Waste Handling Operators continue unsheathing activities at the same procedural step where this deviation occurred.*
- CS ***(*)** *If unexpected items are encountered (e.g., shielded, prohibited, or unknown items) during unsheathing of the drum that may have impacted the radiological or hazardous characterization of the drum (e.g., criticality safety or radiological safety), supervision is notified and evaluates the necessity of re-characterization and adjustment of the radionuclide inventory.*

[I] **CUT** the sludge drum/rigid liner as necessary to access the waste and **PLACE** the removed material out of the way.

7. INSTRUCTIONS—SLUDGE DRUM PROHIBITED ITEM REMEDIATION (continued)

[J] **GO** to Step 7.[6].

WARNING

1. **Under no circumstances are personnel allowed to place hands or arms or any portion of the body under the elevated load. Failure to follow this warning could lead to serious injury.**

2. **Not removing the bung from the 55-gal drum lid has a potential to generate an UNVENTED TRU WASTE DRUM.**

[4] **IF** a rigid liner is to be inverted for remediation,
THEN:

[A] **PLACE** an inverted 55-gal drum lid (with a bung removed) and closure ring on a stable surface (e.g., floor or platform).

[B] **PLACE** the rigid liner centered on top of the inverted drum lid.

[C] **PLACE** an inverted 55-gal daughter drum over the rigid liner and **SEAT** the 55-gal drum on the inverted 55-gal drum lid.

[D] **TIGHTEN** the 55-gal drum closure ring bolt ensuring that the closure ring seats around the 55-gal drum lid.

[E] **ROTATE** the 55-gal drum to an upright position as directed by supervision and RCT.

[F] **RECORD** the 55-gal daughter drum number on Attachment 1.

[G] **REMOVE** the 55-gal drum lid.

7. INSTRUCTIONS—SLUDGE DRUM PROHIBITED ITEM REMEDIATION (continued)

WARNING

1. **Hand tools and power tools are sharp and may bind resulting in personnel injury or radiological contamination if the PPE is compromised.**

2. **Slow-cutting tools (e.g., nibblers, crimpers, and pipe wheels) are to be used in order to reduce the potential for personnel injury and to allow time for operators to react to abnormal conditions.**

4. **Activities are to be performed using radiological contamination control methods (e.g., localized contamination control enclosure) directed by an RCT in order to prevent the spread of loose radiological contamination and to prevent personnel radiological contamination.**

CS 5. **(*) The HEPA vacuum designated for collecting liquid is <u>not</u> to be used for contamination control in order to reduce the possibility of a criticality incident.**

6. **Flying debris from cutting tools (e.g., nibbling) may occur and personnel are to remain at a safe distance (approximately 10 ft or more) from the cutting activity or wear the appropriate PPE (face and eye protection) to prevent personnel injury.**

NOTE *Unexpected items may be removed from the drum and packaged separately in an appropriate safe storage area at any time during the disassembly process provided that the following conditions are satisfied:*

- *The RCT and IH have evaluated the items and both agree that it can be removed without presenting a safety or radiological contamination control concern.*
- *Supervision reviews information known about the items and grants approval for the items to be removed and placed into a safe storage area.*
- *Upon successful completion of off-normal item mitigation, Waste Handling Operators continue unsheathing activities at the same procedural step where this deviation occurred.*
- CS ***(*)** *If unexpected items are encountered (e.g., shielded, prohibited, or unknown items) during unsheathing of the drum that may have impacted the radiological or hazardous characterization of the drum (e.g., criticality safety or radiological safety), supervision is notified and evaluates the necessity of re-characterization and adjustment of the radionuclide inventory.*

[5] **CUT** and **REMOVE** the rigid liner as necessary to access the waste.

7. INSTRUCTIONS—SLUDGE DRUM PROHIBITED ITEM REMEDIATION (continued)

NOTE 1 *Steps 7.[6] through 7.[13] may be performed concurrently or out-of-sequence, as necessary, as the various waste items are encountered or removed from the drum.*

CS **NOTE 2** ***(*)*** *Only the contents of a single parent drum may be placed into a daughter drum in order to ensure compliance with criticality safety requirements. (NCS-CSLA-13-049)*

[6] **VISUALLY INSPECT** and **DETERMINE** the contents of drum/rigid liner for hazards associated with removing the waste.

WARNING

Glass sample vials may contain residual granular materials which can generate sparks when subjected to mechanical agitation. To reduce the possibility of breaking a glass sample vial and the generation of sparks, glass sample vials SHALL be handled with care and void volume reduction activities SHALL be performed without excessive force. (EP-DIV-REPORT-09)

NOTE 1 *Do not crush any containers. Deformation of containers or container lids is allowable to aid in lid removal, as necessary, and help verify during RTR examination the container is not sealed.*

NOTE 2 *Package types within the drum that have the qualities presented in the following step pose no potential for hydrogen build-up.*

NOTE 3 *If YES is checked (√) in the following step for any container then that container is not to be remediated because it is a SAC 5.7.12 non-compliant container.*

[7] **($) DETERMINE** whether there are any SAC 5.7.12 non-compliant containers present (i.e., TRU WASTE containers in the drum that do not have the following attributes), and **CHECK** (√) YES or NO on Attachment 1 or 2, as applicable: (SAC 5.7.12)

- Plastic container with any type of lid
- Any container with a plastic lid
- Container without a gasket (e.g., containers with slip lids, paint cans, and other similar containers of any volume)
- Container with a slip-on lid (with or without a gasket)
- Container that does not contain TRU WASTE
- Fiber board containers of any volume

7. INSTRUCTIONS—SLUDGE DRUM PROHIBITED ITEM REMEDIATION (continued)

NOTE *Package types within the drum that have the qualities presented in the following step are considered sealed and are referred to as "SAC 5.7.12 non-compliant containers" within this procedure.*

[8] **($) IF** any containers discovered in the drum are metal or glass with a positive mechanical locking mechanism, such as a metal screw-on lid, or a metal locking, bolted, or snap-on lid,
THEN:

[A] **NOTIFY** supervision of the presence of SAC 5.7.12 non-compliant containers.

NOTE 1 *Vented Collection Containers for gathering SAC 5.7.12 non-compliant containers may be any container which satisfies the requirements as a vented Type 7A container (e.g., 55-gal drum or SWB).*

NOTE 2 *Multiple SAC 5.7.12 non-compliant containers from a single drum may be placed inside of the same vented Collection Container.*

NOTE 3 *SAC 5.7.12 non-compliant containers should not be commingled with other types of TRU WASTE.*

[B] **PLACE** the SAC 5.7.12 non-compliant containers inside of a vented TRU Collection Container (e.g., vented Type 7A TRU daughter drum or other approved container) that is dedicated for such containers.

[C] **PLACE** the lid on the vented TRU Collection Container.

NOTE *Containers that are compliant with SAC 5.7.12 with a volume of less than or equal to 3 liters may be overpacked in an outer container without demonstrating that the container is not sealed. (P930-1 Section 2.1.3)*

Waste Handling Operator

[9] **PLACE** any containers that are compliant with SAC 5.7.12 and have a volume of greater than 3 liters within a certified glovebag OR within an RP SME-approved containment and **REMOVE** tape, lid, cap, stopper or other appropriate method in order to demonstrate through the nondestructive examination (NDE) process that the container is not sealed.

7. INSTRUCTIONS—SLUDGE DRUM PROHIBITED ITEM REMEDIATION (continued)

[10] **DETERMINE** whether there are any containerized liquids, and **CHECK** (√) YES or NO on Attachment 1 or 2, as applicable.

WARNING

(*) Unexpected container contents may represent a criticality safety concern. If unexpected container contents are discovered that potentially affect criticality safety (i.e., radioactive liquid or fissionable material) the CSO and NCSD are to be notified to evaluate the condition.

CS

[11] **(*) IF** a containerized volume of radioactive liquid is discovered that is greater than approximately 5 liters (~1.3 gal),
THEN:

[A] **STOP** the remediation activities and **DOCUMENT** the discrepancy in the Comments section of Attachment 1 or 2, as applicable.

[B] **NOTIFY** the LTP-OCP OM, CSO, and NCSD for the applicable actions.

CS

NOTE 1 ***(*)*** *Only the contents of a single drum may be placed into a daughter waste container in order to ensure compliance with the criticality safety requirements and MAR inventory requirements. (NCS-CSLA-13-049)*

NOTE 2 *Hazardous waste containers with liquids of any amount or configuration that have been solidified (absorbed) are not required to be managed on secondary containment pallets nor are they required to have a FREE LIQUIDS label affixed to the container.*

[12] **IF** containers compliant with SAC 5.7.12 of any volume with liquid are discovered,
OR non-transparent containers compliant with SAC 5.7.12 are discovered,
THEN:

[A] **PLACE** the container into an RP SME-approved localized containment control enclosure or **BAG-IN** the container into a certified glovebag in accordance with EP-AREAG-WO-DOP-1161, TA-54 Area G TRU Waste Glovebag Operations.

[B] **OPEN** the container, and **DETERMINE** whether liquid is present in the container, as necessary.

7. INSTRUCTIONS—SLUDGE DRUM PROHIBITED ITEM REMEDIATION (continued)

[C] **IF** no liquid is present in the container,
THEN:

[a] **BAGOUT** the container in accordance with EP-AREAG-WO-DOP-1161, as necessary.

[b] **GO** to Step 7.[13].

[D] **DOCUMENT** the approximate liquid volume on Attachment 1 or 2, as applicable.

[E] **PERFORM** a pH test on the liquid, and **DOCUMENT** the results on Attachment 1 or 2, as applicable:
- Acid (less than 7)
- Caustic (base) greater than 7

[F] **NEUTRALIZE** the liquid, as necessary.

CAUTION

To eliminate hazards to the glovebag (i.e., table and gloves), use the appropriate absorbing agents and compatible container to absorb the liquids.

[G] **OBTAIN** the appropriate absorbing agent and a compatible container.

[H] **PLACE** the absorbing material in a compatible container.

[I] **TRANSFER** the liquid into the compatible container, as required.

CS

NOTE 1 ***(*)*** *Only the contents of a single drum may be placed into a daughter waste container in order to ensure compliance with the criticality safety requirements and MAR inventory requirements. (NCS-CSLA-13-049)*

[J] **BAGOUT** the container in accordance with EP-AREAG-WO-DOP-1161, as necessary, and **PLACE** the absorbed liquid in the daughter waste containers.

7. INSTRUCTIONS—SLUDGE DRUM PROHIBITED ITEM REMEDIATION (continued)

[13] **IF** the drum contains a potentially pressurized container,
THEN:

[A] **REMOVE** potentially pressurized (e.g., aerosol or sealed container) from the parent drum as directed by supervision and Radiation Protection (RP).

WARNING

Pressurized containers that have been previously punctured and that are inside of a radiological barrier (plastic bag) present a radiological contamination hazard if the radiological barrier is breached.

[B] **IF** there is evidence that the prohibited item has been previously punctured,
THEN:

[a] **ENSURE** that any liquid within the prohibited item is absorbed.

[b] **DISPOSITION** the prohibited items by placing indicators approved by supervision into the holes with the assistance of an RCT, as necessary, and **SECURE** with tape, and **DOCUMENT** the disposition in the Comments section on Attachment 1 or 2, as applicable.

[c] **STAGE** the punctured prohibited items.

[C] **IF** the prohibited items are **NOT** punctured or breached,
THEN:

NOTE 1 *Pressurized cylinders and aerosol cans **SHALL** be placed in separate Prohibited Item Daughter Drums (e.g., one daughter drum for cylinders and a separate daughter drum for aerosol cans).*

CS **NOTE 2** ***(*)*** *Separate Prohibited Item Drums must be used for each parent drum (NCS-CSLA-13-049)*

[a] **OBTAIN** the Prohibited Item Daughter Drum, as required.

[b] **PLACE** the Prohibited Item Daughter Drum in a location as directed by supervision.

7. INSTRUCTIONS—SLUDGE DRUM PROHIBITED ITEM REMEDIATION (continued)

[c] **ENSURE** that the following are recorded or checked (√) on Attachment 3, TA-54 Area G Sludge Prohibited Item Daughter Drum Data Sheet:

- Date created
- Pressurized Container/Aerosol Cans/Other [check (√) one]
- Date Item Added
- Parent Drum Number
- Parent Drum EPA Codes, if applicable
- Parent Drum Accumulation Start Date (hazardous waste container) or Received Date (non-hazardous waste container)
- Item Description (use trade name e.g., WD-40, paint, as applicable)
- Item Shape
- Item Size
- Item Labeling, if applicable or N/A
- Item Weight (lb)

NOTE *Removing the external radiological contamination from the pressurized item removes the MAR from the item and thus eliminates the need to track the PE-Ci value and the FGE value of the item.*

[d] **DECONTAMINATE** (as much as possible) the prohibited item by wiping down with Kimwipes® or equivalent <u>or</u> **CONTAIN** any radiological contamination, as directed by the RCT.

NOTE *Item Identification labels are generated as part of performing the WCATS desktop remediation application.*

[e] **OBTAIN** a container Item Identification label, and **RECORD** Item ID number on Attachment 3.

[f] **PLACE** a preprinted Item ID Number label on the prohibited item.

[g] **PLACE** the prohibited item into the Prohibited Item Daughter Drum.

NOTE *The WMC may be notified at a time that is operationally convenient.*

Supervisor

[h] **NOTIFY** the WMC of items found.

7. INSTRUCTIONS—SLUDGE DRUM PROHIBITED ITEM REMEDIATION (continued)

Waste Handling Operator

[i] **ENSURE** that the Prohibited Item Daughter Drum is labeled with a hazardous waste label and accumulation start date.

NOTE *The hazardous waste label may need to be replaced to ensure that all information is added and legible.*

[j] **ENSURE** that all applicable EPA codes from the associated parent drum are on the hazardous waste label for the Prohibited Item Daughter Drum, as applicable.

[k] **ENSURE** that the Prohibited Item Daughter Drum lid has been placed on the Prohibited Item Daughter Drum.

[14] **IF** the prohibited item collection containers are to be reused,
THEN STAGE the crate disposal container as directed by supervision.

[15] **IF** the prohibited item collection containers are FULL <u>or</u> **NOT** to be reused,
THEN:

[A] **TRANSFER** the prohibited item collection containers to a designated location outside of the SSSR process area (e.g., contamination control enclosure) into the SSSR AREA (Grid X of IN-PROCESS).

[B] **ENSURE** that the prohibited item collection containers have been labeled in accordance with P930-1, LANL Waste Acceptance Criteria.

[16] **IF** a prohibited item was removed from a rigid liner,
AND the rigid liner is **NOT** inside of a waste container (e.g., 55-gal drum or SWB),
THEN GO to Step 5.[63].

[17] **IF** remediating an unlined sludge drum within an SWB,
THEN GO to Step 6.[36].

7. INSTRUCTIONS—SLUDGE DRUM PROHIBITED ITEM REMEDIATION (continued)

[18] **IF** remediating a rigid liner within an SWB,
THEN:

[A] **PLACE** the empty 55-gal parent drum (with lid removed) and drum lid into the SWB.

[B] **GO** to Step 5.[71].

[19] **GO** to Step 5.[69].

8. INSTRUCTIONS—SECURING ENCLOSURE WITH IN-PROCESS WASTE CONTAINER

This section is a stand-alone section and may be performed independently of, or in conjunction with other Instruction sections of this procedure.

This section must be performed any time that an in-process waste drum is to be left unattended inside of the contamination control enclosure for an extended period of time such as at the end of a shift when the in-process waste container is to be left unattended overnight.

NOTE *Radiological surveys may be performed as determined necessary [e.g., by an RP representative (e.g., RCT)] any time during the performance of this procedure.*

Waste Handling Technician

[1] **RECORD** the following information on Attachment 4, TA-54 Area G TRU Drum SSSR Activity Secure Enclosure Data Sheet:

- Date
- Parent drum number
- Daughter drum number

[2] **ENSURE** that <u>one</u> or more (e.g. [A], [B], [C], or [A] and [B]) of the following has been performed, and **DOCUMENT** on Attachment 4:

[A] **($) ENSURE** that all exposed waste material removed from the waste container has been placed into a daughter or the parent waste drum. (SAC 5.7.17)

[B] **($) ENSURE** that all exposed waste material removed from the waste container has been covered by a fire blanket or other fire retardant material. (SAC 5.7.17)

[C] **($) ENSURE** that a STATIONARY FIRE WATCH has been established inside of the SSSR process area (e.g., contamination control enclosure). (SAC 5.7.17)

[3] **ENSURE** that open waste drums have been closed (may be a temporary configuration for a waste container to be reopened).

[4] **ENSURE** that all equipment used to remediate the waste container have been placed in a safe condition (e.g., electrical equipment de-energized and unplugged), as applicable.

8. INSTRUCTIONS—SECURING ENCLOSURE WITH IN-PROCESS WASTE CONTAINER (continued)

[5] **VERIFY** that the following applicable air movers are ON and that the applicable HEPA filter DP reading for each air mover is within the required range, and **DOCUMENT** the results on Attachment 4:

Facility	Air Mover	Required HEPA DP (in. wc)
Dome TA-54-231 PermaCon	AM-01	≥ 0.5 to ≤ 2.5
	AM-02	
	AM-03	
	AM-08	
Building TA-54-412 Enclosure	AM-01	≥ 0.5 to ≤ 3.5
	AM-02	
	AM-03	

[6] **($) VERIFY** that all combustible/flammable liquids are removed from the SSSR AREA or attended, and **DOCUMENT** on Attachment 4. (LCO 3.3.1)

9. POST-PERFORMANCE ACTIVITIES

9.1 Disposition

Operator

[1] **PRINT, SIGN, Z** number and **DATE** on the applicable attachment.

Supervision or designee

[2] **PRINT, SIGN, Z** number and **DATE** on the applicable attachment.

[3] **IF** Section 5 or 6, was performed,
THEN:

SOS or SOM

[A] **REVIEW** the applicable for accuracy and completeness.

[B] **CHECK** (√) YES or NO to indicate whether the applicable acceptance criteria is satisfied on the applicable.

[C] **IF** the applicable acceptance criteria is **NOT** satisfied,
THEN:

[a] **ENSURE** that the applicable TSR actions have been implemented.

[b] **ENSURE** that the actions of EP-DIV-AP-13, EWMO TSR-Related Operational Limits Actions Compliance Tracking, have been implemented.

[c] **ENSURE** that the SOM and EWMO-FOD have been notified of the discrepancy.

[D] **IF** any deficiencies were identified,
THEN INITIATE actions to correct the deficiency [e.g., Facility Service Request (FSR) System], and **DOCUMENT** the actions taken (e.g., FSR Issue Number) in the Comments section of the applicable attachment.

[E] **SIGN** and **DATE/TIME** the applicable attachment.

[F] **ENSURE** that the TA-54 Area G Compliance Requirements Tracking Schedule and status boards, as applicable, are updated in accordance with EP-DIV-AP-20193, EWMO Compliance Requirements Tracking.

9.1 Disposition (continued)

NOTE *Completing a Post-Job Review may be accomplished using the applicable P300 form or online (the preferred method since the institution has access to feedback and lessons learned* http://int.lanl.gov/safety/iwmc/ *[Click on the Submit IWD Part 4 Post-Job Review]).*

[4] **IF** this procedure is categorized as a moderate or high/complex activity and any of the following occur:

- An activity was completed for the first time
- A request was made by anyone involved with the performance of this procedure to perform a post-job review
- An abnormal event occurred
- A revision to an existing procedure was issued and it has been determined by the procedure owner or designee that a Post-Job Review is required

THEN PERFORM a Post-Job Review in accordance with P300.

[5] **IF** the Post-Job Review identified any necessary changes to this procedure, **THEN INITIATE** a revision to this procedure.

9.2 Records Processing

Supervisor or designee

[1] **ENSURE** that documents generated by the performance of this procedure are processed as follows:

Record Identification	Record Type Determination	Protection/Storage Methods	Processing Instructions
Attachment 1, TA-54 Area G Lined Sludge Drum Remediation Data Sheet Attachment 2, TA-54 Area G Unlined Sludge Drum Remediation Data Sheet Attachment 3, TA-54 Area G Sludge Prohibited Item Daughter Drum Data Sheet Attachment 4, TA-54 Area G TRU Drum SSSR Activity Secured Enclosure Data Sheet Attachment 5, TA-54 Area G Empty Container Data Sheet	QA Record	Supervision **SHALL** implement a reasonable level of protection to prevent loss and degradation. Records should be maintained in a one hour fire-rated metal file cabinet when not in use.	When the records are ready for final disposition, the record is transferred to Records Management in accordance with EP-DIR-AP-10003, Records Management Procedure for ADEP Employees.

10. REFERENCES

CCP-AK-LANL-004 (AK4), Waste Stream LA-MIN03-NC.001

DOE/WIPP 02-3122, Transuranic Waste Acceptance Criteria for the Waste Isolation Pilot Plant

DOE/WIPP 11-3384, CBFO Approved Filter Vents

EP-AREAG-FO-AP-1072, TA-54 Area G SSSR AREA TRU MAR Inventory Control

EP-AREAG-FO-DOP-1087, TA-54 Work Release Inspection Sheets

EP-AREAG-FO-AP-1097, TA-54 Area G Combustible/Flammable Liquid Control

EP-AREAG-WO-DOP-0220, TA-54 Area G Building 412 Containment Tent Operator Round Sheet

EP-AREAG-WO-DOP-1069, TA-54 Area G TRU SWB/Drum Operations

EP-AREAG-WO-DOP-1161, TA-54 Area G TRU Waste Glovebag Operations

EP-AREAG-WO-DOP-1162, TA-54 Area G Dome 231 PermaCon Operator Round Sheet

EP-DIR-AP-10003, Records Management Procedure for ADEP Employees

EP-DIV-AP-13, EWMO TSR-Related Operational Limits Actions Compliance Tracking

EP-DIV-AP-0112, EWMO Pre-Job Briefings

EP-DIV-AP-20193, EWMO Compliance Requirements Tracking

EP-DIV-AP-20059, Watchbill Administration

EP-DIV-DOP-20043, LTP TRU Waste Container Labeling

EP-DIV-DOP-20086, EWMO Division Specific Forklift and Drum Handler Equipment Operations

EP-DIV-POLICY-20057, EWMO Health and Safety Policy – Manual Movement

10. REFERENCES (continued)

NCS-CSLA-11-043, Sludge Remediation Nuclear Criticality Safety Limit Approval

NCS-CSLA-12-003, TA-54 Area G Dome 231 PermaCon Drum Sludge Remediation Process, Multiple Parent, SWB Daughter Variations

NCS-CSLA-13-049, TA-54 Area G Building 412 Sludge Remediation

P101-18, Procedure for Pause/Stop Work

P101-4, Forklift and Powered Industrial Trucks

P101-25, Cranes, Hoists, Lifting Devices and Rigging Equipment

P300, Integrated Work Management

P330-6, Nonconformance Reporting

P930-1, LANL Waste Acceptance Criteria

RP-1-DP-65, Radiological Containments

ATTACHMENT 1
Page 1 of 3

TA-54 AREA G LINED SLUDGE DRUM REMEDIATION CHECKLIST

5.[6] Parent Drum No.: _____

4.3[8][A] **($)** Total volume of flammable liquids within the SSSR AREA boundaries for operation and maintenance activities is ≤ 7 gal: [LCO 3.3.1(1a)] ☐ SAT ☐ UNSAT

CS 4.3[8][B] **(*)** Following requirements are satisfied: (NCS-CSLA-11-043 and NCS-CSLA-13-049)

- Drums are 55 gal or larger for remediation ☐ SAT ☐ UNSAT
- Each drum is ≤ 200 FGE ☐ SAT ☐ UNSAT
- Total FGE value of drums to be placed in a daughter SWB is ≤ 325 FGE (Section 6 only) ☐ SAT ☐ UNSAT ☐ N/A

5.[2] **($)** STATIONARY FIRE WATCH established. (SAC 5.7.17) _____/_____
Initials/Z# Date

5.[7] Remediation start date: _____
Parent Drum Weight (lb): _____ lb

5.[8] RCRA designation (EPA Codes): _____

5.[21] Rigid liner condition (e.g., warped, cracked, or breaks): _____
_____
_____

5.[22] Rigid liner can be rigged: ☐ YES ☐ NO

5.[24[F] Liquid (top of drum) pH: _____

5.[25] Rigid liner contains an internal poly-liner: ☐ YES ☐ NO

5.[29] Torque wrench information:
MT&E No: _____
Cal. Expiration Date: _____
Range in ft-lb: _____
Tolerance: _____

ATTACHMENT 1
Page 2 of 3

5.[6] Parent Drum No.: _____

5.[30] Torque value for the torque wrench is within the calibrated range:
☐ YES ☐ NO

5.[32] Lifting device fasteners torque value (≥ 12-ft-lb): _____ ft-lb

5.[64]/7.[3][D][a] Lifting device fasteners torque value (≥ 12-ft-lb): _____ ft-lb

7.[7] **($)** SAC 5.7.12 non-compliant containers are present:
(SAC 5.7.12) ☐ YES ☐ NO ☐ N/A

7.[10] Containerized liquids present: ☐ YES ☐ NO ☐ N/A

7.[12][D]/[E] Containerized liquid: ☐ N/A

Liquid Volume/Unit				
Liquid pH				

5.[63]/7.[4][F] Daughter Drum No.: _____ ☐ N/A

5.[70][C] Secondary daughter drum No.: _____

5.[71] Liquid pH: _____

5.[74] Total amount of liquid found: _____ gal

5.[75] Amount of absorbent used: _____ lb

5.[82] **($)** STATIONARY FIRE WATCH secured. (SAC 5.7.17) ☐ N/A

_____ / _____
Initials/Z# Date

CS 5.[84] **(*)** TRU WASTE CONTAINER batch and associated absorbed liquid removed from the SSSR process area: (NCS-CSLA-11-043 and NCS-CSLA-13-049)
☐ SAT ☐ UNSAT

ATTACHMENT 1
Page 3 of 3

5.[6] Parent Drum No.: _____

Comments: _____

9.1[1] Performed By: _____ / _____ / _____ / _____
Operator (Print) Signature Z # Date

9.1[2] Reviewed By: _____ / _____ / _____ / _____
Supervision (Print) Signature Z # Date

9.1[3][B] Acceptance criteria satisfied: ☐ YES ☐ NO

9.1[3][E] Approved By: _____ / _____ / _____ / _____
SOM or designee (print) Signature Z # Date/Time

ATTACHMENT 2
Page 1 of 2

TA-54 AREA G UNLINED SLUDGE DRUM REMEDIATION DATA SHEET

6.[6] Parent drum No.: _____

6.[48] SWB No.: _____

4.3[8][A] **($)** Total volume of flammable liquids within the SSSR AREA boundaries for operation and maintenance activities is ≤ 7 gal: [LCO 3.3.1(1a)] ☐ SAT ☐ UNSAT

CS 4.3[8][B] **(*)** Following requirements are satisfied: (NCS-CSLA-11-043 and NCS-CSLA-13-049)

- Drums are 55 gal or larger for remediation ☐ SAT ☐ UNSAT
- Each drum is ≤ 200 FGE ☐ SAT ☐ UNSAT
- Total FGE value of drums to be placed in a daughter SWB is ≤ 325 FGE (Section 6 only) ☐ SAT ☐ UNSAT ☐ N/A

CS 4.3[12][B] **(*)** No High-FGE (> 200 FGE) drums staged/stored within 10 ft of the Dome 231/Building 412 SSSR process area: (NCS-CSLA-12-003 and NCS-CSLA-13-049) ☐ SAT ☐ UNSAT

6.[3] **($)** STATIONARY FIRE WATCH established. (SAC 5.7.17) _____/_____
Initials/Z# Date

CS 6.[4] **(*)** No open parent containers in the SSSR process area: (NCS-CSLA-12-003 and NCS-CSLA-13-049) ☐ SAT ☐ UNSAT

6.[7] Remediation start date: _____
Parent Drum Weight (lb): _____ lb

6.[16] RCRA designation (EPA Codes): _____

6.[18][F]/ 6.[19][L] Liquid (top of drum) pH: _____

7.[7] **($)** SAC 5.7.12 non-compliant containers are present: (SAC 5.7.12) ☐ YES ☐ NO ☐ N/A

ATTACHMENT 2
Page 2 of 2

6.[6] Parent drum No.: _____

6.[48] SWB No.: _____

7.[10] Containerized liquids present: ☐ YES ☐ NO ☐ N/A

7.[12][D]/[E] Containerized liquid: ☐ N/A

Liquid Volume/Unit				
Liquid pH				

Parent Drum	Parent Drum #1	Parent Drum #2	Parent Drum #3	Parent Drum #4
Parent 55-gal Drum Number (6.[36])				
Liquid pH (6.[36])				
Volume liquid removed (6.[40])				
Volume absorbent used (6.[41])				

6.[46] **($)** STATIONARY FIRE WATCH secured. (SAC 5.7.17) ☐ N/A

_____ / _____
Initials/Z# Date

CS 6.[49] (*) SWB and associated waste removed from SSSR PROCESS AREA: (NCS-CSLA-12-003 and NCS-CSLA-13-049) ☐ SAT ☐ UNSAT

Comments: _____

9.1[1] Performed By: _____ / _____ / _____ / _____
Operator (Print) Signature Z # Date

9.1[2] Reviewed By: _____ / _____ / _____ / _____
Supervision (Print) Signature Z # Date

9.1[3][B] Acceptance criteria satisfied: ☐ YES ☐ NO

9.1[3][E] Approved By: _____ / _____ / _____ / _____
SOM or designee (print) Signature Z # Date/Time

ATTACHMENT 3
Page 1 of 1

TA-54 AREA G SLUDGE PROHIBITED ITEM DAUGHTER DRUM DATA SHEET

(7.[13][C][c]) ☐ Pressurized Container ☐ Aerosol Cans ☐ Other							Date Created (7.[13][C][c]):	Page: _____ of _____	
Date Item Added (7.[13][C][c])	Item and/or PCB ID No. (7.[13][C][e])	Parent Drum No. (7.[13][C][c])	Parent Drum EPA Code (7.[13][C][c])	Parent Drum Accumulation Start or Received Date (7.[13][C][c])	Item Description (7.[13][C][c])	Item Shape (7.[13][C][c])	Item Size ((7.[13][C][c])	Item Labeling (7.[13][C][c])	Item Weight (lb) (7.[13][C][c])

Comments: _____

_____

_____

9.1[1] Performed By: _____ / _____ / _____ / _____
Operator (Print) Signature Z # Date

9.1[2] Reviewed By: _____ / _____ / _____ / _____
Supervisor/Designee (Print) Signature Z # Date

ATTACHMENT 4
Page 1 of 1

TA-54 AREA G TRU DRUM SSSR ACTIVITY SECURED ENCLOSURE DATA SHEET

8.[1] Date: _____
Parent Drum No.: _____
Daughter Drum No.: _____

8.[2] **($)** One or more of the following conditions exists: (SAC 5.7.17) ☐ YES ☐ NO

- Exposed waste material placed in a daughter or the parent waste drum and drum closed.
- Exposed waste material covered by a fire blanket or other fire retardant material.
- STATIONARY FIRE WATCH established inside of the SSSR process area.

Date/Time (8.[5])	Facility (8.[5])	Air Mover	Required HEPA DP (in. wc)	Air Mover Status (8.[5])	Required HEPA DP (in. wc) (8.[5])
	☐ Dome TA-54-231 PermaCon	AM-01/ AM-02/ AM-03/ AM-08	≥ 0.5 to ≤ 2.5	☐ ON ☐ OFF ☐ N/A	☐ SAT ☐ UNSAT ☐ N/A
				☐ ON ☐ OFF ☐ N/A	☐ SAT ☐ UNSAT ☐ N/A
				☐ ON ☐ OFF ☐ N/A	☐ SAT ☐ UNSAT ☐ N/A
				☐ ON ☐ OFF ☐ N/A	☐ SAT ☐ UNSAT ☐ N/A
	☐ Building TA-54-412 Enclosure	AM-01/ AM-02/ AM-03	≥ 0.5 to ≤ 3.5	☐ ON ☐ OFF ☐ N/A	☐ SAT ☐ UNSAT ☐ N/A
				☐ ON ☐ OFF ☐ N/A	☐ SAT ☐ UNSAT ☐ N/A
				☐ ON ☐ OFF ☐ N/A	☐ SAT ☐ UNSAT ☐ N/A

8.[6] **($)** All combustible/flammable liquids removed from SSSR AREA or attended: (LCO 3.3.1)

_____ / _____ _____ / _____ _____ / _____
Initials / Z# Date Initials / Z# Date Initials / Z# Date
_____ / _____ _____ / _____ _____ / _____
Initials / Z# Date Initials / Z# Date Initials / Z# Date

Comments: _____

9.1[1] Performed By: _____ / _____ / _____ / _____
Operator (Print) Signature Z # Date

9.1[2] Reviewed By: _____ / _____ / _____ / _____
Supervisor/Designee (Print) Signature Z # Date

ATTACHMENT 5
Page 1 of 1

TA-54 AREA G EMPTY CONTAINER DATA SHEET

5.[46][D] Date: _____
Original Container No.: _____
New Container No.: _____

Container Type: ☐ Drum ☐ SWB
Container Size: ☐ 30-gal ☐ 55-gal ☐ 85-gal ☐ 110-gal ☐ N/A

Liner present: ☐ Yes ☐ No

Liquids present: ☐ Yes ☐ No

Lead present: ☐ Yes ☐ No

Container verified empty: ☐ Yes ☐ No

Certified container weight (lb): _____ lb

Calibrated Scale: Cal. File No.: _____
Manufacturer: _____
Model: _____
Last Cal Date: _____
Last Cal Date within 1 yr: ☐ YES ☐ NO

Comments: _____

9.1[1] Performed By: _____ / _____ / _____ / _____
Operator (Print) Signature Z # Date

9.1[2] Reviewed By: _____ / _____ / _____ / _____
Supervisor/Designee (Print) Signature Z # Date

EP-AREAG-WO-DOP-1091, TA-54 Area G TRU Oversized Container SSSR Activities

LAUR-14-24892

TA-54 Area G TRU Oversized Container SSSR Activities

Effective Date: 05/08/14

Hazard Class:	☐	Low	☒	Moderate	☐	High/Complex
Usage Mode:	☐	Reference	☒	UET	☐	Both UET & Reference

The Responsible Manager has determined that the following organizations' review/concurrence is required for the initial document, and for major revisions a same type and level review is required. Review documentation is contained in the Document History File:

Engineering
Quality Assurance
Radiation Protection
Industrial Hygiene and Safety
Subject-Matter Expert
Shift Operations Manager
Environmental Stewardship
Criticality Safety
Fire Protection Engineering
Central Characterization Program

Responsible Manager, LTP-OCP Operations Manager

Name (print)	Z#	Signature	Date
Paul N. Newberry	112056	/s/ Paul Newberry	05/08/14

Classification Review: ☐ N/A ☒ Unclassified ☐ UCNI ☐ Classified _____

Name (print)	Z#	Signature	Date
Art Crawford	080070	/s/ Art Crawford	05/08/14

Working Copy / Information Only (circle one)
Initials / Date: _____/_____

This document fully satisfies the requirements of P300, Integrated Work Management, in order to systematically describe the work activity, the associated hazards, and the controls that **MUST** be employed to mitigate the risks.

REVISION HISTORY

Document Number	Issue Date	Action	Description
EP-AREAG-WO-DOP-0227, R.0	June 15, 2011	New document	
EP-AREAG-WO-DOP-0227, R.1	July 19, 2011	Major Revision	Revise procedure to incorporate MSA comments for the crate remediation process. This revision does not introduce any new hazards.
EP-AREAG-WO-DOP-0227, R.2	July 19, 2011	Major Revision	Current procedure allows for an in-process crate to be present in the contamination control enclosure over several days while being remediated. A new section is being added to clarify the required status of the in-process crate and other waste containers in the contamination control enclosure during the remediation process. Make editorial corrections as necessary. This revision does not introduce any new hazards.
EP-AREAG-WO-DOP-0227, R.3	August 12, 2011	Major Revision	Revise procedure to provide additional options for absorbing liquid discovered inside of a crate. Make editorial corrections as necessary. This revision does not introduce any new hazards.
EP-AREAG-WO-DOP-0227, R.4	August 22, 2011	Minor Revision	Minor Revision adding wording "OR within an RP-1 SME approved containment" to Step 5.[30] Rev bar in left column of affected step. This revision does not introduce any new hazards.
EP-AREAG-WO-DOP-0227, R.5	August 29, 2011	Major Revision	Revise procedure to separate the instructions for a metal or plastic container with a positive mechanical locking mechanism from an unvented waste container. Add specific instructions for disposition of SAC 5.6.4.4 non-compliant containers. Make editorial corrections as necessary. This revision does not introduce any new hazards.
EP-AREAG-WO-DOP-0227, R.6	September 20, 2011	Major Revision	Revise procedure to incorporate the requirements of NCS-CSED-11-155 and the associated CSLA. Make editorial corrections as necessary. This revision does not introduce any new hazards.
EP-AREAG-WO-DOP-0227, R.6 IPC-1	November 7, 2011	IPC	Revise procedure to add Precaution and Limitation for compliance with P101-25 requirements. This revision does not introduce any new hazards. This revision is <u>not</u> safety-basis related.
EP-AREAG-WO-DOP-0227, R.6 IPC-2	November 9, 2011	IPC	Revise procedeure to incorporate the requirements of NCS-CSLA-11-151. Make editorial corrections as necessary. This revision does not introduce any new hazards.
EP-AREAG-WO-DOP-0227, R.6 IPC-3	November 10, 2011	IPC	Revise procedure to add instructions for the inspection and remediation of a daughter waste container. Make editorial corrections as necessary such as changing Pipe Overpack Component (POC) to Pipe Overpack Container (POC) This revision does not introduce any new hazards.

REVISION HISTORY (continued)

Document Number	Issue Date	Action	Description
EP-AREAG-WO-DOP-0227, R.7	Training Only	Major Revision	Revise procedure to permit the processing of waste container with greater than .52 PE-Ci (Hazard Category 3). Incorporate NCS-CSLA-11-151 requirements. Make editorial corrections as necessary. This revision does not introduce any new hazards.
EP-AREAG-WO-DOP-0227, R.8	Training Only	Major Revision	Revise procedure to incorporate MSA issues such as making the entire procedure a UET document, ensuring that liquids are removed from the SSSR Process Area, identifying that only Green designated drums may be processed in the Prerequisite section, and clarifying Appendix 1 (OPS-PRE-3.1, OPS-PRE-3.2, CS-OBS-2.1, OPS-OBS-3.3, OPS-PRE-4.1, and SB-OBS-3.1). Make editorial corrections as necessary. This revision does not introduce any new hazards.
EP-AREAG-WO-DOP-0227, R.8 IPC-1	Training Only	IPC	Correct editorial discrepancies such as step numbering. This revision does not introduce any new hazards.
EP-AREAG-WO-DOP-0227, R.9	Training Only	Major Revision	Revise procedure to incorporate Revision 8 IPC-1 and Revision 6 IPC-1/2/3. The IPCs have already been approved and implemented so revision bars for the IPCs have been omitted. Make editorial corrections as necessary such as adding an explanation note on Attachment 1 providing guidance as to when items in the table may be N/A. This revision does not introduce any new hazards.
EP-AREAG-WO-DOP-0227, R.10	December 22, 2011	Major Revision	Revise procedure to provide guidance for the removal of a new SWB lid. Make editorial corrections as necessary. This revision does not introduce any new hazards.
EP-AREAG-WO-DOP-0227, R.11	January 13, 2012	Major Revision	Revise procedure to incorporate NCS-CSLA-11-174 and incorporate process sequence improvements. Make editorial corrections as necessary. This revision does not introduce any new hazards.
EP-AREAG-WO-DOP-0227, R.11, IPC-1	March 16, 2012	IPC-1	Correct typo in Step 8.[10] changing “9.[7] through 9.[9]” to “8.[7] through 8.[9]” Page 60.
EP-AREAG-WO-DOP-0227, R.12	April 03, 2012	Major Revision	Revise procedure to provide instructions for the remediation of a waste container which failed the characterization process. Make editorial corrections as necessary. This revision does not introduce any new hazards.
EP-AREAG-WO-DOP-0227, R.12 IPC-1	April 9, 2012	Minor IPC	Delete Step 5.[43][B][e], step is a duplicate of the following step (Step 5.[43][B][f]. Delete Note in front of Step 5.[43][C]. Note is for information only and is not required. This revision does not introduce any new hazards.

REVISION HISTORY (continued)

Document Number	Issue Date	Action	Description
EP-AREAG-WO-DOP-0227, R.13	April 25, 2012	Major Revision	Revise procedure to incorporate the requirements of Area G TSR 0.29 changes to the minimum staffing requirements. Make editorial corrections as necessary. This revision does not introduce any new hazards.
EP-AREAG-WO-DOP-0227, R.13 IPC-1	April 27, 2012	Minor IPC	Revise procedure to modify Section 8 in order to accommodate the in-process waste container being an SWB and add additional space on Attachment 6 for recording information. Make editorial corrections as necessary. This revision does not introduce any new hazards.
EP-AREAG-WO-DOP-0227, R.13 IPC-2	May 9, 2012	Major IPC	Revise procedure to allow the remediation of oversized containers (e.g., SWBs) that are not crate daughter waste containers. Make editorial corrections as necessary such as changing the title to allow for parent waste containers other than crates such as SWBs. This revision does not introduce any new hazards.
EP-AREAG-WO-DOP-0227, R.13 IPC-3	October 23, 2012	Major Revision	Revise procedure to incorporate the requiremens of the Area G TSR Page Change 0.32. Incorporate the requirements of NCS-CSLA-12-031. Add a SOM/SOS or designee for the review of comleted SRs. Make editorial corrections as necessary. This revision does not introduce any new hazards.
EP-AREAG-WO-DOP-0227, R.14	October 25, 2012	Major Revision	Revise procedure to include instructions for the remediation of gloveboxes, as necessary. Add guidance for opening metal crates and guidance for absorbing liquids from a non-hazardous waste crate/item. Make editorial corrections as necessary. Incorporate NCS-CSLA-12-031 and PE-Ci limitations associated with a Radiological Facility.
EP-AREAG-FO-DOP-0227, R. 14 IPC-1	November 9, 2012	IPC-1	Revised Steps 4.3[5] has been revised to read as follows: **ENSURE** that the waste container (e.g., crate) to be processed has been moved to the applicable building/structure (e.g., bldg. 412, dome 231) and that any crate has been secured (e.g., nylon banding) to the crate handling equipment (e.g., castors) as necessary. Changes are displayed in the left column (IPC-1)..
EP-AREAG-WO-DOP-0227, R.15	November 20, 2012	Major Revision	Revise procedure to incorporate controls associated with projectiles or impedances that may occur during size reduction activities. Revise POC instructions to allow for the second torque requirement for the pipe component during closing. Delete requirement to NCR waste deficiencies. Make editorial corrections as necessary.

REVISION HISTORY (continued)

Document Number	Issue Date	Action	Description
EP-AREAG-WO-DOP-0227, R.15 IPC-1	December10, 2012	IPC	Revise procedure to correct step numbering. This revision does not affect the purpose, scope, or intent of the approved document. This revision does not introduce any new hazards.
EP-AREAG-WO-DOP-0227, R.15 IPC-2	January 8, 2013	IPC	Revise to update the CSLA reference, and added "or as directed by supervision" to Step 5[27[[D][h]. Additional language was added to Notes regarding crate material from multiple crates, revised to read Debris contained in the vacuum systems for contamination control and crate material from multiple crates may be placed into the a single daughter container (e.g., LB99 or B-25). (NCS-CSLA-13-001). Correct Operations Managers acronym from LTP-OCD to LTP-OCP. This revision does not introduce any new hazards.
EP-AREAG-WO-DOP-0227, R.15 IPC-3	January 11, 2013	IPC	Revise procedure to allow items to remain within a glovebox that is to be size reduced during the size reduction process. Modify Step 8.[7] to accommodate all possible enclosures. This revision does not introduce any new hazards.
EP-AREAG-WO-DOP-0227, R.15 IPC-4	February 14, 2013	IPC	Revise procedure to incorporate HEPA vacuum criticality control in order to prevent mixing the contents of a vacuum used to collect liquid with the contents of any other vacuum. This revision does not introduce any new hazards.
EP-AREAG-WO-DOP-0227, R.16	February 14, 2013	Major Revision	Revise procedure to incorporate the SCO determination process and radiological decontamination of items to obtain an SCO status. Add reference to NCS-CSLA-13-019. Make editorial corrections as necessary.
EP-AREAG-WO-DOP-0227, R.16 IPC-1	February 20, 2013	IPC	Revise procedure to provide instructions for the disposition of SAC 5.6.4.4 non-compliant containers to be processed in accordance with S0:26BJ-494499. Make editorial corrections as necessary.
EP-AREAG-WO-DOP-0227, R.16 IPC-2	February 21, 2013	IPC	Revise procedure to remove the reference to a specific location for process the sealed pencil tanks since they may be remediated in any SSSR Process Area in accordance with SER-TA54 Area G. Change the limitation of spark/flame initiation activities in Step 5.[34][A] from "remediation" to venting in accordance with the requirements of SAC #2 of SER-TA54 Area G. Add a NOTE before Step 5.[343][G] to allow the non-sparking hand tools to be bagged in and out. Make editorial corrections as necessary.
EP-AREAG-WO-DOP-0227, R.17	April 1, 2013	Major Revision	Revise procedure to correct glovebox SCO determination actions. This revision does not introduce any new hazards.
EP-AREAG-WO-DOP-0227, R.18	April 10, 2013	Major Revision	Revise procedure to allow a glovebox that is being remediated to be size reduced without making an SCO determination. Make editorial corrections as necessary. Update Appendix 1. This revision does not introduce any new hazards.

REVISION HISTORY (continued)

Document Number	Issue Date	Action	Description
EP-AREAG-WO-DOP-0227, R.19	April 22, 2013	Major Revision	Revise procedure to allow for the removal of SCO items from an SSSR Process Area as LLW. Revise Hazard Categorization Precaution and Limitation to be specific to activities and not facilities. Make editorial corrections as necessary. Update Appendix 1. This revision does not introduce any new hazards.
EP-AREAG-WO-DOP-0227, R.20	May 4, 2013	Major Revision	Revise procedure to change criticality control for 5 Liter liquid limitation to include all containerized liquid greater than approximately 5 Liters. Delete steps for predetermined liquid criticality controls and allow the remediation of any volume of known liquids per Criticality Safety Engineer. Add (*) to criticality related instructions per P315. Make editorial corrections such as adding conversion from 5 Liters to gallons. This revision does not introduce any new hazards.
EP-AREAG-WO-DOP-0227, R.21	May 14, 2013	Major Revision	Revise procedure to provide a method for identifying fire retardant plastic to address Dome 375 CRA issue. Make editorial corrections as necessary. This revision does not introduce any new hazards.
EP-AREAG-WO-DOP-0227, R.21, IPC-1	May 23, 2013	IPC-1	Revise to add in Building 375 on Step 5.[5] and 4.3[5]. No hazards were introduced during this IPC.
EP-AREAG-WO-DOP-0227, R.21, IPC-2	May 28, 2013	IPC	Change procedure to add the word PermaCon after TA-54-231 in Step 5.[5] and add TA-54-412. This IPC does not introduce any new hazards.
EP-AREAG-WO-DOP-0227. Rev. 21 IPC-3	June 10, 2013	IPC	Change Step 5.[8][C] to allow the use of a lifting device other than a gantry crane such as a forklift.. This IPC does not introduce any new hazards.
EP-AREAG-WO-DOP-0227, R.22	June 13, 2013	Major Revision	Revise procedure to address Criticality Safety comments. Make editorial corrections as necessary. Delete Section 7 and reference EP-AREAG-WO-DOP-1015, TA-54 Area G Pipe Overpack Container Operations. This revision is a total rewrite and revision bars have been omitted. This revision does not introduce any new hazards.
EP-AREAG-WO-DOP-0227, R.22 IPC-1	June 26, 2013	IPC	Revise procedure to allow for additional Comments section space on Attachment 1. This IPC does not introduce any new hazards.
EP-AREAG-WO-DOP-0227, R.22 IPC-2	July 25, 2013	IPC	Revise procedure to correct the SCO process. Delete reference to the Green Security Determination. This IPC does not introduce any new hazards.
EP-AREAG-WO-DOP-0227, R.23	August 15, 2013	Major Revision	Revise procedure to add instructions for documenting the status of LLW/MLLW and for ensuring that waste items to be remediated do not exceed the weight capacity of the equipment being used. Revise procedure to incorporate Revision 0.34 and 0.35 to the Area G TSRs. Delete instructions for classifying TRU Debris as SCO. Make editorial corrections as necessary. This revision does not introduce any new hazards.

REVISION HISTORY (continued)

Document Number	Issue Date	Action	Description
EP-AREAG-WO-DOP-0227, R.24	August 28, 2013	Major Revision	Revise procedure to incorporate steps for the implementation of WCATS. Make editorial corrections as necessary. This revision does not introduce any new hazards.
EP-AREAG-WO-DOP-0227, R.24 IPC-1	August 30, 2013	IPC	Page 107 of 116 Step 5.[75][B] lined through 75 and replaced with 76. Minor editorial.
EP-AREAG-WO-DOP-0227, R.24 IPC-2	September 5, 2013	IPC	Revise procedure to incorporate radiological controls for the remediation of sealed containers such as pencil tanks. Make editorial corrections as necessary. This revision does not introduce any new hazards.
EP-AREAG-WO-DOP-0227, R.25	September 23, 2013	Major Revision	Revise procedure to to incorporate NCS-CSLA-13-055. Make editorial corrections as necessary. This revision does not introduce any new hazards.
EP-AREAG-WO-DOP-1091, R.0	September 30, 2013	Major Revision	Revise procedure to incorporate requirements of ABD-WFM-002 Rev 2.0 Technical Safety Requirements (TSRs) for Technical Area 54, Area G. No new hazards are introduced by this revision. Document number changed; therefore, revision number reverted to zero. Revisions captured under Revision 24, R.24 IPC-1, R.24 IPC-2, and R.25 are not captured under this revision.
EP-AREAG-WO-DOP-1091, R.1	October 3, 2013	Major Revision	Revise procedure to reconcile the Area G BIO 2.0 implemented version of the procedure with the changes made to EP-AREAG-WO-DOP-0227 during the development of the Area G BIO 2.0 version of the procedure. Delete the actions for processing sealed containers with bolted lids/flanges allowed by the Area G TSR 0.35. This revision does not introduce any new hazards. This revision is a total rewrite and revision bars have been omitted.
EP-AREAG-WO-DOP-1091, R.2	December 5, 2013	Major Revision	Revise procedure to incorporate NCS-CSLA-13-069 which supersedes NCS-CSLA-13-055. Add reference to SR 4.1.1 and SR 4.1.2 when moving TRU WASTE (PFITS Issue 2013-3282 Action 1). This revision does not introduce any new hazards.
EP-AREAG-WO-DOP-1091, R.2 IPC-1	December 12, 2013	IPC	Revise procedure to allow for moving closed TRU daughter waste containers from the SSSR process area to either staging or other location outside of the CA but within the SSSR AREA. This revision does not introduce any new hazards.
EP-AREAG-WO-DOP-1091, R.3	January 15, 2014	Major Revision	Revise procedure to incorporate radiological controls for the remediation of metal boxes and for venting the metal box. Make editorial corrections as necessary. This revision does not introduce any new hazards.

REVISION HISTORY (continued)

Document Number	Issue Date	Action	Description
EP-AREAG-WO-DOP-1091, R.4	January 31, 2014	Major Revision	Revise procedure to incorporate process improvements and to make editorial corrections as necessary. Revise procedure to capture the P101-4 and P101-25 requirements for ordinary and critical lifts and distinguish between LANL and subcontractor requirements. Make editorial corrections as necessary. This revision does not introduce any new hazards.
EP-AREAG-WO-DOP-1091, R.5	February 28, 2014	Major Revision	Revise procedure to incorporate instructions for the implementation of the Area G Page Change 2.3 (e.g. change SR 4.1.1 to SR 4.1.1.1). Make editorial corrections as necessary. This revision does not introduce any new hazards.
EP-AREAG-WO-DOP-1091, R.5 IPC-1	February 28, 2014	IPC	Revised to correct and update Steps 7.[6] to add "and associated CRA **OR** are **ATTENDED**," and Steps 5.51.[B][b] added" (i.e., openings) is at the high point of the container, and Steps 5.51[B][h] and 5.[36][H] added additional language from SAC 5.7.18. NOTE 2 before 5.51[B][h] and 5.[36][H] Removed dollar sign and reference to SAC 5.7.18. No additional hazards were identified during this IPC.
EP-AREAG-WO-DOP-1091, R.6	April 14, 2014	Major Revision	Revise procedure to incorporate instructions for the remediation of a non-metal FRP base (bottom). Incorporate NCS-CSLA-14-003 which replaces NCS-CSLA-13-069. Modify SAC 5.7.18 implementation for consistency. Make editorial corrections as necessary. This revision does not introduce any new hazards.
EP-AREAG-WO-DOP-1091, R.7	May 8, 2014	Major Revision	Revise procedure to incorporate the decontamination and Criticality Safety requirements for a Bolas Grande and remove the remediation instructions specific to the CMBs. Delete reference to NCS-CSLA-14-003 as all of the High-FGE containers have been remediated. Make editorial corrections as necessary. This revision is a total rewrite and revision bars have been omitted. This revision does not introduce any new hazards.

TABLE OF CONTENTS

Section Page

TITLE PAGE 1
REVISION HISTORY 2
TABLE OF CONTENTS 9

1. PURPOSE 10

2. SCOPE 10

3. PRECAUTIONS AND LIMITATIONS 11

4. PREREQUISITE ACTIONS 23
4.1 Planning and Coordination 23
4.2 Materials and Equipment 25
4.2.1 Measurement and Test Equipment (M&TE) 25
4.2.2 Special Tools and Equipment 26
4.2.3 Consumables 28
4.3 Field Preparation 29

5. INSTRUCTIONS—OVERSIZED CONTAINER REMEDIATION 33

6. INSTRUCTIONS—LIQUID DISPOSITION 79

7. INSTRUCTIONS—SECURING ENCLOSURE WITH IN-PROCESS WASTE CONTAINER 86

8. INSTRUCTIONS—SWB/DAUGHTER WASTE CONTAINER REMEDIATION 88

9. POST-PERFORMANCE ACTIVITIES 101
9.1 Disposition 101
9.2 Records Processing 103

10. REFERENCES 103

Appendices
Appendix 1, Prohibited Items List 106
Appendix 2, TRU Waste Container Inner Package Confinement Layer Worksheet 107

Attachments
Attachment 1, TA-54 Area G TRU Oversized Container Remediation Data Sheet 108
Attachment 2, TA-54 Area G TRU Oversized Container Prohibited Item Collection Container Data Sheet 117
Attachment 3, TA-54 Area G POC Waste Logsheet 118
Attachment 4, TA-54 Area G SWB/Daughter Waste Container Remediation Data Sheet 119
Attachment 5, LTP LLW/MLLW Container Data Sheet 123

1. PURPOSE

This procedure provides instructions for processing transuranic (TRU) waste from parent Standard Waste Boxes (SWBs), Metal Boxes, Bolas Grande and Fiberglass Reinforced Plywood (FRP) crates and for the disposition of the oversized containers (e.g., crates and parent SWBs). Additionally, this procedure provides instructions for the remediation of daughter waste containers (e.g., SWBs and drums) that were generated from the processing of TRU parent waste containers.

This procedure provides instructions for the sorting, segregating, size reduction, and repackaging (SSSR) activities associated with the waste from oversized waste containers (e.g., crates and parent SWBs) at Technical Area 54 (TA-54).

2. SCOPE

This procedure applies to waste and support-services subcontractor personnel involved with waste container remediation operations within TA-54 Area G.

This procedure does not provide instructions for the remediation of TRU waste from a 55-gal drum except for daughter drums generated from the remediation of a waste container in accordance with this procedure. Parent 55-gal drums are remediated using EP-AREAG-WO-DOP-1086, Sort, Segregate, Size Reduction, and Repackaging Activity.

The remediation of waste containers in accordance with this procedure is limited to those waste containers with an approved LTP Waste Remediation Safety Evaluation Data Sheet (EP-DIV-AP-20098, LTP TRU Waste Remediation Safety Evaluation, Attachment 1).

This procedure is utilized to disassemble oversized containers; process waste items located within waste containers, size reduce waste items, as necessary, and package the removed waste items according to waste-specific waste acceptance criteria (WAC) requirements. Historical research (e.g., photos and radiography) of oversized containers has shown a wide variety of waste item configurations.

This procedure addresses the following activities for the complete processing and disposition of waste material from oversized TRU waste containers, including the waste container:

- Visual Examination (VE) of the waste material
- Prohibited Item Disposition (PID) (see Appendix 1 for list of prohibited items)
- Oversized container disassembly
- Waste material disposition (sorting, segregation, size reduction, and repackaging)
- Liquid disposition
- Pipe Overpack Container (POC) operations
- Securing the enclosure with an in-process waste container
- Remediation of a daughter waste container
- Radiological decontamination of items (e.g., gloveboxes and Bolas Grande) to satisfy Surface Contamination Object (SCO) requirements

2. SCOPE (continued)

This procedure is performed in conjunction with EP-AREAG-FO-AP-1072, TA-54 Area G SSSR Area TRU MAR Inventory Control, in order to ensure that the MAR limits for an SSSR AREA are not exceeded.

This procedure is performed in conjunction with the Waste Compliance and Tracking System (WCATS), in order to populate WCATS with waste container information, to generate Transuranic (TRU) Waste Storage Records (TWSRs), to generate labels, and to associate new daughter waste containers with the parent waste container.

Waste container remediation may be suspended and resumed in accordance with P315, Conduct of Operations, for a waste container remediation that is not completed within a shift or multiple consecutive shifts.

The SSSR AREA boundary is the same as the DEFINED AREA boundary and the SSSR staging area for the SSSR process area (e.g., PermaCon) is within the boundary of the DEFINED AREA.

3. PRECAUTIONS AND LIMITATIONS

- To comply with the intent of the As Low As Reasonably Achievable (ALARA) Program, all personnel **SHALL** apply the principles of time, distance, and shielding when working with radiological materials.

- Personal protective equipment (PPE) **SHALL** be worn as required by the industrial hygiene exposure assessment, applicable Material Safety Data Sheet (MSDS), and Radiological Work Permit (RWP).

- Only a single drum **SHALL** be lifted by a forklift using a drum clamp device.

- Personnel **SHALL** use the appropriate waste container handling equipment, such as leather or mechanic's gloves, when moving waste containers or when removing or applying waste container lids.

- The approximate weight of load should be known before moving and the appropriate capacity lift selected. Be aware of uneven loading and shifts in the load when moving.

- Use proper lifting techniques and buddy system and wear safety shoes when performing heavy lifting or movements in accordance with EP-DIV-POLICY-20057, EWMO Health and Safety Policy – Manual Movement.

3. PRECAUTIONS AND LIMITATIONS (continued)

- At no time is any individual permitted to place any portion of their body under a suspended load.

- During high temperature and humid days, while using respirators and impermeable or multilayered work clothing which limits air movement, or during high-physical exertion individuals must be aware of potential heat stress. It must be noted that poor physical condition, some medicines, and inadequate tolerance for hot workplaces may result in elevated potential to heat stress. In order to reduce the potential of heat stress the following activities should be practiced:
  - Allow sufficient time for proper acclimatization to heat
  - Increase fluid and electrolyte intake before, during, and after work
  - Drink in designated break areas or approved hydration stations during work hours
  - Use an industrial hygiene and safety approved work/rest regimen
  - Recognize the early symptoms of heat stress
  - Consider heat stress when selecting personal protective equipment

- Job-related heat stress varies due to environmental conditions, type of work, metabolic rate, and clothing requirements. When heat stress monitoring is conducted, supervision and the industrial hygiene and safety team **SHALL** assess heat stress hazards and recommend control measures as warranted.

- Activities, items, and containers **SHALL** satisfy approved design specification, regulatory requirements, process-specific parameters, and procedural requirements. Activities, items, or containers that do not conform to the approved specifications and requirements are considered nonconforming and Nonconformance Reports (NCRs) **SHALL** be generated in accordance with P330-6, Nonconformance Reporting, as required.

- When a worker observes an unsafe condition or act that may pose an imminent danger or other safety concern/hazard, the worker has the authority and responsibility to inform the worker engaged in the work and request that the work activity be paused and/or stopped based on the risk posed to the individual, the employees, the environment, or the facility in accordance with P101-18, Procedure for Pause/Stop Work.

- Avoid slips, trips, and falls by wearing the proper footwear with slip-resistant soles and using handrails when using stairs. Use established pathways when available and avoid walking on uneven or unstable surfaces.

3. PRECAUTIONS AND LIMITATIONS (continued)

- Not Applicable (N/A) is documented on the attachments during the performance of this procedure indicating information that is not required to be recorded.

CS
- **(*)** Only the contents of a single parent waste container may be placed into a daughter waste container in order to ensure compliance with MAR inventory and criticality safety requirements. (NCS-CSLA-13-001 and NCS-CSLA-14-016)

CS
- **(*)** Only one parent waste container at a time may be present within an SSSR process area (e.g., PermaCon) that does not have physically separated work areas (e.g., cells). (NCS-CSLA-13-001 and NCS-CSLA-14-016)

CS
- **(*)** The Fissile Gram Equivalent (FGE) value of parent waste container [e.g., Fiberglass Reinforced Plywood crates (FRPs) and SWBs] within an TA-54 Area G SSSR AREA **SHALL** be limited to less than or equal to 325 FGE. (NCS-CSLA-13-001)

CS
- **(*)** The FGE value of a Bolas Grande (3 ft diameter or greater) within an TA-54 Area G SSSR AREA **SHALL** be limited to less than or equal to 100 FGE. (NCS-CSLA-14-016)

CS
- **(*)** Daughter containers and liquid waste may only contain waste from a single Bolas Grande. There are no exceptions for debris contained in a vacuum system used for contamination control or aerosol cans. (NCS-CSLA-14-016)

CS
- **(*)** The FGE value within a daughter 55-gal drum should be limited to less than or equal to 200 FGE and within a daughter SWB should be limited to less than or equal to 325 FGE. The remediation of waste containers in accordance with this procedure does not provide for an FGE measurement of the daughter waste container. The FGE value for these daughter waste containers is a target value that should be planned for through the consideration for the parent waste container FGE content. (NCS-CSLA-13-001 and NCS-CSLA-14-016)

CS
- **(*)** When a parent waste container FGE value is greater than 200 FGE but less than or equal to 325 FGE then any daughter drums **SHALL** be assumed to be a High-FGE drum (greater than 200 FGE) and **SHALL** be handled in accordance with EP-AREAG-WO-DOP-1090, TA-54 Area G High-FGE TRU Waste Container Operations. (NCS-CSLA-13-001)

- Containerized liquid referenced within this document is a liquid inside of a bottle, jar, tank, or similar container and does not apply to free liquids within a oversized containers, drum, or SWB.

3. PRECAUTIONS AND LIMITATIONS (continued)

CS

- **(*)** The HEPA vacuum used to collect liquid from an oversized waste container (e.g., crate) **SHALL** be labeled to indicate that the HEPA vacuum is only for collecting liquid and **SHALL** not be used for any other purpose such as collecting non-liquid material (e.g., sawdust or metal chips) for contamination control. (NCS-CSED-13-019)

CS

- **(*)** Only the liquid waste from a single parent container may be accumulated within a daughter container (e.g., vacuum) and the liquid may not be absorbed or mixed with solid waste (e.g., sawdust or metal shavings). Absorbed liquid may be mixed with solid waste from the same parent container. (NCS-CSLA-13-001)

- Consideration **SHALL** be given to the cutting direction and cut length for size reduction activities in order to prevent possible interferences with the activity.

- When work cannot be accomplished as described in this procedure, or accomplishment of such work would result in an undesirable situation, a condition adverse to quality, or an unacceptable safety risk, the work **SHALL** be stopped and suspended until the appropriate change provisions are implemented. In the event of suspended operations, notify the TRU Operations Manager and TA-54 Operations Center.

- Parent waste containers should be remediated within the shift, if possible. Parent and daughter waste containers may remain open as long as the contents of the containers are being remediated/repackaged (e.g., crates and waste may be partially size reduced or daughter containers are accumulating waste). During planned maintenance evolutions or long, planned Los Alamos National Laboratory (LANL) closures (e.g., winter break) parent and daughter containers will be closed and compliant with the Resource Conservation and Recovery Act (RCRA) Permit storage requirements. If a waste container, its waste, or the daughter container are anticipated to remain open or in process longer than seven days during an unplanned outage, then notify an ENV-ES Deployed Environmental Professional. ENV-ES Deployed Environmental Professional will coordinate with ENV-RCRA for any record keeping or internal/external regulatory notifications requirements. (EP2011-5332)

- Disconnect electrical tools from power source before changing accessories.

- The use of extension cords in the facility should be minimized. When used, the extension cord **SHALL** be rated for the load to be used and the load should be in the OFF position before connecting or removing the extension cord or appliance.

- All critical lift plans executed by LANL personnel **SHALL** be developed using Attachment B, LANL Critical Lift Plan, of P101-25, Cranes, Hoists, Lifting Devices, and Rigging Equipment.

3. PRECAUTIONS AND LIMITATIONS (continued)

- The instructions in this procedure satisfy the P101-25 ordinary lift requirements and the use of LANL Form 1611, Ordinary Lift Procedure, is not required. Not all of the items listed on Form 1611 are captured in this procedure because this procedure is performed using gantry cranes and forklifts in preapproved locations and lifts standard waste containers of a known size and volume.

- Forklift operations are governed by the LANL procedure P101-4, Forklift and Powered Industrial Trucks. P101-4 requires the completion of the applicable sections of a LANL procedure P101-25 Attachment B for critical lifts involving a forklift or powered industrial truck. Forklift operations not involving a critical lift (e.g., load suspended below the forks of the forklift) are not required to comply with the requirements of P101-25.

- Activities such as forklift operations **SHALL** be minimized when operations (e.g., SSSR prohibited item dispositioning) are being performed within a contamination controlled enclosure (e.g., tent) in order to reduce the possibility of the breach of the enclosure and personnel injuries.

- Do not disturb or touch and the TA-54 Operations Center **SHALL** be immediately notified of wild animals, dead animals, nesting areas, droppings, or surfaces with mold growth to avoid exposure to biological threats (e.g., snakes, rodents, rodent droppings, Hanta virus, Bubonic plague, spiders, West Nile virus, molds).

- The most current list of Waste Isolation Pilot Plant (WIPP)-approved filtered vents are listed on DOE/WIPP 11-3384, CBFO Approved Filter Vents.

- This procedure contains special procedure step markings. **($)** is used to identify steps that implement key requirements such as TA-54 Area G Safety Basis requirements. Steps containing **($)** may not be changed without Engineering approval to ensure the requirements are maintained.

- Those steps of the procedure that are the direct implementation of a criticality safety administrative requirement are identified by **(*)** and a circle-CS symbol (CS) to the left of the step. These steps alert the user that the identified step is part of assuring compliance with criticality safety limits. The identified steps are of equal importance to all other steps from a criticality safety perspective.

3. PRECAUTIONS AND LIMITATIONS (continued)

- **($)** Vehicle drivers, forklift operators, and crane operators **SHALL** be trained and maintain applicable LANL qualifications for equipment operations and be able to recognize specific job hazards and associated controls. (AC 5.9)

- **($)** A spotter **SHALL** be present for TRU waste container lifts planned to exceed 4 ft above the ground surface. If the planned lift will exceed 12 ft from the bottom of the container to the ground, a critical lift plan **SHALL** be used. [Specific Administrative Control (SAC) 5.7.8(1) and 5.7.8(2)]

- **($)** A critical lift plan **SHALL** be used for planned lifts of FRPs with MAR greater than 150 PE-Ci. [SAC 5.7.8(3)]

- Containers **SHALL** only be opened inside contamination control enclosures with HEPA-filtered ventilation overseen by a Radiological Control Technician (RCT). During the opening of containers, respirators **SHALL** be worn in accordance with RWP requirements and the removal of materials from containers **SHALL** be limited and controlled.

NOTE *A STATIONARY FIRE WATCH is a person stationed at a specific location with no other assigned duties than the purpose of making fire safety observations, notifying building occupants and the fire department of an emergency, preventing a fire from occurring, and/or extinguishing small fires as trained.*

- **($)** An SSSR AREA **SHALL** satisfy the following applicable minimum Thermal Separation Distance requirement: [Limiting Condition for Operation (LCO) 3.2.1.3]
  - 24 ft with non-METAL CONTAINERS
  - 10 ft with non-METAL CONTAINERS with an established STATIONARY FIRE WATCH
  - 10 ft with METAL CONTAINERS

- The Combustible Restricted Area (CRA) is an area that is around and encloses a DEFINED AREAs where TRANSIENT COMBUSTIBLES and combustible/flammable liquids are strictly controlled to minimize potential of possible fire incidents. The CRA is marked on controlled engineering approved drawings and is approximated by markings in the field. The marking do <u>not</u> have to exactly represent the drawing, but should closely represent the drawing.

3. PRECAUTIONS AND LIMITATIONS (continued)

- **($)** Within the DEFINED AREA and associated CRA boundary, Combustible/Flammable Liquids **SHALL** be controlled in accordance with EP-AREAG-FO-AP-1097, TA-54 Area G Combustibles/Flammables Control. (LCO 3.3.1)

- Plywood boxes and FRP boxes should be segregated into domes that have fire suppression capability. (REPORT-WFM-017)

- **($)** Each SSSR AREA **SHALL** contain less than or equal to 18 PE-Ci EQUIVALENT COMBUSTIBLE WASTE in process and less than or equal to 18 PE-Ci EQUIVALENT COMBUSTIBLE WASTE staged in closed containers. (LCO 3.1.1)

- Support Services Subcontractors executing this procedure **SHALL** comply with the safety and health requirements documented in contractual agreements with the Los Alamos National Laboratory (LANL).

- **($)** A STATIONARY FIRE WATCH **SHALL** be present in the SSSR process area (e.g., PermaCon or containment tent) whenever TRU waste is exposed. He or she **SHALL** have no other assigned duties than making fire safety observations, notifying building occupants and the fire department of an emergency, preventing a fire from occurring, and/or extinguishing small fires as trained. (SAC 5.7.17)

- TRU waste outside of a container is considered exposed. TRU waste covered by a fire blanket or other fire retardant material is sufficiently protected from a potential fire and is not considered exposed.

- Crate material removed during remediation activities (that has not been placed into a waste container), **SHALL** be removed from the contamination control enclosure at the end of each shift or placed into a closed waste container. Additionally, accumulated crate material that has not been placed into a waste container **SHALL** be removed from the contamination control enclosure at approximately the mid-shift in order to prevent the accumulation of excessive quantities of combustible materials.

- Inner waste packages within a TRU waste container should be limited to one layer of confinement, if possible, but **SHALL** not exceed six layers of confinement as defined in CH-TRU Payload Appendices.

3. PRECAUTIONS AND LIMITATIONS (continued)

- **($)** As defined in SAC 5.7.12, a sealed inner TRU waste package contains TRU waste and is a metal or glass container with a positive mechanical locking mechanism or a metal locking, bolted, or snap-on lid. Sealed inner TRU waste packages found within a parent TRU waste container during SSSR activities **SHALL** not be opened except as allowed by SAC 5.7.18. These containers are referred to as "SAC 5.7.12 non-compliant containers" throughout this procedure.

- **($)** The following inner package types may be remediated during SSSR because there is no concern for hydrogen build-up within the package: (SAC 5.7.12)
  - plastic container with any lid
  - any container with a plastic lid
  - any container without a gasket
  - any container with a slip-on lid
  - any container that does not contain TRU waste
  - fiber board containers

- Oversized containers and drum dollies present a rolling hazard which could result in personnel injury due to an oversized container/drum rolling over an individual's foot or due to a collision with a rolling crate/drum. Oversized containers and drum dollies **SHALL** be adequately chocked/locked to prevent movement when the oversized container/drum is not being relocated.

- PPE used during the SSSR process that has been determined to have no detectable radiological contamination using field instrumentation may be considered non-RCRA waste.

- Drill bits and saw blades are sharp and can result in personnel injury or radiological contamination from compromised PPE.

- Plywood can splinter resulting in personnel puncture wounds or may compromise PPE.

- Tool adjustments and blade replacements **SHALL** be performed with the cutting tool deenergized (e.g., battery removed or unplugged) in order to prevent personnel injury from an unintentional activation of the cutting tool.

- Not securing the discharge end of the tubing to the receiving waste container or not placing the receiving waste container on a flat-stable surface could result in a liquid spill and the potential contamination (e.g., radiological or chemical) of personnel and equipment from the liquid.

3. PRECAUTIONS AND LIMITATIONS (continued)

- Personnel working at elevated heights greater than 4 ft **SHALL** be trained to prevent falls in accordance with P101-20, Fall Protection Program.

- Workers **SHALL** maintain a three-point contact with hands and feet while climbing/descending a ladder or while standing on a ladder.

- Workers **SHALL** not over-extend the body to the side when standing on a ladder.

- Workers **SHALL** not hold objects while climbing or descending a ladder.

- When performing a manual lift, personnel **SHALL** use proper lifting techniques, inspect the route, and evaluate the load in order to reduce the possibility of personnel injury.

- Ladders may have sharp edges and create pinch points when being moved or extended/retracted – use cut resistance (e.g., leather or leather palm mechanic) gloves when handling ladders.

- Only trained and authorized employees or employees under the direct supervision of trained personnel may operate a scissor lift.

- Never stand on toe-board, or lean over guard rails of a scissor lift. Use a spotter when line of sight is obstructed, or in tight spaces. Always use a scissor lift on flat, level surfaces. Be aware of overhead hazards when raising the platform. Never place any body part between scissor lift mechanisms. Use of a scissor lift for non-routine activities or in non-routine areas must be reviewed by the EWMO IHS team before performing the activity.

- SCO-I, A solid object on which:
  - The non-fixed contamination on the accessible surface averaged over 300 cm^2 (or the area of the surface if less than 300 cm^2) does not exceed 2.4×10^4 dpm/100 cm^2 (10^{-4} microcurie/cm^2) for beta and gamma and low toxicity alpha emitters, or 2.4×10^3 dpm/100 cm^2 (10^{-5} microcurie/cm^2) for all other alpha emitters;
  - The fixed contamination on the accessible surface averaged over 300 cm^2 (or the area of the surface if less than 300 cm^2) does not exceed 2.4×10^8 dpm/100 cm^2 (1.0 microcurie/cm^2) for beta and gamma and low toxicity alpha emitters, or 2.4×10^7 dpm/100 cm^2 (0.1 microcurie/cm^2) for all other alpha emitters; and
  - The non-fixed contamination plus the fixed contamination on the inaccessible surface averaged over 300 cm^2 (or the area of the surface if less than 300 cm^2) does not exceed 2.4×10^8 dpm/100 cm^2 (1.0 microcurie/cm^2) for beta and gamma and low toxicity alpha emitters, or 2.4×10^7 dpm/100 cm^2 (0.1 microcurie/cm^2) for all other alpha emitters.

3. PRECAUTIONS AND LIMITATIONS (continued)

- SCO-II, A solid object on which the limits for SCO-l are exceeded and on which:
  - The non-fixed contamination on the accessible surface averaged over 300 cm^2 (or the area of the surface if less than 300 cm^2) does not exceed 2.4 x 10^6 dpm/100 cm^2 (10^{-2} microcurie/cm^2) for beta and gamma and low toxicity alpha emitters, or 2.4 x 10^5 dpm/100 cm^2 (10^{-3} microcurie/cm^2) for all other alpha emitters;
  - The fixed contamination on the accessible surface averaged over 300 cm^2 (or the area of the surface if less than 300 cm^2) does not exceed 4.8 x 10^9 dpm/100 cm^2 (20 microcurie/cm^2) for beta and gamma and low toxicity alpha emitters, or 4.8 x 10^8 dpm/100 cm^2 (2 microcurie/cm^2) for all other alpha emitters; and
  - The non-fixed contamination plus the fixed contamination on the inaccessible surface averaged over 300 cm^2 (or the area of the surface if less than 300 cm^2) does not exceed 4.8 x 10^9 dpm/100 cm^2 (20 microcurie/cm^2) for beta and gamma and low toxicity alpha emitters, or 4.8 x 10^8 dpm/100 cm^2 (2 microcurie/cm^2) for all other alpha emitters.

- **($)** When breaching (opening) a SAC 5.7.18 compliant sealed container with bolted lids/flanges the following requirements **SHALL** be satisfied: (SAC 5.7.18)
  - Spark-generating operations in the SSSR AREA **SHALL** cease before loosening the lid/flange bolts.
  - Workers and the sealed container **SHALL** be grounded or bonded before loosening the lid/flange bolts.
  - Loosening the lid/flange bolts **SHALL** be performed using non-sparking processes or tools.
  - The lid/flange bolts of each lid/flange **SHALL** be loosened sufficiently to break the seal on the lid/flange and allow venting without completely removing the bolts.
  - The container **SHALL** be positioned such that the openings are at the high point of the container.
  - Spark-generating operations **SHALL** not be resumed until the container has vented and the hydrogen levels at the openings are measured and demonstrated to be below the LFL (4% for hydrogen).

- Battery operated tools are considered to be spark-producing tools and are to be placed aside, and not handled, when non-sparking tools are required.

- **($)** Restricting the flammable gas concentrations to less than 25% of the lower flammability limit (LFL) for hydrogen accounts for temperature induced fluctuations in the LFL, measurement uncertainty, and provides for an adequate margin of safety to ensure the ignition of flammable gases is prevented. [PD1220 and National Fire Protection Association (NFPA) 55]

3. PRECAUTIONS AND LIMITATIONS (continued)

- ($) LCO 3.1.7 requiring that above-ground TRU waste drums with greater than or equal to 200 PE-Ci be DOUBLEPACKED is not applicable to SSSR activities. (LCO 3.1.7)

- The Class 2 laser scanning head on the WCATS mobile device can cause eye injury if eye is exposed to the beam. Do not allow eyes of user or observers to become exposed to laser beam.

- The WCATS mobile device contains lithium-ion battery. The operating temperature recommendation for the Workabout Pro 3 (WCATS mobile device) is from -4 degrees F to 122 degrees F. Do not store the WCATS mobile device where temperatures are less than -40 °F or greater than 140 °F. Exposure to extreme temperatures (greater than 140 °F) may cause battery to explode. Keep mobile device out of direct sunlight for extended periods of time when not in use. Do not incinerate, mutilate, short circuit, or disassemble the battery pack. Do not dispose of in municipal waste receptacles. Dispose of in properly marked universal waste disposal areas.

- If a physical transfer is postponed or does not take place for any reason after electronic processing in WCATS, then the WCATS task must REVOKED in WCATS to cancel the move in WCATS.

- WCATS is designed to allow any task performed on the WCATS mobile device to be conducted from the WCATS desktop application. This feature provides additional flexibility in the event the WCATS mobile device becomes inoperable or malfunctions or the operator may choose to perform a task using either method.

- Compliance with LCO 3.2.1 and the performance of SR 4.2.1.1 for the minimum thermal separation distance are not verified during the performance of this procedure because of the design of the DEFINED AREAS. All DEFINED AREAS are created specifically for receiving either a METAL CONTAINER or non-METAL CONTAINER and WCATS assures compliance by not authorizing a non-METAL CONTAINER to be moved into a METAL CONTAINER only DEFINED AREA. However, a METAL CONTAINER may be moved into a non-METAL CONTAINER DEFINED AREA because the minimum thermal separation distance requirements of the non-METAL CONTAINER DEFINED AREA are greater than the minimum thermal separation distance requirements of the METAL CONTAINER.

3. PRECAUTIONS AND LIMITATIONS (continued)

- Compliance with LCO 3.1.1 is that each SSSR AREA may contain less than or equal to 18 PE-Ci EQUIVALENT COMBUSTIBLE WASTE in process (open container) and less than or equal to 18 PE-Ci EQUIVALENT COMBUSTIBLE WASTE staged in closed containers. The location of the in-process and closed staged waste containers is not stipulated by the Area G TSR other than within the SSSR AREA and therefore closed in-process daughter containers could coexist with closed staged containers outside of the SSSR process area (lower case process area) such as outside of a PermaCon.

- Spark-producing and non-sparking tools **SHALL** be distinguished from each other. Spark-producing tools are to be set aside, and not handled, when non-sparking tools are required.

- Calibration of the MultiRAE Monitor should be performed if any of the following criteria are satisfied:
  - A field calibration has not been performed within the last 30 days
  - The monitor does not pass a Fresh Air Calibration
  - The monitor does not pass a Bump Check

- The MultiRAE LEL/LFL sensor requires oxygen for combustion and will not provide reliably accurate results in environments that contain less than approximately 10% oxygen.

- Actions that could lead to reactions between ignitable or reactive waste could result in the following and **SHALL** be avoided:
  - Generation of extreme heat, pressure, fire, explosions, or violent reactions
  - Production of uncontrolled toxic mist, fumes, dusts, or gases in sufficient quantities to threaten human health or the environment
  - Production of uncontrolled inflammable fumes or gases in sufficient quantities to pose a risk of fire or explosions
  - Damage to the structural integrity of the container, tank, permitted unit, or other structure associated with the permitted unit
  - A threat to human health or the environment

- Ignitable or reactive wastes **SHALL** be segregated or separated and protected from sources of ignition or reaction such as cutting and welding, frictional heat, sparks, spontaneous ignition, and radiant heat.

4. PREREQUISITE ACTIONS

NOTE 1 *The prerequisite actions may be completed in any order.*

NOTE 2 *Multiple spaces are provided on Attachment 1 for documenting the completion of prerequisite actions in order to accommodate the suspension and resumption of work activities.*

4.1 Planning and Coordination

Supervisor or designee

[1] **ENSURE** that the current revision of this document is available, and **IDENTIFY** this document as Working Copy or Information Only on the Title Page.

[2] **ENSURE** that the performance of this activity is scheduled on the TA-54 Area G facility schedule.

[3] **ENSURE** that an RWP for the planned activity has been issued.

[4] **ENSURE** that a pre-evolution briefing is conducted and documented for all personnel involved in the performance of this procedure, in accordance with EP-DIV-AP-0112, EWMO Pre-Job Briefings, or other approved process.

NOTE *Items that are to be lifted using rigging in accordance with P101-25 require the operations to be performed by an Incidental Operator and Rigger or Qualified Crane Operator and Rigger.*

[5] **ENSURE** that, as a minimum, the following personnel are available for performance of this procedure, as required:

- Radiological Control Technicians (RCTs) as required by RWP
- Two Waste Handling Technicians
- Two Central Characterization Program (CCP) representatives (VE only)
- One supervisor
- **($)** STATIONARY FIRE WATCH [LCO 3.2.1(3) and SAC 5.7.17]

[6] **ENSURE** that a completed LTP Waste Remediation Safety Evaluation Data Sheet (EP-DIV-AP-20098 Attachment 1) has been obtained for each waste container to be processed in accordance with EP-DIV-AP-20098.

4.1 Planning and Coordination (continued)

NOTE *Typically remediation operations within the SSSR AREA will not involve the deliberate generation of sparks or flames and therefore a standing Spark- Or Flame-Producing Operations Permit is not required but instead a Spark- Or Flame-Producing Operations Permit will be generated on a case-by-case basis.*

[7] **IF** the SSSR activity requires the generation of sparks or flames (e.g., grinding, cutting, or burning),
THEN ENSURE that a Spark- Or Flame-Producing Operations Permit (Form 1563) and required signatures have been obtained in accordance with P101-26, Welding, Cutting, and Other Spark-or Flame Producing Operations.

[8] **ENSURE** that the MSDS, manufacturer's instructions, and Integrated Work Document (IWD) are available for radiological decontamination solutions, as necessary.

[9] **IF** processing waste to be certified for disposal to the Nevada National Security Site (NNSS),
THEN ENSURE a NNSS Waste Package Certifier (WPC) is present for inspection and approval of the Low-Level Waste (LLW) destined for NNSS.

[10] **VERIFY** the following with the TA-54 Operations Center:
- DEFINED AREAS involved in the work activities are in the OPERATION MODE.
- Area G is in Staffing Condition 1 (one), as defined in EP-DIV-AP-20059, Watchbill Administration.

[11] **ENSURE** that the TRU daughter waste container labels (e.g., Shorty barcode labels) have been obtained from the Waste Help Team (wastehelp@lanl.gov), as necessary.

4.2 Materials and Equipment

WARNING

Before using any tools or chemicals not listed in this section an evaluation of the items SHALL be performed to determine whether any new hazards are being introduced or new controls are necessary and to determine whether the associated hazard analysis requires updating in order to prevent personnel injury.

NOTE 1 *The list of materials and equipment is not an all inclusive list and additional tools and equipment may be used as necessary.*

NOTE 2 *Torque wrenches are calibrated either as a percentage of full scale or a percentage of indicated value. The torque wrench accuracy information is found on the Calibration Certificate document. Torque wrenches are not calibrated in, nor are they to be used below 20% of their full range.*

4.2.1 Measurement and Test Equipment (M&TE)

Waste Handling Operator

[1] **ENSURE** that the following measuring and test equipment are available, as required:

- Calibrated torque wrench capable of torquing to 120 in-lb
- Calibrated torque wrench capable of torquing 12 to 40 ft-lb
- Calibrated torque wrench capable of torquing to 75 ft-lb
- Calibrated scale capable of weighing 4,000 lb
- Calibrated Dynamometer scale capable of weighing 2,000 lb
- MultiRAE Monitor capable of measuring % LFL/LEL and oxygen
- Ohmmeter (e.g., Multimeter) capable measuring 0 to 1,000 ohms

[2] **IF** an M&TE calibration date has expired,
THEN:

[A] **TAG** the M&TE Out-of-Service.

[B] **NOTIFY** supervision for the applicable actions.

[3] **IF** span gas is to be used,
THEN VERIFY that a 50% LEL Methane Span Gas is available for calibrating and performing a Bump Check of the MultiRAE Monitor.

4.2.1 Measurement and Test Equipment (M&TE) (continued)

[4] **DOCUMENT** the following for the MultiRAE Monitor on Attachment 1, TA-54 Area G TRU Oversized Container Remediation Data Sheet:

- Serial number
- Calibration date
- Accuracy verified through Bump Check within ±10%

4.2.2 Special Tools and Equipment

Waste Handling Operator

[1] **ENSURE** that the following special tools and equipment are available, as required:

- Certified hoisting and rigging equipment
- Certified Crane
- Certified wet/dry vacuum with a high efficiency particulate air (HEPA) filter and attachments
- Certified Local Exhaust Ventilation Unit (to be used as required by the RCT and RWP)
- Elephant trunks
- Hoe
- Dust pan
- Flashlight
- Slow-speed metal size reduction tools (e.g., nibblers, shears, crimpers, and pipe wheel cutters)
- Vice grips or equivalent
- Channel locks or equivalent
- Grinder with grinding wheel or reciprocating saw with metal blade
- Electric hand drill and bits (e.g., hole saw)
- Reciprocating saw and blades
- Dead blow mallet
- Impact wrench
- Tape measure or equivalent
- Prying tool
- Miscellaneous hand tools (e.g., sockets and wrenches)
- 5/16 in. long-arm hex key
- 5/16 in. hex bit socket
- 15/16 in. socket
- 15/16 in. open end or box wrench
- 9/16 in. long-arm hex key
- 9/16 in. hex bit socket

4.2.2 Special Tools and Equipment (continued)

- 9/16 in. socket
- 9/16 in. open end or box wrench
- 1-1/2 in. 6 or 12 point socket for filter installation
- Ratchet drive wrench
- Lineup bar (bull or drift pin) with 3/8” rounded point
- 1/4 in.-20 UNC x 0.29” swivel hoist ring
- Rivet Installation Header Tool (Supplier: Bolhof RIVNUT™. Options C-722 Wrench Type Header, C-900 Model A or C-362 Pneumatic Header)
- 3/4 in. – 13 UNC thread tap
- 1/2 in. – 13 UNC thread tap
- Waste container (e.g., 5-gal pail) for free liquids
- Spill response kit
- Certified containment glovebag
- Rivets (Supplier Bolhof RIVNUT™, Part Number S50-3069)
- 1/2 in.-13 x 1 3/4 in. UNC Socket Flat Head Cap Screws (for SWB lid assembly), Part Number 91263A608
- Jigsaw and blades
- Portaban and blades
- Nibblers
- Grounding/bonding mat/wires
- Prybar or equivalent for separating sealed container lid/flange (non-sparking)
- Fire blankets, Metal X fire extinguishers, and ABC fire extinguishers (STATIONARY FIRE WATCH use)

NOTE *An F130N Self-contained Electro Hydraulic Cutting Tool contains approximately 0.16 gal of hydraulic fluid which has been evaluated for flammability and determined to <u>not</u> require documentation in accordance with EP-AREAG-FO-AP-1072.*

- Hydraulic Shears (e.g., F130N Self-contained Electro Hydraulic cutting Tool or equivalent)
- Peristaltic pump
- Face shield or equivalent
- Heat gun (for Heat Shrink Wrap™)
- WCATS mobile device
- Non-sparking hand drill (hand crank or electric) with a speed selector that has a maximum speed of less than 640 rpm and drill bits
- Non-sparking tools to remove interior plug/vent, flange bolts and nuts

4.2.3 Consumables

Waste Handling Operator

[1] **ENSURE** that the following consumables are available, as required:

- Liner bags approved for use with HEPA vacuum
- Catch pan for HEPA vacuum
- Kimwipes® or equivalent
- Personnel Protective Equipment as required by the applicable MSDS, industrial hygiene assessment, and RWP
- Radiological protection (RP)-approved Tape
- Cut-Resistant Gloves (e.g., leather gloves or HexArmor®)
- Nitrile gloves
- Cutting tool (e.g., utility knife)
- Waterproof vacuum bags to line the wet/dry HEPA vacuum (e.g., plastic bag)
- Decontamination supplies
- Absorbent material (e.g., kitty litter, absorbent pads, etc.)
- Thread-locker (e.g., Loctite® 271 or Loctite® 680)
- Thread sealant (e.g., Loctite® 246)
- Lubricating oil (e.g., WD-40)
- WIPP-approved filtered vent (e.g., NucFil 019 or NucFil 019DS)
- Radioactive labels
- All-in-One labels
- Type 7A 55-gal drums
- Type 7A 55-gal drum lids
- Standard waste boxes (SWB)
- Approved waste disposal request packaging (e.g., Heat Shrink Wrap™)
- Fire-retardant plastic sheeting (e.g., marked with X on end of roll and that has the procurement specification attached <u>or</u> fire-retardant plastic labeled indicating that the plastic is fire-retardant)
- Fixative
- Permanent marker
- Metal pallets
- Packaging material for oversized container pieces (e.g., fire-retardant plastic sheeting and RP-approved tape)
- Type 7A 85-gal drum
- Type 7A 85-gal drum lids
- Oversized container disposal area [e.g., metal crate (e.g., LB99) or metal pallet covered with fire-retardant plastic sheeting]
- B-25, B12, or similar container
- Peristaltic pump tubing

4.2.3 Consumables (continued)

- Radiological decontamination solution (e.g., Fantastik® or Rad-Release I and II)
- Radiological contamination fixative (e.g., InstaCote™ CC Fix)
- Deionized water rinse solution
- Squeegees
- Calibration gas containing 50% LEL methane

4.3 Field Preparation

Supervisor or designee

[1] **ENSURE** that the applicable inspection sheet is completed for the work locations in accordance with EP-AREAG-FO-DOP-1087, TA-54 Work Release Inspection Sheet.

[2] **ENSURE** that the applicable round sheet has been completed:
- EP-AREAG-WO-DOP-0220, TA-54 Area G Building 412 Containment Tent Operator Round Sheet
- EP-AREAG-WO-DOP-1061, TA-54 Area G Dome 375 PermaCon Operator Round Sheet
- EP-AREAG-WO-DOP-1162, TA-54 Area G Dome 231 PermaCon Operator Round Sheet

[3] **IF** new equipment/tools are to be introduced into the SSSR AREA, **THEN ENSURE** that the electrical equipment/tools satisfy the National Electric Code (NEC) or Underwriters Laboratories (UL) requirements (or equivalent) unless ESO approved and **DOCUMENT** initials, Z number, and date on Attachment 1, TA-54 Area G TRU Oversized Container Remediation Data Sheet, or Attachment 4, TA-54 Area G SWB/Daughter Waste Container Remediation Data Sheet, as applicable.

[4] **ENSURE** that the waste container (e.g., crate) to be processed has been moved to the applicable building/structure (e.g., Building 412, Dome 231, or Dome 375) and that any oversized container has been secured (e.g., nylon banding) to the oversized container handling equipment (e.g., castors), as necessary.

4.3 Field Preparation (continued)

[5] **IF** performing SSSR activities in a radiological contamination control tent, **THEN:**

NOTE *In accordance with RP-1-DP-65, Radiological Containments, a containment tent that is in place for greater than 30 days the containment tent **SHALL** be re-inspected by the Fire Protection Engineer at an interval not to exceed 45 days which is documented on the daily inspection checklist*

[A] **ENSURE** that the radiological contamination control tent has been inspected in accordance with RP-1-DP-65.

[B] **ENSURE** that activities outside of the radiological contamination control tent, such as forklift operations, have been minimized.

[6] **($) IF** combustible/flammable liquids are to be brought into an SSSR AREA, **THEN VERIFY** with the TA-54 Operations Center that the combustible/flammable liquids are authorized in accordance with EP-AREAG-FO-AP-1097, and **DOCUMENT** on Attachment 1 or 4, as applicable. (LCO 3.3.1)

[7] **ENSURE** that the waste containers to be moved into the SSSR AREA have been batched in accordance with EP-AREAG-FO-AP-1072, TA-54 Area G SSSR Area TRU MAR Inventory Control, and **DOCUMENT** the following information on Attachment 1 or 4, as applicable:

- Parent waste container unique identifier number (each page of attachment)
- PE-Ci value of waste container
- PE-Ci Equivalent Combustible Waste value of waste container
- Applicable Hazard Category (HC) as a Radiological Activity or HC-2/3 Activity for required facility and associated PE-Ci limits
- Facility (e.g., 231, 375, or 412)

4.3 Field Preparation (continued)

CS

NOTE ***(*)*** *Debris contained in the vacuum systems for contamination control and oversized container material from multiple oversized containers may be placed into a single daughter container (e.g., LB99 or B-25). (NCS-CSLA-13-001)*

[8] **IF** performing Section 5, Oversized Container Remediation,
THEN ENSURE that the oversized container disposal area [e.g., metal crate (e.g., LB99) or metal pallet covered with fire-retardant plastic sheeting] has been prepared <u>or</u> that a previously initiated oversized container disposal container is available, as applicable.

[9] **ENSURE** that Prohibited Item Collection Containers (aerosol and pressurized cylinders) <u>or</u> previously initiated Prohibited Item Collection Containers are available, as necessary.

NOTE *The daughter waste containers (e.g., 55-gal drums and SWBs) may be prepared in advance of the waste container remediation activity and at a location other than the SSSR AREA. As such the lids may be temporarily placed on the daughter waste containers to allow them to be safely transported to the SSSR AREA.*

[10] **ENSURE** that a sufficient number of daughter waste containers (e.g., 55-gal drums or SWBs) are available, as necessary, and have been prepared in accordance with EP-AREAG-WO-DOP-1069, TA-54 Area G TRU SWB/Drum Operations, in order to receive the waste material.

[11] **ENSURE** that the new TRU daughter waste containers have been created in WCATS using the TRU DRUM PREPARATION application and that the Shorty barcode labels have been applied to the new TRU daughter waste containers in accordance with EP-DIV-DOP-20043, LTP TRU Waste Container Labeling.

[12] **ENSURE** that the floor of the SSSR process area (e.g., PermaCon) has been prepared (e.g., fire-retardant plastic sheeting laid down on the floor to collect any dropped items) to receive a waste container.

[13] **IF** the crane or rigging is to be used,
THEN ENSURE that the equipment to be used has a current inspection in accordance with P101-25.

[14] **OBTAIN** the gross weight of the parent oversized container and **RECORD** the Parent Oversized Container Gross Weight on Attachment 1.

4.3 Field Preparation (continued)

[15] **ENSURE** that the waste container (e.g., crate) to be processed has been moved to the applicable SSSR staging area (e.g., Building 412, Dome 231, or Dome 375) and that any oversized container has been secured (e.g., nylon banding) to the oversized container handling equipment (e.g., castors), as necessary.

NOTE *A STATIONARY FIRE WATCH is a person stationed at a specific location with no other assigned duties than the purpose of making fire safety observations, notifying building occupants and the fire department of an emergency, preventing a fire from occurring, and/or extinguishing small fires as trained.*

[16] **($) ENSURE** that a STATIONARY FIRE WATCH is present within the SSSR process area, and **DOCUMENT** on Attachment 1 or 4, as applicable. (SAC 5.7.17)

Electrician or designee

[17] **IF** processing a sealed container with a bolted lid/flange,
THEN:

[A] **DOCUMENT** the following for the Ohmmeter on Attachment 1:
- M&TE identification number
- Calibration expiration date
- Ohmmeter range specified on the Users Manual
- Accuracy (±)

[B] **CHECK** (√) YES or NO on Attachment 1 to indicate whether the resistance value to be measured is within the calibrated range of the Ohmmeter.

[C] **IF** NO was checked (√) in the previous step,
THEN NOTIFY supervision that the resistance value to be measured is <u>not</u> within the range of the Ohmmeter and **REQUEST** further direction.

[D] **MEASURE** the resistance of the bonding wires, and **RECORD** the bonding wire resistances on Attachment 1.

[E] **($) DETERMINE** whether the resistance values are less than or equal to 5 ohms, **AND CHECK** (√) SAT or UNSAT and **RECORD** personnel information on Attachment 1.

[F] **IF** the resistance of a bonding wire is greater than 5 ohms,
THEN NOTIFY supervision of the discrepancy and **REQUEST** further direction.

[G] **ENSURE** that sampling atmosphere for the MultiRAE Monitor is within the design of sampling monitor (i.e., no vehicle/forklift exhaust).

5. INSTRUCTIONS—OVERSIZED CONTAINER REMEDIATION

This section is a stand-alone section and may be performed independently of, or in conjunction with other Instructions sections.

NOTE 1 *While performing the following steps significant findings or deviations from the anticipated waste and its condition may dictate pausing the work activity.*

NOTE 2 *Environmental Professional is to be notified of any oversized container that has not been completely remediated by the end of the seventh day of remediation.*

NOTE 3 *Radiological surveys may be performed as determined necessary [e.g., by an RP representative (e.g., RCT)] any time during the performance of this procedure.*

NOTE 4 *The applicable WCATS desktop remediation task (e.g., 412-REMED) is performed concurrently with this section.*

Waste Handling Operator

[1] **ENSURE** that the prerequisite actions have been completed.

[2] **ENSURE** that radiological surveys on personnel, waste (e.g., oversized container material and individual waste items) within or being removed from the size-reduced oversized container, and tooling are performed as necessary during the oversized container disassembly evolution.

[3] **IF** radiological contamination is detected during the evolution,
THEN FOLLOW the direction of the RCT and the RWP.

NOTE *The following step may be repeated as necessary during the oversized container remediation process until all of the oversized container contents and the oversized container material have been remediated and may be performed out of sequence (e.g., after moving oversized container into the SSSR process area).*

[4] **ENSURE** that the TRU daughter waste containers (e.g., 55-gal drums and SWBs) have been moved into the SSSR process area (e.g., PermaCon).

5. INSTRUCTIONS—OVERSIZED CONTAINER REMEDIATION (continued)

NOTE *The following step adds the PE-Ci value of the waste drums to the in-process waste container value in the WCATS database and performs SR 4.1.1.1 in order to demonstrate compliance with LCO 3.1.1.(1). The following step is performed before physically moving the waste drums into the SSSR process area (e.g., PermaCon).*

[5] **($) IF** moving a TRU oversized container into the Dome TA-54-231 PermaCon, TA-54-375 PermaCon, or TA-54-412 contamination enclosure (tent),
THEN ENSURE that the WCATS INTRA-FACILITY TRANSFER has been completed using a WCATS mobile device or WCATS desktop application. (SR 4.1.1.1)

CS [6] **(*) VERIFY** that there are no parent or daughter waste containers nor are there any shavings or chips from a size reduction (e.g., HEPA vacuum contents) of pencil tanks from waste containers 3440, 92554, 92353, or 68109 within the SSSR process area (e.g., PermaCon). (NCS-CSLA-13-001 and NCS-CSLA-14-016)

NOTE *The following step ensures that the waste drums have been physically moved into the SSSR process area (e.g., PermaCon).*

[7] **MOVE** the TRU oversized container to be processed into the SSSR process area (e.g., PermaCon), and **RECORD** the following on Attachment 1, TA-54 Area G Oversized Container Remediation Data Sheet:
- Date that the oversized container remediation was initiated
- Approximate time that the oversized container remediation was initiated

[8] **CHOCK/LOCK** oversized container and drum dollies moved into the SSSR process area (e.g., PermaCon).

NOTE *The following step may be performed out of sequence (e.g., after moving oversized container into the SSSR process area).*

[9] **REMOVE** the daughter SWB lid as follows:

[A] **REMOVE** the socket flat head cap screws (SFHCSs) from the SWB lid, and **RETAIN** the SFHCSs for re-installation.

5. INSTRUCTIONS—OVERSIZED CONTAINER REMEDIATION (continued)

[B] **ENSURE** that the 1/4-20 UNC-2A X .29-in. long swivel hoist ring is attached to the SWB lid and torqued to 6 ft-lb (72 in-lb) ensuring that full thread engagement is achieved or two 6 in. x 9 in. magnetic assemblies (150 lb capacity for a 1/8 in. thick lid) is attached to the SWB lid.

[C] **ATTACH** the lifting device (e.g., electric forklift spreader bar or gantry crane hook to the 1/4-20 UNC-2A X .29-in. long swivel hoist ring or the magnetic assemblies sling.

[D] **REMOVE** the SWB lid and **PLACE** the SWB lid in a safe location away from the SWB.

[10] **ENSURE** that negative ventilation (e.g., localized ventilation units and elephant trunks) has been established as close to the work area, as possible, as directed by an RCT and the RWP.

[11] **IF** the oversized container is a metal container,
THEN:

[A] **ACCESS** the waste using craft knowledge and RCT assistance.

[B] **ESTABLISH** radiological controls (e.g., negative ventilation or containment) as directed by RP.

[C] **GO** to Step 5.[26].

[12] **ENSURE** that the sawdust collection system is initiated.

5. INSTRUCTIONS—OVERSIZED CONTAINER REMEDIATION (continued)

WARNING

1. **As the oversized container is cut the loose oversized container pieces may fall or present a pinching hazard resulting in personnel injury.**

2. **Control cut rate or forward pressure of power tools to avoid binding the electric motor in order to prevent personnel injury.**

3. **Avoid cutting nails or other fasteners, if possible, in order to prevent the generation of sparks and the possibility of a kickback or binding of the electric tool in order to prevent personnel injury.**

NOTE 1 *The initial oversized container cuts should be large enough to allow access for performing internal radiological surveys but yet small enough to permit the patching of the opening in the event of high radiological levels as determined by an RCT and the RWP.*

NOTE 2 *Initial oversized container cuts should produce oversized container material sized to fit into the final disposal container in order to reduce the number of oversized container material cuts.*

[13] **CUT** a maximum 8 in. diameter hole using the appropriate tool (e.g., a hole saw) in the designated oversized container.

[14] **ENSURE** that a radiological contamination survey has been performed on the oversized container opening.

[15] **IF** the radiological contamination is <u>above</u> the RWP hold point limits,
AND the condition **CANNOT** be corrected as directed by the RCT,
THEN:

[A] **COVER** the open locations as directed by an RCT.

[B] **NOTIFY** supervision of the discrepancy.

5. INSTRUCTIONS—OVERSIZED CONTAINER REMEDIATION (continued)

Supervisor

[C] **NOTIFY** the LTP-OCP Operations Manager or designee and the TA-54 Operations Center of the discrepancy, and **REQUEST** the applicable actions.

Waste Handling Operator

[D] **PROCEED** as directed by supervision/LTP-OCP Operations Manager or designee/TA-54 Operations Center.

[16] **ENSURE** that the negative ventilation (e.g., localized ventilation unit and elephant trunk) has been attached to the ventilation flange.

[17] **ENSURE** that the negative ventilation system has been started.

[18] **INSTALL** the ventilation flange or equivalent over the hole with hex-head screws.

[19] **ENSURE** that there is an air supply into the oversized container located at the approximate opposite end of the oversized container (e.g., hole drilled into the oversized container).

NOTE *The following step may be performed by cutting a small pilot hole or using available data in order to determine the depth of the required cut.*

[20] **ENSURE** that the appropriate blade for the desired cutting depth is installed.

5. INSTRUCTIONS—OVERSIZED CONTAINER REMEDIATION (continued)

WARNING

1. **As the oversized container is cut the loose oversized container pieces may fall or present a pinching hazard resulting in personnel injury.**
2. **Wear leather gloves when extending or retracting extension ladders due to pinch points.**
3. **Workers SHALL maintain a three-point contact with hands and feet while climbing/descending a ladder or while standing on a ladder.**
4. **Workers SHALL <u>not</u> over-extend the body to the side when standing on a ladder.**
5. **Workers SHALL <u>not</u> hold objects while climbing or descending a ladder.**

NOTE 1 *Unexpected items may be shifted or removed from the oversized container and packaged separately in an appropriate safe storage area at any time during the disassembly process provided that the following conditions are satisfied:*

- *The RCT and IH have evaluated the items and both feel that it can be removed without presenting a safety or radiological contamination control concern.*
- *Supervision reviews information known about the items and grants approval for the items to be removed and placed into a safe storage area.*
- *Upon successful completion of off-normal item mitigation, Waste Handling Operators continue unsheathing activities at the same procedural step where this deviation occurred.*
- CS ***(*)** If unexpected items are encountered (e.g., shielded, prohibited, or unknown items) during unsheathing of the oversized container that may have impacted the radiological or hazardous characterization of the oversized container (e.g., criticality safety or radiological safety), supervision is notified and evaluates the necessity of re-characterization and adjustment of the radionuclide inventory.*

NOTE 2 *Steps 5.[21] through 5.[25] may be repeated as necessary during the oversized container remediation process until all of the oversized container contents and the crate material have been remediated.*

[21] **ENSURE** that the sawdust collection system is initiated, and **CUT** the oversized container as necessary to access the waste.

5. INSTRUCTIONS—OVERSIZED CONTAINER REMEDIATION (continued)

[22] **ENSURE** that radiological surveys of the exposed area are performed, as necessary.

[23] **IF** the radiological contamination is above the RWP hold point limits,
AND the condition **CANNOT** be corrected as directed by the RCT,
THEN:

[A] **COVER** the location as directed by an RCT.

[B] **NOTIFY** supervision of the discrepancy.

Supervisor

[C] **NOTIFY** the LTP-OCP Operations Manager or designee and the TA-54 Operations Center of the discrepancy, and **REQUEST** the applicable actions.

Waste Handling Operator

[D] **PROCEED** as directed by supervision/LTP-OCP Operations Manager or designee/TA-54 Operations Center.

NOTE *The following two steps are not applicable to the base of a oversized container when remediating a glovebox. Instructions for the remediation of the oversized container base (bottom) when the oversized container contains a glovebox are provided in later steps of this section.*

[24] **IF** the removed oversized container material radiological measurement (fixed plus removable) indicates greater than 50,000 dpm / 100 cm^2 alpha contamination,
OR the removed oversized container material has evidence of discoloration from waste material (e.g., pump oil)
THEN PLACE the removed oversized container material into the applicable TRU daughter waste container (e.g., 55-gal drum or SWB) and **GO** to Step 5.[26].

CS **NOTE 1** ***(*)*** *Debris contained in the vacuum systems for contamination control and oversized container material from multiple oversized containers may be placed into a single daughter container (e.g., LB99 or B-25). (NCS-CSLA-13-001)*

NOTE 2 *Waste containers to be shipped to NNSS and that are left unattended are to have the lid installed and a tamper indication device (TID) applied by or observed by a WPC to prevent additional items from being placed in the waste container without WPC approval.*

[25] **PLACE** the removed portion of the oversized container in the oversized container disposal area (e.g., B-25 or metal pallet covered with fire retardant plastic).

5. INSTRUCTIONS—OVERSIZED CONTAINER REMEDIATION (continued)

NOTE *Steps 5.[26] through 5.[57] may be performed concurrently or out-of-sequence, as necessary, as the various waste items are encountered or removed from the oversized container.*

[26] **VISUALLY INSPECT** and **DETERMINE** the contents of oversized container for hazards associated with removing the waste.

[27] **IF** items removed from the oversized container are to be temporarily staged before being placed into a waste container,
THEN ESTABLISH one radiological contamination control surface (e.g., fire-retardant plastic sheeting) location (not to exceed a volume equivalent to approximately 3 ft x 3 ft x 3 ft or 27 ft^3) for staging the items as directed by an RCT.

[28] **IF** VE activities are to occur for TRU waste,
THEN ENSURE that CCP-TP-113, Standard Waste Visual Examination, is performed concurrently with this procedure.

[29] **DETERMINE** the 75% capacity of each piece of equipment that will be supporting the weight of waste items (e.g. 1,500 lb for a 2,000 lb gantry crane or 825 lb for a 1,100 lb lift table), and **RECORD** the lowest 75% capacity value on Attachment 1, as necessary.

[30] **IF** the Parent Oversized Container Waste Material Net Weight is less than or equal to the 75% of the lifting device capacity,
AND equipment (e.g., gantry crane or lift table) is to be used to support the waste item,
THEN:

[A] **IF** at any time the weight of a waste item reaches the 75% capacity of the lifting device,
THEN:

[a] **STOP** the waste item lift and **LOWER** the waste item onto a stable surface.

[b] **NOTIFY** the LTP-OCP Operations Manager or designee and the LTP-OCP-SOM of the discrepancy, and **REQUEST** the applicable actions.

[B] **WEIGH** each waste item as it is removed from the oversized container by slowly raising the waste item.

[C] **PLACE** the waste item in the desired location such as a lift table.

5. INSTRUCTIONS—OVERSIZED CONTAINER REMEDIATION (continued)

[31] **IF** the oversized container being remediated contains a glovebox,
THEN:

[A] **ENSURE** that the glovebox is accessible.

NOTE *The following three steps may be performed concurrently or out-of-sequence.*

[B] **IF** the glovebox is to be removed from the oversized container,
AND the glovebox is to be placed on the floor,
THEN PLACE fire-retardant plastic sheeting on the floor and move the glovebox onto the fire-retardant plastic sheeting.

[C] **ENSURE** that the glovebox has been placed on the appropriately configured lift tables to accommodate resizing, as necessary.

[D] **INSTALL** negative ventilation (e.g., localized ventilation units and elephant trunks) to the glovebox, if possible, as directed by an RCT and the RWP.

[E] **REPLACE** the glovebox gloves and bags in accordance with EP-AREAG-WO-DOP-1161, TA-54 Area G TRU Waste Glovebag Operations, <u>or</u> using operator knowledge and RCT assistance, as necessary.

[F] **INSPECT** the glovebox.

NOTE *The following step may be repeated separately for each item removed from a glovebox.*

[G] **IF** the glovebox is **NOT** empty (e.g., contains equipment or loose waste items),
THEN:

[a] **DOCUMENT** the contents of the glovebox with as much detail as possible in the Comments section of Attachment 1.

[b] **NOTIFY** supervision of the glovebox contents.

Supervision

[c] **EVALUATE** the glovebox contents and **DETERMINE** whether the contents can be removed and remediated with the assistance of the necessary personnel (e.g., RCT, IHS, Environmental).

5. INSTRUCTIONS—OVERSIZED CONTAINER REMEDIATION (continued)

Waste Handling Operator

[d] **BAGOUT** the glovebox contents that were identified to be remediated in accordance with EP-AREAG-WO-DOP-1161 or as directed by supervision, as necessary.

NOTE *The remediation of the items removed from the glovebox may be performed out-of-sequence.*

[e] **REMEDIATE** the items removed from the glovebox, as necessary, in accordance with this procedure and RCT instructions.

[H] **IF** the glovebox is **NOT** to be evaluated as an SCO candidate, **THEN GO** to Step 5.[31][U].

[I] **FORWARD** a sketch of the glovebox that includes each face of the glovebox and the interior with the dimensions, estimated weight, and proposed survey points to the LTP-OCP Operations Manager or designee.

LTP-OCP Operations Manager or Designee

[J] **FORWARD** the glovebox sketch with dimensions to the Waste Management – Services (WM SVS).

5. INSTRUCTIONS—OVERSIZED CONTAINER REMEDIATION (continued)

WARNING

1. **Decontamination activities are to be performed by personnel trained in the use of the particular decontamination process or under the direct supervision of individuals trained in the decontamination process in order to reduce the potential for the spread of radiological contamination.**

2. **Due to some decontamination solutions being either corrosive to the skin and eyes or a skin and eye irritant impervious protective clothing such as nitrile, neoprene, or butyl rubber gloves; apron; boots; or whole Tychem or equivalent bodysuit and eye and face protection such as safety glasses with side shields and a faceshield, goggles and a faceshield or a full-face respirator may be required to be worn in accordance with the applicable MSDS.**

NOTE 1 *Long handled tools may be needed to access larger gloveboxes for decontamination and radiological information.*

NOTE 2 *Waste generated from the decontamination process is disposed of in accordance with Waste Management Coordinator (WMC) instructions.*

Waste Handling Operator

[K] **DECONTAMINATE** the glovebox surfaces using the following techniques:
- **APPLY** and **WIPEDOWN** the glovebox surfaces using Fantastik® and Kimwipes® or other decontamination solution in accordance with guidance provided by the decontamination solution manufacturer's instructions and as directed by supervision or an RCT.
- Use good decontamination removal techniques (e.g., wipe, flip and wipe, and fold and wipe).

[L] **REQUEST** that an RCT perform the radiological measurements (both internally and externally to the glovebox) in accordance with the survey point map.

[M] **IF** the oversized container base (bottom) satisfies the following criteria:
- Oversized Container base is structurally <u>sound</u>
- <u>No</u> evidence of discoloration from waste material (e.g., pump oil)
- Less than 1 x 10^6 dpm / 100 cm^2 alpha fixed contamination
- Less than 24,000 dpm / 100 cm^2 alpha removable contamination

THEN:

[a] **SPRAY** InstaCote™ CC Fix or equivalent on all areas of the radiological contamination.

5. INSTRUCTIONS—OVERSIZED CONTAINER REMEDIATION (continued)

[b] **SECURE** (e.g., strap) the glovebox to the oversized container base.

[c] **GO** to Step 5.[31][P].

[N] **ENSURE** that the glovebox has been removed from the oversized container base (bottom).

[O] **IF** the oversized container base (bottom) satisfies the following criteria:
- Oversized container base is structurally unsound
- Evidence of discoloration from waste material (e.g., pump oil)
- Greater than 1 x 10^6 dpm / 100 cm^2 alpha fixed plus removable contamination

THEN PLACE the removed oversized container material into the applicable TRU daughter waste container (e.g., 55-gal drum or SWB).

NOTE 1 *The following step may be performed out of sequence.*

NOTE 2 *The weight of the glovebox may be obtained by weighing the glovebox and associated container and then subtracting the container tare weight if a certified container tare weight is known.*

[P] **WEIGH** the glovebox, and **RECORD** the glovebox weight and scale information on Attachment 1.

[Q] **PROVIDE** a copy of the completed survey point map and waste item certified weight to the LTP-OCP Operations Manager or designee and WM-SVS and **REQUEST** a determination whether the glovebox satisfies the requirements as an SCO in accordance with EP-TD-2204, Requirements Document for Radiological Characterization of Surface Contaminated Objects at LANL and satisfies LLW criteria (i.e., less than 100 nCi/gm).

LTP-OCP Operations Manager or designee

[R] **WHEN** the SCO determination is complete,
THEN FORWARD a copy of the SCO determination to applicable supervisor or designee.

5. INSTRUCTIONS—OVERSIZED CONTAINER REMEDIATION (continued)

Waste Handling Operator

[S] **IF** the glovebox satisfies the SCO requirements,
THEN:

[a] **PACKAGE** the glovebox in accordance with the applicable Waste Disposal Request (WDR) packaging specification (e.g., wrap the SCO with Heat Shrink Wrap™ or equivalent) as directed by supervision and a WPC, as necessary.

NOTE *The glovebox may be placed into a container inside of a contamination area or with the assistance of an RCT the glovebox may be removed from the contamination area and placed into a container outside of a contamination area.*

[b] **MOVE** (e.g., out of the SSSR AREA) and **PACKAGE** the glovebox as directed by the LTP-OCP Shift Operations Manager or LTP-OCP Operations Manager and with the assistance of an RCT.

NOTE *The following step may be performed out of sequence.*

[c] **IF** the glovebox packaging (glovebox plus container) is to be considered waste,
THEN WEIGH the glovebox package (glovebox plus container), and
RECORD the glovebox package weight on Attachment 1.

NOTE *Labels are generated as part of performing the WCATS desktop remediation application.*

[d] **OBTAIN** a container LLW label.

[e] **ENSURE** that a LLW label has been applied to the package (e.g., glovebox or outer metal box).

NOTE *The collection of acceptable knowledge documentation is in order to support the disposition of the SCO at the offsite Treatment, Storage, and Disposal Facility (TSDF).*

[f] **PROVIDE** acceptable knowledge documentation (e.g., photographs, waste description, and the presence or absence of liquids) to the LTP-OCP Operations Manager or designee.

5. INSTRUCTIONS—OVERSIZED CONTAINER REMEDIATION (continued)

[g] **GO** to Step 5.[52].

[T] **IF** the glovebox does **NOT** satisfy the SCO requirements,
AND DIRECTED by supervision to continue decontamination activities,
THEN GO to Step 5.[31][K].

[U] **ENSURE** that the necessary contamination control measures (e.g., sleeving or approved fixative applied to glovebox) are in place as directed by an RCT.

[V] **ENSURE** that any impedance to the glovebox size reduction has been identified and either the impedance has been removed or a size reduction path has been identified around the impedance.

WARNING

1. **Size reduction hand tools and power tools are sharp and may bind resulting in personnel injury or radiological contamination if the PPE is compromised.**

2. **Use of size reduction tools may generate sparks increasing the potential of a fire.**

3. **Slow-cutting size reduction tools (e.g., nibblers, crimpers, and pipe wheels) are to be used in order to reduce the potential for personnel injury and to allow time for operators to react to abnormal conditions.**

4. **Size reduction activities are to be performed using radiological contamination control methods (e.g., localized contamination control enclosure or HEPA vacuum) directed by an RCT in order to prevent the spread of loose radiological contamination and to prevent personnel radiological contamination.**

CS 5. **The HEPA vacuum designated for collecting liquid is not to be used for contamination control in order to reduce the possibility of a criticality incident.**

6. **Flying debris from cutting tools (e.g., nibbling) may occur and personnel are to remain at a safe distance (approximately 10 ft or more) from the cutting activity or wear the appropriate PPE (face and eye protection) to prevent personnel injury.**

[W] **SIZE** reduce the glovebox using the appropriate cutting tools as directed by supervision, an RCT, and the RWP.

5. INSTRUCTIONS—OVERSIZED CONTAINER REMEDIATION (continued)

[X] **ENSURE** that the debris is covered (e.g., fire-retardant plastic and tape) in order to contain radiological contamination and to mitigate sharp edges.

[Y] **PLACE** the TRU debris in a daughter waste container (e.g., SWB or 55-gal drum), minimizing void spaces within the TRU daughter waste container (e.g., SWB or 55-gal drum).

[32] **IF** liquids are present inside of the oversized container,
THEN CHECK (√) YES on Attachment 1 and **DISPOSITION** the liquids in accordance with Section 6, Liquid Disposition.

[33] **IF** an UNVENTED TRU WASTE DRUM (i.e., 30-, 55-, 85-, or 110-gal drum) is found,
THEN:

[A] **STOP** work.

[B] **NOTIFY** supervision of the discrepancy.

Supervisor

[C] **($) NOTIFY** the LTP-OCP Operations Manager or designee and the TA-54 Operations Center of the oversized container number and of the requirement to ensure that the applicable action statement of LCO 3.4.1 has been entered in accordance with EP-DIV-AP-13, WDP TSR-Related Operational Limits Actions Compliance Tracking.

Waste Handling Operator

[D] **WHEN DIRECTED** by supervision or the TA-54 Operations Center to overpack the UNVENTED TRU WASTE DRUM,
THEN PLACE the UNVENTED TRU WASTE DRUM in an OVERPACK/DOUBLEPACK in accordance with EP-AREAG-WO-DOP-1070, TA-54 Area G Unvented TRU Waste Container Handling and Storage.

[E] **WHEN** the UNVENTED TRU WASTE DRUM has been overpacked,
THEN NOTIFY the TA-54 Operations Center of the UNVENTED TRU WASTE DRUM status.

5. INSTRUCTIONS—OVERSIZED CONTAINER REMEDIATION (continued)

[34] **IF** actual or suspected Class 1 oxidizers, flammable metals, or pyrophoric materials/items are encountered,
OR sparking of the oversized container contents is observed at any time during the processing of waste material,
THEN:

[A] **STOP** waste processing, and **DOCUMENT** the discrepancy in the Comments section of Attachment 1.

[B] **NOTIFY** supervision of the discrepancy.

Supervisor

[C] **NOTIFY** the following of the discrepancy:

- TA-54 Operations Center/Shift Operations Manager
- LTP-OCP Operations Manager or designee
- Industrial Hygienist
- Shift Technical Engineer

NOTE *The RCRA Hazardous Waste Code for the waste container may need to be changed based on the material identified and a WMC is to be notified for assistance with the waste characterization.*

Waste Handling Operator

[D] **OBTAIN** an empty TRU daughter container, and **PLACE** the suspect item into the empty TRU daughter container.

[E] **CLOSE** the daughter container in accordance with EP-AREAG-WO-DOP-1069, TA-54 Area G TRU SWB/Drum Operations, and **RETURN** to the following step.

5. INSTRUCTIONS—OVERSIZED CONTAINER REMEDIATION (continued)

WARNING

Glass sample vials may contain residual granular materials which can generate sparks when subjected to mechanical agitation. To reduce the possibility of breaking a glass sample vial and the generation of sparks, glass sample vials SHALL be handled with care and void volume reduction activities SHALL be performed without excessive force. (EP-DIV-REPORT-09)

NOTE 1 *Do not crush any containers. Deformation of containers or container lids is allowable to aid in lid removal, as necessary, and help verify during RTR examination the container is not sealed.*

NOTE 2 *Package types within the* oversized container *that have the qualities presented in the following step pose no potential for hydrogen build-up.*

NOTE 3 *If YES is checked (√) in the following step for any container then that container is not to be remediated because it is a SAC 5.7.12 non-compliant container except as allowed by SAC 5.7.18.*

[35] **($) DETERMINE** whether there are any SAC 5.7.12 non-compliant containers present (i.e., TRU waste containers in the oversized container that do not have the following attributes), and **CHECK** (√) YES or NO on Attachment 1: (SAC 5.7.12)

- Plastic container with any type of lid
- Any container with a plastic lid
- Container without a gasket (e.g., containers with slip lids, paint cans, and other similar containers of any volume)
- Container with a slip-on lid (with or without a gasket)
- Container that does not contain TRU waste
- Fiber board containers of any volume

5. INSTRUCTIONS—OVERSIZED CONTAINER REMEDIATION (continued)

NOTE *Sealed containers with bolted lids/flanges are exempt from the SAC 5.7.12 requirements and may be remediated inside within an SSSR PROCESS AREA contamination control enclosure in accordance with SAC 5.7.18.*

[36] **IF** processing a sealed container with a bolted lid/flange,
THEN:

NOTE *The following four steps may be performed out of sequence.*

Supervisor or designee

[A] **ENSURE** that that the contamination control enclosure is posted to prevent the performance of hot work or other potential spark/flame initiation activities during the remediation of the sealed containers, and **CHECK** (√) SAT or UNSAT on Attachment 1.

Waste Handling Operator

[B] **($) ENSURE** that all sealed container flanges have been raised such that each flange (i.e., openings) is at the high-point of the sealed container, and **CHECK** (√) SAT or UNSAT on Attachment 1. (SAC 5.7.18)

[C] **($) VERIFY** that each contamination control enclosure ventilation Air Mover D/P reading satisfies the following criteria, and **CHECK** (√) SAT or UNSAT on Attachment 1.

- Dome 231 is ≥ 0.5 to ≤ 2.5 in. wc
- Building 412 is ≥ 0.5 to ≤ 3.5 in. wc
- Dome 375 is ≥ 1.0 to ≤ 2.5 in. wc

[D] **VISUALLY INSPECT** the bonding mat/wires for the following, and **CHECK** (√) SAT or UNSAT on Attachment 1:

- Degradation (e.g., no indication of cracked parts, missing fasteners, loose parts, excessive wear, or unusual deformation)
- Discoloration and brittle or stiff areas

[E] **IF** UNSAT was checked (√) in the previous step,
THEN REPLACE the bonding mat/wires, as necessary, and **GO** to Step 5.[36][D].

5. INSTRUCTIONS—OVERSIZED CONTAINER REMEDIATION (continued)

WARNING

Unvented, sealed waste packages may contain a concentration of flammable/combustible gas and are to be bonded in order to ensure that an electrical potential difference does <u>not</u> exist and to minimize any possible adverse effects from potentially releasing hydrogen.

NOTE 1 *Proper bonding requires that the bonding clamping devices (clamp with teeth) be firmly attached to a metal surface for proper continuity, which may require the scratching of the seal container surface with the clamping device.*

NOTE 2 *The following step may be performed out of sequence but before removing the sealed container flange bolts.*

[F] **CONNECT** the bonding wires between the sealed containers and the bonding mat as follows:

[a] **ENSURE** that the bonding mat has been positioned such that the operator can stand on the mat while loosening sealed container flange cover bolts and the bonding wire can reach between the bonding mat and the sealed containers.

[b] **($) ENSURE** that sealed containers have been bonded to the bonding mat. (SAC 5.7.18)

[c] **MEASURE** the resistance between the sealed containers and the bonding mat, and **RECORD** the resistances on Attachment 1:

[d] **($) DETERMINE** whether the resistance value is less than or equal to 5 ohms, **AND CHECK** (√) SAT or UNSAT on Attachment 1. (SAC 5.7.18)

[e] **IF** the resistance of the bonding wire is greater than 5 ohms, **THEN NOTIFY** supervision and the System Engineer of the discrepancy and **REQUEST** further direction.

5. INSTRUCTIONS—OVERSIZED CONTAINER REMEDIATION (continued)

[f] **IF** the bonding wire becomes disconnected while removing the sealed container flange cover,
THEN:

1. **STOP** the work activity.

2. **REQUEST** the applicable actions from supervision.

NOTE 1 *Each containment enclosure around a sealed container flanges is constructed based on operator knowledge and skill and the direction of an RCT.*

NOTE 2 *The following step may be performed out of sequence.*

[G] **CONSTRUCT** a containment enclosure (e.g., bag) around the flanges of one sealed container as directed by supervision and an RCT.

WARNING

1. **The sealed container is to be observed for pressurization during the venting processes and all work activities are to be stopped if pressurization is identified in order to allow any trapped gases to be vented and preventing a potential deflagration which could result in personnel injury.**

2. **Leaving threads of the sealed container flange cover bolts partially engaged prevents the flange cover from being expelled due to pressure in the sealed container and protects the operator from potential injuries due to a flying object.**

NOTE 1 *The assumption is that the sealed container will be pressurized.*

NOTE 2 *Non-sparking hand tools are to be used for removing the sealed container flange cover.*

NOTE 3 *The following step is to be performed with the sealed container and bonding mat bonding wire attached.*

NOTE 4 *Step 5.[36][Q] may be performed in conjunction with the following step in addition to being performed in sequence in order to obtain an initial LEL/LFL value.*

[H] **($) PAUSE** all spark-generating operations, and **CHECK** (√) SAT or UNSAT on Attachment 1. (SAC 5.7.18)

5. INSTRUCTIONS—OVERSIZED CONTAINER REMEDIATION (continued)

[I] **($) STAND** on the bonding mat and **SLOWLY LOOSEN** a sealed container flange cover bolt enough to break the flange seal while leaving some of the bolt threads engaged in the nut using non-sparking tools. (SAC 5.7.18)

[J] **($) REPEAT** the previous step until all of the bolts have been loosened or the flange cover has separated from the flange without completely removing the flange cover. (SAC 5.7.18)

[K] **IF** the sealed container flange cover has **NOT** separated from the flange,
THEN SEPARATE the cover from the flange using non-sparking tools.

[L] **IF** there is an condition indication that the sealed container is pressurized,
THEN STOP all work activities until the sealed container has vented.

[M] **IF** there are multiple sealed containers joined together,
THEN REPEAT Steps 5.[36][G] through 5.[36][L] for each sealed container.

[N] **IF** there are multiple sealed containers joined together,
AND the flange cover of each sealed container has been separated from the flange,
THEN:

[a] **CONSTRUCT** a containment enclosure (e.g., tunnel) surrounding all of the sealed container flanges as directed by supervision and an RCT in order to ventilate the three sealed containers.

[b] **BREACH** each individual sealed container flange contamination enclosures (e.g., bags).

[O] **RECORD** the sealed container venting start time on Attachment 1.

[P] **WHEN** greater than or equal to 30 min. has elapsed,
THEN:

[a] **RECORD** the time that the venting was stopped on Attachment 1.

[b] **DETERMINE** whether the sealed container vented for greater than or equal to 30 min., and **CHECK** (√) SAT or UNSAT on Attachment 1.

5. INSTRUCTIONS—OVERSIZED CONTAINER REMEDIATION (continued)

NOTE 1 *MultiRAE Monitor measures in %LEL so that a 100% reading on the MultiRAE Monitor is equivalent to 100% of a gas (i.e., 4% hydrogen). Additionally, the allowed limit for hydrogen has been reduced from 100% of LEL to 25% in order to provide for an adequate margin of safety to ensure the ignition of flammable gases is prevented.*

NOTE 2 *For the purposes of this procedure LFL and LEL values are the same.*

[Q] **MEASURE** the %LEL and % oxygen at the opening of each sealed container using the identified MultiRAE Monitor, and **RECORD** the %LEL and % oxygen on Attachment1.

[R] **($) CHECK** (√) SAT or UNSAT on Attachment 1 to indicate whether the %LEL Hydrogen and % oxygen satisfy the following criteria: (SAC 5.7.18, PD1220 and NFPA 55)

- Less than 25% LEL hydrogen
- Greater than or equal to 10% oxygen

[S] **IF** UNSAT was checked (√) in the previous step,
THEN:

[a] **STOP** the work activity.

[b] **NOTIFY** the TA-54 Operations Center and the LTP-OCP Operations Manager of the waste container condition and **REQUEST** the applicable actions.

[c] **PERFORM** actions as directed by the LTP-OCP Operations Manager.

[T] **DISCONNECT** the bonding wire from the sealed container and mat.

[U] **($) VERIFY** that each contamination control enclosure ventilation Air Mover D/P reading satisfies the following criteria, and **CHECK** (√) SAT or UNSAT on Attachment 1.

- Dome 231 is ≥ 0.5 to ≤ 2.5 in. wc
- Building 412 is ≥ 0.5 to ≤ 3.5 in. wc
- Dome 375 is ≥ 1.0 to ≤ 2.5 in. wc

[V] **GO** to Step 5.[38].

5. INSTRUCTIONS—OVERSIZED CONTAINER REMEDIATION (continued)

NOTE *Package types within the* oversized container *that have the qualities presented in the following step are considered sealed and are referred to as "SAC 5.7.12 non-compliant containers" within this procedure.*

[37] **($) IF** any containers discovered in the oversized container are metal or glass with a positive mechanical locking mechanism, such as a metal screw-on lid, or a metal locking, bolted, or snap-on lid,
THEN:

[A] **NOTIFY** supervision of the presence of SAC 5.7.12 non-compliant containers.

NOTE 1 *Vented Collection Containers for gathering SAC 5.7.12 non-compliant containers may be any container which satisfies the requirements as a vented Type 7A container (e.g., 55-gal drum or SWB).*

NOTE 2 *Multiple SAC 5.7.12 non-compliant containers from a single oversized container may be placed inside of the same vented Collection Container.*

NOTE 3 *SAC 5.7.12 non-compliant containers should not be commingled with other types of TRU waste.*

[B] **PLACE** the SAC 5.7.12 non-compliant containers inside of a vented TRU Collection Container (e.g., vented Type 7A TRU daughter drum or other approved container) that is dedicated for such containers.

[C] **PLACE** the lid on the vented TRU Collection Container.

NOTE *Containers that are compliant with SAC 5.7.12 with a volume of less than or equal to three liters may be overpacked in an outer container without demonstrating that the container is not sealed. (P930-1 Attachment 2 Section 2.1.3)*

Waste Handling Operator

[38] **PLACE** any containers that are compliant with SAC 5.7.12 and have a volume of greater than three liters within a certified glovebag OR within an RP SME-approved containment by removing tape, lid, cap, stopper or other appropriate method in order to demonstrate through the nondestructive examination (NDE) process that the container is not sealed.

[39] **DETERMINE** whether there are any containerized liquids, and **CHECK** (√) YES or NO on Attachment 1.

5. INSTRUCTIONS—OVERSIZED CONTAINER REMEDIATION (continued)

CS

NOTE 1 ***(*)*** *Only the contents of a single oversized container may be placed into a daughter waste container in order to ensure compliance with the criticality safety requirements and MAR inventory requirements. (NCS-CSLA-13-001 and NCS-CSED-14-004)*

NOTE 2 *Hazardous waste containers with liquids of any amount or configuration that have been solidified (absorbed) are not required to be managed on secondary containment pallets nor are they required to have a FREE LIQUIDS label affixed to the container.*

[40] **IF** containers compliant with SAC 5.7.12 of any volume with liquid are discovered, **OR** non-transparent containers compliant with SAC 5.7.12 are discovered, **THEN:**

[A] **PLACE** the container into an RP SME-approved localized containment control enclosure or **BAG-IN** the container into a certified glovebag in accordance with EP-AREAG-WO-DOP-1161.

[B] **OPEN** the container, and **DETERMINE** whether liquid is present in the container, as necessary.

[C] **IF** no liquid is present in the container, **THEN:**

[a] **BAGOUT** the container in accordance with EP-AREAG-WO-DOP-1161, as necessary.

[b] **GO** to Step 5.[41].

[D] **DOCUMENT** the approximate liquid volume on Attachment 1.

[E] **PERFORM** a pH test on the liquid, and **DOCUMENT** the results on Attachment 1:

- Acid (less than 7)
- Caustic (base) greater than 7

[F] **NEUTRALIZE** the liquid, as necessary.

5. INSTRUCTIONS—OVERSIZED CONTAINER REMEDIATION (continued)

CAUTION

To eliminate hazards to the glovebag (i.e., table and gloves); use the appropriate absorbing agents and compatible container to absorb the liquids.

[G] **OBTAIN** the appropriate absorbing agent and a compatible container.

[H] **PLACE** the absorbing material in a compatible container.

[I] **TRANSFER** the liquid into the compatible container, as required.

CS **NOTE** ***(*)*** *Only the contents of a single oversized container may be placed into a daughter waste container in order to ensure compliance with the criticality safety requirements and MAR inventory requirements. (NCS-CSLA-13-001 and NCS-CSED-14-004)*

[J] **BAGOUT** the container in accordance with EP-AREAG-WO-DOP-1161, as necessary, and **PLACE** the absorbed liquid in the daughter waste containers.

[41] **IF** a waste package within the oversized container has an on-contact dose rate reading (sum of gamma and neutron) of greater than 190 mrem/hr,
AND the waste package fits inside of a POC,
AND directed by supervision,
THEN:

[A] **RECORD** the total PE-Ci MAR and FGE of parent container value on Attachment 3, TA-54 Area G POC Waste Logsheet.

[B] **OBTAIN** a pre-assembled POC, in accordance with EP-AREAG-WO-DOP-1015, TA-54 Area G Pipe Overpack Container Operations and **RECORD** the POC Assembly serial number on Attachment 3.

[C] **PLACE** the POC near the vicinity of the oversized container, if required.

[D] **PLACE** the waste package in the POC.

[E] **RECORD** the oversized container number, POC waste description, and on contact dose rate being placed in the POC on Attachment 3.

5. INSTRUCTIONS—OVERSIZED CONTAINER REMEDIATION (continued)

[F] **RECORD** the number of layers of confinement on the waste item on Attachment 3.

[G] **REPEAT** Steps 5.[41][B] through 5.[41][F] until all waste packages with an on contact dose rate reading (sum of gamma and neutron) of greater than 190 mrem/hr have been remediated within the oversized container, as required.

[H] **CLOSE** the POC container in accordance with EP-AREAG-WO-DOP-1015 and EP-AREAG-WO-DOP-1069, and **RETURN** to the following step.

[42] **IF** a waste package within the oversized container has an on-contact dose rate reading (sum of gamma and neutron) of greater than 190 mrem/hr,
AND the waste package does **NOT** fit inside of a POC,
THEN:

[A] **STOP** work, and **DOCUMENT** the discrepancy in the Comments section of Attachment 1.

[B] **NOTIFY** supervision and the LTP-OCP Operations Manager or designee of the discrepancy and **REQUEST** the applicable actions.

[43] **DETERMINE** whether any potentially pressurized containers are present in the oversized container, and **CHECK** (√) YES or NO on Attachment 1.

WARNING

Pressurized containers that have been previously punctured and that are inside of a radiological barrier (plastic bag) present a radiological contamination hazard if the radiological barrier is breached. RCT is required to determine the appropriate secondary containment when the radiological barrier is to be breached.

[44] **IF** there is evidence that a pressurized container has been previously punctured and is empty,
THEN:

[A] **DISPOSITION** the punctured container by placing an indicator (e.g., tie wrap) into the hole with the assistance of an RCT, as necessary, and **SECURE** with tape, and **DOCUMENT** the disposition in the Comments section on Attachment 1.

5. INSTRUCTIONS—OVERSIZED CONTAINER REMEDIATION (continued)

[B] **PLACE** the punctured container into a TRU daughter waste container, near the top of the TRU daughter waste container (e.g., SWB or 55-gal drum).

[45] **IF** a pressurized item is **NOT** punctured or breached,
THEN:

NOTE 1 *Pressurized cylinders and aerosol cans **SHALL** be placed in separate Prohibited Item Collection Containers (e.g., one collection container for cylinders and a separate collection container for aerosol cans).*

CS **NOTE 2** ***(*)*** *Aerosol cans from multiple oversized container may be placed into the same Prohibited Item Collection Container. (NCS-CSLA-13-001)*

CS **NOTE 3** ***(*)*** *Daughter containers and liquid waste may only contain waste from a single Bolas Grande. There are no exceptions for debris contained in a vacuum system used for contamination control or aerosol cans. (NCS-CSLA-14-016)*

[A] **OBTAIN** the Prohibited Item Collection Container and **PLACE** the Prohibited Item Collection Container in a location as directed by supervision, as required.

[B] **ENSURE** that the following is recorded or checked (√) on Attachment 2, TA-54 Area G Oversized Container Prohibited Item Collection Container Data Sheet:

- Date created
- Pressurized Container/Aerosol Cans/Other [check (√) one]
- Date Item Added
- Parent Oversized Container Number
- Parent Oversized Container Accumulation Start Date or Received Date (non-hazardous waste container)
- Parent Oversized Container EPA Code, if applicable
- Item Description (use trade name e.g., WD-40, paint, as applicable)
- Item Shape
- Item Size
- Item Labeling, if applicable or N/A
- Item Weight (lb)

5. INSTRUCTIONS—OVERSIZED CONTAINER REMEDIATION (continued)

NOTE *Removing the external radiological contamination from the pressurized item removes the MAR from the item and thus eliminates the need to track the PE-Ci value and the FGE value of the item.*

[C] **DECONTAMINATE** (as much as possible) the pressurized item by wiping down with Kimwipes® or equivalent or **CONTAIN** any radiological contamination, as directed by the RCT.

NOTE *Item Identification labels are generated as part of performing the WCATS desktop remediation application.*

[D] **OBTAIN** a container Item Identification Number, and **RECORD** Item ID number on Attachment 2.

[E] **PLACE** the Item ID Number label on the pressurized item.

[F] **PLACE** the pressurized item into the Prohibited Item Collection Container.

[G] **ENSURE** that the Prohibited Item Collection Container is labeled with a hazardous waste label and accumulation start date.

NOTE *The hazardous waste label may need to be replaced to ensure that all information is added and legible.*

[H] **ENSURE** that all applicable EPA codes from the associated Oversized Container are on the hazardous waste label for the Prohibited Item Collection Container, as applicable.

[I] **ENSURE** that the Prohibited Item Collection Container lid has been placed on the Prohibited Item Collection Container.

[J] **IF** the Prohibited Item Collection Container is full,
THEN:

[a] **CLOSE** the Prohibited Item Collection Container in accordance with EP-AREAG-WO-DOP-1069.

NOTE *The WMC may be notified at a time that is operationally convenient.*

Supervisor

[b] **NOTIFY** the WMC of the Prohibited Item Collection Container contents.

5. INSTRUCTIONS—OVERSIZED CONTAINER REMEDIATION (continued)

NOTE *Non-liquid hazardous waste items listed below may be placed into the daughter waste container for disposal at the WIPP; all WIPP WAC non-compliant items listed in the following step must be placed into a separate collection container for final disposition.*

Waste Handling Operator

[46] **IF** any of the following items are found during the processing of the waste,

- Lead-elemental (e.g., circuit boards)
- Mercury-elemental (e.g., thermometers or switches)
- Batteries (e.g., lead/acid, nickel cadmium, or lithium)
- Light bulbs (i.e., incandescent or fluorescent)
- PCB items (e.g., ballasts, capacitors, or transformers)

THEN:

[A] **RECORD** the item descriptive information (item type, size, trade name, if available) in the Comments section on Attachment 1.

CS **NOTE 1** ***(*)*** *Only the contents of a single oversized container may be placed into a daughter waste container in order to ensure compliance with the criticality safety requirements and MAR inventory requirements. (NCS-CSLA-13-001 and NCS-CSED-14-004)*

NOTE 2 *The WMC may be notified at a time that is operationally convenient.*

Supervisor

[B] **NOTIFY** the WMC of items found and whether the items are to be placed into a separate collection container, or placed into a daughter waste container.

NOTE 1 *The WMC can assist with assigning the appropriate RCRA Hazardous Waste Codes to the daughter container.*

NOTE 2 *The following step may be performed when operationally convenient but must be completed within 24 hrs of the identification of the item.*

[C] **ENSURE** that the appropriate RCRA Hazardous Waste Codes are assigned to the waste container that receives the item (e.g., collection drum).

[D] **OBTAIN** an item identification number from the WMC and **DISPOSITION** as debris waste in accordance with Step 5.[49].

5. INSTRUCTIONS—OVERSIZED CONTAINER REMEDIATION (continued)

NOTE *PCB Item Number labels may be attached to the waste container during closing.*

Waste Handling Operator

[47] **IF** a potential non-liquid PCB item/article was found,
THEN:

[A] **PLACE** a PCB Item Number label on the article to be removed or on the waste container receiving the PCB waste.

[B] **PLACE** the PCB item into a daughter waste container or collection container, as applicable.

[C] **RECORD** the PCB Item Number on Attachment 1 and/or Attachment 2, as applicable.

WARNING

1. **Do not handle or move waste contents until after the initial contents survey is completed and approval to do so is granted by an RCT in order to prevent personnel injury and the spread of radiological contamination.**

2. **Waste items may be unwrapped (e.g., primary containment breached), as necessary, to permit the examination of the waste material, only with authorization by supervision and an RCT in order to prevent the spread of radiological contamination.**

NOTE *Radiological contamination of the TRU HEPA filters is evaluated as the TRU HEPA filters are removed.*

[48] **IF** HEPA filters are present in the oversized container:
THEN:

[A] **INSPECT** the integrity of the HEPA filter packaging, as applicable, and **REPAIR** (e.g., wrap in plastic sheeting and apply RP-approved tape) the HEPA filter packaging integrity damage, as necessary.

[B] **REMOVE** the HEPA filters from the oversized container.

5. INSTRUCTIONS—OVERSIZED CONTAINER REMEDIATION (continued)

NOTE *The following step provides a method for tracking the layers of confinement placed into a daughter waste container in order to document the highest layer of confinement placed inside of a daughter waste container. Appendix 2, TRU Waste Container Inner Package Confinement Layer Worksheet, is not a record.*

[C] **DETERMINE** the number of layers of confinement around the HEPA filter, and **CHECK** (√) the applicable box on Appendix 2.

[D] **IF** there are greater than six layers of confinement around the HEPA filter, **THEN:**

[a] **STOP** the waste processing

[b] **NOTIFY** supervision and the LTP-OCP Operations Manager of the discrepancy and **REQUEST** the applicable actions.

[E] **PLACE** the HEPA filter into a TRU daughter waste container (e.g., SWB or 55-gal drum), minimizing void spaces within the TRU daughter waste container (e.g., SWB or 55-gal drum) and **RECORD** the TRU daughter waste container number on Appendix 2.

WARNING

The integrity of any waste debris packaging is to be maintained, if possible, in order to minimize the possibility of the spread of radiological contamination.

[49] **IF** TRU Debris is to be remediated, **THEN:**

[A] **POSITION** the debris as necessary to allow remediation (e.g., reposition in the oversized container or remove from the oversized container).

[B] **IF** the TRU debris is **NOT** to be size reduced, **THEN:**

[a] **INSPECT** the integrity of the debris packaging, as applicable.

[b] **REPAIR** (e.g., wrap in plastic sheeting and apply RP-approved tape) the debris packaging integrity damage, as necessary.

5. INSTRUCTIONS—OVERSIZED CONTAINER REMEDIATION (continued)

[c] **IF** the debris is **NOT** to be decontaminated,
THEN GO to Step 5.[49][K].

WARNING

1. **Decontamination activities are to be performed by personnel trained in the use of the particular decontamination process or under the direct supervision of individuals trained in the decontamination process in order to reduce to potential for the spread of radiological contamination.**

2. **Due to some decontamination solutions being either corrosive to the skin and eyes or a skin and eye irritant, impervious protective clothing such as nitrile, neoprene, or butyl rubber gloves; apron; boots; or whole Tychem or equivalent bodysuit and eye and face protection such as safety glasses with side shields and a faceshield, goggles and a faceshield or a full-face respirator may be required to be worn in accordance with the applicable MSDS.**

NOTE *Waste generated from the decontamination process is disposed of in accordance with WMC instructions.*

[d] **DECONTAMINATE** the debris surfaces using the following techniques:
- **APPLY** and **WIPEDOWN** the debris surfaces using Fantastik® and Kimwipes® or other decontamination solution in accordance with guidance provided by the decontamination solution manufacturer's instructions and as directed by supervision or an RCT.
- Use good decontamination removal techniques (e.g., wipe, flip and wipe, and fold and wipe).

[e] **ENSURE** that the debris item has been closed (e.g., Bolas Grande Sphere), as necessary.

[f] **GO** to Step 5.[49][K].

[C] **ENSURE** that any impedance to the size reduction has been identified and either the impedance has been removed <u>or</u> a size reduction path has been identified around the impedance.

[D] **IF** the debris is **NOT** to be decontaminated,
THEN GO to Step 5.[49][G].

5. INSTRUCTIONS—OVERSIZED CONTAINER REMEDIATION (continued)

WARNING

1. **Decontamination activities are to be performed by personnel trained in the use of the particular decontamination process or under the direct supervision of individuals trained in the decontamination process in order to reduce to potential for the spread of radiological contamination.**

2. **Due to some decontamination solutions being either corrosive to the skin and eyes or a skin and eye irritant impervious protective clothing such as nitrile, neoprene, or butyl rubber gloves; apron; boots; or whole Tychem or equivalent bodysuit and eye and face protection such as safety glasses with side shields and a faceshield, goggles and a faceshield or a full-face respirator may be required to be worn in accordance with the applicable MSDS.**

NOTE *Waste generated from the decontamination process is disposed of in accordance with RCT instructions.*

[E] **DECONTAMINATE** the debris surfaces using the following techniques:
- **APPLY** and **WIPEDOWN** the debris surfaces using Fantastik® and Kimwipes® or other decontamination solution in accordance with guidance provided by the decontamination solution manufacturer's instructions and as directed by supervision or an RCT.
- Use good decontamination removal techniques (e.g., wipe, flip and wipe, and fold any wipe).

[F] **ENSURE** that the necessary contamination control measures (e.g., sleeving or approved fixative applied to glovebox) are in place as directed by an RCT.

5. INSTRUCTIONS—OVERSIZED CONTAINER REMEDIATION (continued)

WARNING

1. **Size reduction hand tools and power tools are sharp and may bind resulting in personnel injury or radiological contamination if the PPE is compromised.**

2. **Use of size reduction tools may generate sparks increasing the potential of a fire.**

3. **Slow-cutting size reduction tools (e.g., nibblers, crimpers, and pipe wheels) are to be used in order to reduce the potential for personnel injury and to allow time for operators to react to abnormal conditions.**

4. **Size reduction activities are to be performed using radiological contamination control methods (e.g., localized contamination control enclosure or HEPA vacuum) directed by an RCT in order to prevent the spread of loose radiological contamination and to prevent personnel radiological contamination.**

5. **Debris items may contain liquid which could result in the spread of radiological contamination or potential personnel injury due to unstable solutions such as acids.**

6. **Flying debris from cutting tools (e.g., nibbler) may occur and personnel are to remain at a safe distance (approximately 10 ft or more) from the cutting activity or wear the appropriate PPE (face and eye protection) to prevent personnel injury.**

NOTE *Size reduction by cutting, drilling, or removing parts of the debris may be necessary in order to access liquid.*

[G] **SIZE** reduce the TRU debris using the appropriate cutting tools as directed by supervision, an RCT, and the RWP.

[H] **ENSURE** that the size reduced TRU debris is covered (e.g., fire-retardant plastic and tape) in order to contain radiological contamination and to mitigate sharp edges.

[I] **REMOVE** the debris from the RP SME-approved localized contamination control enclosure.

5. INSTRUCTIONS—OVERSIZED CONTAINER REMEDIATION (continued)

NOTE *The following step provides a method for tracking the layers of confinement placed into a daughter waste container in order to document the highest layer of confinement placed inside of a daughter waste container. Appendix 2, TRU Waste Container Inner Package Confinement Layer Worksheet, is not a record.*

[J] **DETERMINE** the number of layers of confinement around the TRU debris, and **CHECK** (√) the applicable box on Appendix 2.

[K] **IF** there are greater than six layers of confinement around the TRU debris,
THEN:

[a] **STOP** the waste processing.

[b] **NOTIFY** supervision and the LTP-OCP Operations Manager of the discrepancy and **REQUEST** the applicable actions.

[L] **IF** a Bolas Grande was decontaminated,
THEN:

[a] **REQUEST** that an RCT perform the radiological measurements (both internally and externally to the Bolas Grande) in accordance with the survey point map.

[b] **PROVIDE** a copy of the completed survey point map to the LTP-OCP Operations Manager or designee and WM-SVS and **REQUEST** a determination whether the Bolas Grande satisfies the requirements as an SCO in accordance with EP-TD-2204, Requirements Document for Radiological Characterization of Surface Contaminated Objects at LANL and satisfies LLW criteria (i.e., less than 100 nCi/gm).

[c] **WHEN** the SCO determination is complete,
THEN FORWARD a copy of the SCO determination to applicable supervisor or designee.

5. INSTRUCTIONS—OVERSIZED CONTAINER REMEDIATION (continued)

[d] **IF** the Bolas Grande satisfies the SCO requirements,
THEN:

1. **PACKAGE** the Bolas Grande in accordance with the applicable Waste Disposal Request (WDR) packaging specification (e.g., wrap the SCO with Heat Shrink Wrap™ or equivalent) as directed by supervision and a WPC, as necessary.

NOTE *The Bolas Grande may be placed into a container inside of a contamination area or with the assistance of an RCT the Bolas Grande may be removed from the contamination area and placed into a container outside of a contamination area.*

2. **MOVE** (e.g., out of the SSSR AREA) and **PACKAGE** the Bolas Grande as directed by the LTP-OCP Shift Operations Manager or LTP-OCP Operations Manager and with the assistance of an RCT.

NOTE *Labels are generated as part of performing the WCATS desktop remediation application.*

3. **OBTAIN** a container LLW label.

4. **ENSURE** that a LLW label has been applied to the package.

NOTE *The collection of acceptable knowledge documentation is in order to support the disposition of the SCO at the offsite Treatment, Storage, and Disposal Facility (TSDF).*

5. **PROVIDE** acceptable knowledge documentation (e.g., photographs, waste description, and the presence or absence of liquids) to the LTP-OCP Operations Manager or designee.

6. **GO** to Step 5.[52].

[d] **IF** the Bolas Grande does **NOT** satisfy the SCO requirements,
AND DIRECTED by supervision to continue decontamination activities,
THEN GO to Step 5.[49][B][d].

[M] **PLACE** the TRU debris into a TRU daughter waste container (e.g., SWB or 55-gal drum), minimizing void spaces within the TRU daughter waste container (e.g., SWB or 55-gal drum) and **RECORD** the TRU daughter waste container number on Appendix 2.

5. INSTRUCTIONS—OVERSIZED CONTAINER REMEDIATION (continued)

WARNING

Plastic bags and contamination control packaging SHALL not be opened outside of an RP SME-approved localized contamination control enclosure to prevent the exposure of personnel to radiological hazards.

[50] **IF** a plastic bag is present,
THEN:

[A] **EVALUATE** whether the contents of the plastic bag, without opening the plastic bag, include any prohibited items (e.g., liquid, sealed container, pressurized item, or SAC 5.7.12 non-compliant containers).

NOTE *Sealed containers with bolted lids/flanges are not compliant with the requirements of SAC 5.7.12 but may be remediated inside of an SSSR PROCESS AREA contamination control enclosure in accordance with SAC 5.7.18.*

[B] **IF** the plastic bag contains a SAC 5.7.18 compliant sealed container,
THEN DISPOSITION the SAC 5.7.18 compliant sealed container in accordance with Step 5.[36].

CS **NOTE** ***(*)*** *Aerosol cans from multiple oversized containers may be placed into the same Prohibited Item Collection Container. (NCS-CSLA-13-001)*

CS **NOTE** ***(*)*** *Daughter containers and liquid waste may only contain waste from a single Bolas Grande. There are no exceptions for debris contained in a vacuum system used for contamination control or aerosol cans. (NCS-CSLA-14-016)*

[C] **IF** an aerosol can is present in a plastic bag,
THEN:

[a] **OPEN** the plastic bag inside of an RP SME-approved localized contamination control enclosure (e.g., glovebag) and **REMOVE** the aerosol can.

5. INSTRUCTIONS—OVERSIZED CONTAINER REMEDIATION (continued)

NOTE *Removing the external radiological contamination removes the MAR from the item and thus eliminates the need to track the PE-Ci value and the FGE value of the item.*

[b] **DECONTAMINATE** (as much as possible) the aerosol can by wiping down with Kimwipes® or equivalent or **CONTAIN** any radiological contamination, as directed by the RCT.

NOTE *Item Identification labels are generated as part of performing the WCATS desktop remediation application.*

[c] **OBTAIN** a container Item Identification Number, and **RECORD** the Item ID number in the Comments section of Attachment 1.

[d] **PLACE** a preprinted Item ID Number label on the aerosol can.

[e] **PLACE** the aerosol can into a Prohibited Item Collection Container.

NOTE *The WMC may be notified at a time that is operationally convenient.*

Supervisor

[f] **NOTIFY** the WMC of items found.

Waste Handling Operator

[g] **ENSURE** that the container Item Identification Number is placed on the drum.

[h] **ENSURE** that the Prohibited Item Collection Container hazardous waste label accumulation start date reflects the date provided by the WMC.

NOTE *The hazardous waste label may need to be replaced to ensure that all information is added and legible.*

[i] **ENSURE** that all applicable EPA codes from the associated oversized container are on the hazardous waste label for the Prohibited Item Collection Container, as applicable.

[j] **TEMPORARILY CLOSE** the Prohibited Item Collection Container or **PERMANENTLY CLOSE** the Prohibited Item Collection Container in accordance with EP-AREAG-WO-DOP-1069.

[k] **PLACE** the plastic bag in the daughter container.

5. INSTRUCTIONS—OVERSIZED CONTAINER REMEDIATION (continued)

[D] **IF** a prohibited item is present in a plastic bag (e.g., liquid, sealed container, pressurized item, or SAC 5.7.12 non-compliant containers),
OR the contents of a plastic bag **CANNOT** be positively determined,
AND the plastic bag **CANNOT** be remediated in a glovebag,
THEN:

NOTE *Removing the external radiological contamination removes the MAR from the item and thus eliminates the need to track the PE-Ci value and the FGE value of the item.*

[a] **DECONTAMINATE** (as much as possible) the plastic bag by wiping down with Kimwipes® or equivalent or **CONTAIN** any radiological contamination, as directed by the RCT.

[b] **PLACE** the plastic bag into an empty Prohibited Item Collection Container.

[c] **WHEN** all of the plastic bags with prohibited items or the contents that **CANNOT** be verified have been placed into the daughter waste container, **THEN CLOSE** the daughter waste container in accordance with EP-AREAG-WO-DOP-1069.

[E] **IF** a prohibited item is present in a plastic bag (e.g., liquid, sealed container, pressurized item, or SAC 5.7.12 non-compliant containers),
OR the contents of a plastic bag **CANNOT** be positively determined,
THEN:

[a] **PLACE** the plastic bag into an RP SME-approved localized contamination control enclosure.

[b] **OPEN** the plastic bag.

[c] **IF** prohibited items (e.g., liquid, sealed container, pressurized item, or SAC 5.7.12 non-compliant container) are present in the plastic bag, **THEN INITIATE** the appropriate actions identified for the prohibited items described in the applicable steps of this procedure.

[d] **REMOVE** the plastic bag and items from the RP SME-approved localized contamination control enclosure.

5. INSTRUCTIONS—OVERSIZED CONTAINER REMEDIATION (continued)

NOTE *The following step provides a method for tracking the layers of confinement placed into a daughter waste container in order to document the highest layer of confinement placed inside of a daughter waste container. Appendix 2 is not a record.*

[F] **DETERMINE** the number of layers of confinement around item, and **CHECK** (√) the applicable box on Appendix 2.

CS **NOTE 1** ***(*)*** *Only the contents of a single oversized container may be placed into a daughter waste container in order to ensure compliance with the criticality safety requirements and MAR inventory requirements. (NCS-CSLA-13-001 and NCS-CSLA-14-016)*

CS **NOTE 2** ***(*)*** *Aerosol cans from multiple oversized container may be placed into the same Prohibited Item Collection Container. (NCS-CSLA-13-001)*

CS **NOTE** ***(*)*** *Daughter containers and liquid waste may only contain waste from a single Bolas Grande. There are no exceptions for debris contained in a vacuum system used for contamination control or aerosol cans. (NCS-CSLA-14-016)*

[G] **PLACE** the plastic bag and contents in the appropriate waste container and **RECORD** the TRU daughter waste container number or Prohibited Item Collection Container number on Appendix 2:
- Daughter waste container
- Prohibited Item Collection Container

NOTE *Fixatives and misting of the soil may be used in order to reduce the potential for airborne radiological contamination.*

[51] **IF** TRU Soils are present in the oversized container,
THEN:

[A] **CAREFULLY TRANSFER** loose TRU soils into a daughter 55-gal drum as directed by supervision (e.g., using a HEPA vacuum).

[B] **CAREFULLY TRANSFER** containerized TRU soils into a daughter 55-gal drum in the original container.

[C] **DETERMINE** the number of layers of confinement around the TRU soils and **CHECK** (√) the applicable box on Appendix 2.

5. INSTRUCTIONS—OVERSIZED CONTAINER REMEDIATION (continued)

CS

NOTE ***(*)*** *Daughter containers and liquid waste may only contain waste from a single Bolas Grande. There are no exceptions for debris contained in a vacuum system used for contamination control or aerosol cans. (NCS-CSLA-14-016)*

[52] **ENSURE** that any waste material that may have fallen onto the floor (fire-retardant plastic sheeting) has been retrieved and placed into an appropriate (TRU or oversized container disposal container) daughter waste container (e.g., SWB or 55-gal drum), as necessary.

[53] **IF** directed by supervision or an RCT,
THEN FOLD the fire-retardant plastic sheeting that was laid on the floor and **PLACE** the fire-retardant plastic sheeting into a TRU daughter waste container (e.g., SWB or 55-gal drum).

NOTE *Steps 5.[54] through 5.[57] may be performed in any order and out of sequence in order to allow for the disposition of PPE as operationally necessary.*

[54] **IF** PPE came in contact with the hazardous waste,
THEN REMOVE the PPE and **PLACE** the PPE into a TRU daughter waste container (e.g., SWB or 55-gal drum), if possible.

[55] **IF** PPE that came in contact with the hazardous waste **CANNOT** be placed into a TRU daughter waste container,
THEN PACKAGE the PPE into a container in accordance with guidance from the WMC.

[56] **IF** there is PPE that came in contact with hazardous waste from the previous oversized container,
AND the RCRA Hazardous Waste Codes associated with the previous oversized container are included in the RCRA Hazardous Waste Codes of the current TRU daughter waste container (e.g., SWB or 55-gal drum),
THEN PLACE the PPE into a current TRU daughter waste container (e.g., SWB or 55-gal drum), if possible.

5. INSTRUCTIONS—OVERSIZED CONTAINER REMEDIATION (continued)

[57] **IF** there is PPE that came in contact with hazardous waste from the previous oversized container,
AND the RCRA Hazardous Waste Codes associated with the previous oversized container are **NOT** included in the RCRA Hazardous Waste Codes of the current TRU daughter waste container (e.g., SWB or 55-gal drum),
THEN ENSURE that the PPE has been packaged into a container in accordance with guidance from the WMC.

[58] **ENSURE** that the ventilation flange have been removed from the oversized container hole.

NOTE 1 *Steps 5.[59] through 5.[60] may be performed concurrently or in any sequence.*

NOTE 2 *Steps 5.[59] through 5.[62] may be performed as necessary to allow for the closing and removal of individual TRU daughter waste containers from the SSSR process area (e.g., PermaCon) as the individual TRU daughter waste containers are filled.*

[59] **ENSURE** that the TRU daughter waste containers (e.g., SWB or 55-gal drum) and prohibited item collection containers are closed in accordance with EP-AREAG-WO-DOP-1069.

Supervision

[60] **($) IF** another oversized container is **NOT** to be remediated,
THEN SECURE the STATIONARY FIRE WATCH, and **DOCUMENT** on Attachment 1. (SAC 5.7.17)

NOTE *The following step may be performed out of sequence.*

Waste Handling Operator

[61] **ENSURE** that the applicable WCATS desktop remediation application (e.g., 412-REMED) has been completed and the all-in-one labels generated and that the TRU daughter waste containers (e.g., SWB or 55-gal drum) have been labeled in accordance with EP-DIV-DOP-20043, LTP TRU Waste Container Labeling.

5. INSTRUCTIONS—OVERSIZED CONTAINER REMEDIATION (continued)

NOTE 1 *A separate copy of the applicable page of Attachment 1 is to be used for each LLW and TRU waste container in order to document the waste container information.*

NOTE 2 *The following step may be performed out of sequence.*

[62] **DOCUMENT** the following TRU daughter waste container information on the applicable page of Attachment 1:

- Waste container unique identifiers
- **CHECK** (√) the type of waste container or **RECORD** the daughter waste container type.
- Weights
- Scale information
- TRU Daughter container information
- TRU Daughter container content description
- Performer name, signature, Z number and date
- Closure date
- Highest layer of confinement placed inside of the daughter waste containers as indicated on Appendix 2.

NOTE *Individual closed TRU daughter waste containers and the associated absorbed liquid may be removed from the SSSR AREA as the individual TRU daughter waste containers are closed. The TRU daughter waste containers may be removed provided the WCATS remediation task that moves waste into these daughters has been completed with the remaining waste in the parent waste container represented on that task using a Bypass container.*

[63] **IF** TRU containers are to be moved out of the SSSR process area (e.g., PermaCon), **AND** all of the parent waste container in the batch has **NOT** been remediated, **THEN PERFORM** <u>one</u> of the following:

NOTE *The following step adds the PE-Ci value of the TRU containers to the <u>staged in closed containers</u> value [LCO 3.1.1(2)] in the WCATS database and performs SR 4.1.1.2 in order to demonstrate compliance with LCO 3.1.1(2).*

[A] **($) MOVE** the closed TRU containers and the associated absorbed liquid out of the SSSR process area (e.g., PermaCon) into the SSSR staging area using the WCATS INTRA-FACILITY TRANSFER function (Grid X of STAGE and Grid Y of STAGE). (SR 4.1.1.2)

5. INSTRUCTIONS—OVERSIZED CONTAINER REMEDIATION (continued)

NOTE *The following step moves the closed TRU containers out of the SSSR process area (e.g., PermaCon) while keeping the PE-Ci value of the TRU daughter waste containers as an in-process value [LCO 3.1.1(1)] in the WCATS database.*

[B] **MOVE** the closed TRU containers and the associated absorbed liquid into the SSSR AREA outside of the SSSR process area (e.g., PermaCon) using the WCATS INTRA-FACILITY TRANSFER function (Grid X of IN-PROCESS and Grid Y of STAGE).

[64] **WHEN** all of the oversized container material and TRU waste from the oversized container have been remediated,
THEN:

CS

[A] **(*) VERIFY** that there are no parent or daughter waste containers nor are there any shavings or chips from a size reduction (e.g., HEPA vacuum contents) of pencil tanks from waste containers 3440, 92554, 92353, or 68109 within the SSSR process area (e.g., PermaCon). (NCS-CSLA-13-001 and NCS-CSLA-14-016)

CS

[B] **ENSURE** that all TRU waste [e.g., the TRU daughter waste containers (55-gal drums and SWBs) and absorbed liquid] are moved out of the SSSR process area (e.g., PermaCon). (NCS-CSLA-13-001 and NCS-CSLA-14-016)

[65] **RECORD** the date and approximate time that the oversized container remediation was completed on Attachment 1.

NOTE *The Hazardous Waste Codes for the daughter container must be updated for hazardous waste items identified during the remediation of a parent waste container that were not previously identified and the hazardous waste is placed into a daughter container. Additionally, the Hazardous Waste Code for hazardous waste that is remediated or not placed into a daughter waste container is not carried forward to the daughter waste container. The WMC can assist with assigning the appropriate RCRA Hazardous Waste Codes to the daughter container.*

[66] **IF** LLW (e.g., oversized container material) is to be shipped to the NNSS,
THEN ENSURE that a WPC is present to observe the packaging of the LLW.

5. INSTRUCTIONS—OVERSIZED CONTAINER REMEDIATION (continued)

CS **NOTE 1** ***(*)*** *Debris contained in the vacuum systems for contamination control and oversized container material from multiple oversized containers may be placed into a single daughter container (e.g., LB99 or B-25). (NCS-CSLA-13-001)*

CS **NOTE 2** ***(*)*** *Daughter containers and liquid waste may only contain waste from a single Bolas Grande. There are no exceptions for debris contained in a vacuum system used for contamination control or aerosol cans. (NCS-CSLA-14-016)*

NOTE 3 *Oversized container disposal containers are not required to be closed in accordance with the manufacturer's instructions if being used for disposal of additional oversized container material.*

NOTE 4 *Steps 5.[67] through 5.[71] may be performed as necessary and out-of-sequence in order to permit the disposition of oversized container disposal containers as the containers are filled or no longer needed.*

[67] **ENSURE** that the oversized container material with less than or equal to 50,000 dpm / 100 cm^2 alpha contamination except for an FRP base used to support the SCO glovebox has been placed in a oversized container disposal container under the direction of a WPC, as applicable.

[68] **CLOSE** the oversized container disposal container in accordance with the RCT and WMC instructions.

NOTE 4 *A separate copy of Attachment 5, LTP LLW/MLLW Container Data Sheet, is used for each LLW/MLLW container.*

[69] **IF** LLW (e.g., SCO gloveboxes) is to be shipped to the NNSS,
THEN:

[A] **RECORD** the waste container and physical/chemical characterization information on Attachment 5.

[B] **DOCUMENT** the prohibited/restricted item status and RCRA characterization information on Attachment 5.

5. INSTRUCTIONS—OVERSIZED CONTAINER REMEDIATION (continued)

CS **NOTE 1** ***(*)*** *Debris contained in the vacuum systems for contamination control and oversized container material from multiple oversized containers may be placed into a single daughter container (e.g., LB99 or B-25). (NCS-CSLA-13-001)*

CS **NOTE 2** ***(*)*** *Daughter containers and liquid waste may only contain waste from a single Bolas Grande. There are no exceptions for debris contained in a vacuum system used for contamination control or aerosol cans. (NCS-CSLA-14-016)*

[70] **IF** the oversized container disposal container or prohibited item collection containers are to be reused,
THEN STAGE the oversized container disposal container as directed by supervision.

[71] **IF** the oversized container disposal container or prohibited item collection containers are FULL <u>or</u> **NOT** to be reused,
THEN:

[A] **TRANSFER** the full oversized container disposal container or prohibited item collection containers to a designated location outside of the SSSR process area using the WCATS INTRA-FACILITY TRANSFER function (Grid X of IN-PROCESS and Grid Y of STAGE).

[B] **ENSURE** that the oversized container disposal container or prohibited item collection have been labeled in accordance with P930-1, LANL Waste Acceptance Criteria.

NOTE *The following step may be performed out of sequence.*

[C] **ENSURE** that the oversized container disposal containers and prohibited item collection containers, as applicable, have been weighed and that the following information is documented on Attachment 1:

- Waste container unique identifiers
- **CHECK** (√) the type of waste container or **RECORD** the daughter waste container type.
- Weights
- Scale information
- LLW Daughter container information
- LLW Daughter container content description
- Performer name, signature, Z number and date
- Attachment 1 page numbering
- Closure date

6. INSTRUCTIONS—LIQUID DISPOSITION

This section is a stand-alone section and may be performed independently of, or in conjunction with other Instructions sections.

NOTE *Radiological surveys may be performed as determined necessary [e.g., by an RP representative (e.g., RCT)] any time during the performance of this procedure.*

Waste Handling Operator

[1] **ENSURE** that radiological contamination surveys are performed as required during the performance of the evolution.

[2] **IF** radiological contamination is detected during the evolution,
THEN FOLLOW the direction of the RCT and RWP to decontaminate or containerize the radiological contamination.

[3] **PERFORM** a pH test on the liquid, and **DOCUMENT** the results in the Comments section of Attachment 1 or Attachment 4, as applicable:
- Acid (less than 7)
- Caustic (base) greater than 7

[4] **NEUTRALIZE** the liquid, as necessary.

[5] **DETERMINE** the approximate volume of liquid and the appropriate liquid collection method, and **DOCUMENT** the approximate liquid volume in the Comments section of Attachment 1 or Attachment 4, as applicable.

NOTE *The liquid to absorbent ratio is approximately 100 to 1 (e.g., 1 gal of liquid to approximately a quarter cup of absorbent).*

[6] **IF** the liquid is in a waste container without a hazardous waste code,
THEN:

[A] **ADD** a sufficient amount of the appropriate absorbent to the liquid and **ENSURE** that all of the liquid is absorbed.

[B] **GO** to Step 6.[11].

6. INSTRUCTIONS—LIQUID DISPOSITION (continued)

WARNING

1. **Not securely closing the wet HEPA vacuum could result in a liquid spill and the potential contamination (e.g., radiological or chemical) of personnel and equipment.**

2. **Only the HEPA vacuum designated for collecting liquid is to be used to collect liquid in order to reduce the possibility of a criticality incident.**

[7] **IF** a wet HEPA vacuum is to be used to collect the liquid,
THEN:

[A] **OBTAIN** a HEPA vacuum designated for liquid collection.

[B] **ENSURE** that a new approved waterproof bag (e.g., plastic bag) has been placed in the wet HEPA vacuum with the edge of the bag folded over the edge of the wet HEPA vacuum canister rim, and that the wet HEPA vacuum has been securely CLOSED.

[C] **POSITION** the wet HEPA vacuum such that the suction hose reaches the liquids in the waste container.

WARNING

Not placing the wet HEPA vacuum on a flat-stable surface could result in a liquid spill and the potential contamination (e.g., radiological or chemical) of personnel and equipment.

[D] **ENSURE** that the wet HEPA vacuum is placed on a flat-stable surface inside of a catch pan in order to prevent the wet HEPA vacuum from generating excessive vibrations or movement.

[E] **ENSURE** that the wet HEPA vacuum power cord is connected to a 110 Vac GFCI power source.

[F] **START** the wet HEPA vacuum.

6. INSTRUCTIONS—LIQUID DISPOSITION (continued)

WARNING

Adding too much liquid to the waterproof bag (e.g., plastic bag) could result in all of the liquid not being absorbed or the spilling of the liquid and the potential contamination (e.g., radiological or chemical) of personnel and equipment.

NOTE 1 *A flashlight may be necessary in order to see the liquid in a waste container or waste item within the waste container.*

NOTE 2 *Attachments for the suction hose may be used as necessary in order to reach all of the liquid.*

NOTE 3 *Addition of absorbent will increase the volume of the material by approximately 5%.*

[G] **SUCTION** out the liquid from the waste container using the wet HEPA vacuum.

WARNING

Overfilling the wet HEPA vacuum with liquid may result in the liquid spraying out of the wet HEPA vacuum and potential contaminating (e.g., radiological or chemical) personnel and equipment.

[H] **WHEN** all of the liquid has been removed from the waste container,
OR the waterproof bag (e.g., plastic bag) contains approximately 5-gal,
THEN STOP the wet HEPA vacuum.

[I] **IF** there is liquid remaining in the waste container,
THEN:

[a] **CAREFULLY REMOVE** the full waterproof bag (e.g., plastic bag) from the wet HEPA vacuum with the assistance of an RCT, and temporarily seal the full waterproof bag (e.g., plastic bag).

[b] **PLACE** the full waterproof bag (e.g., plastic bag) in a receiving waste container (e.g., 5-gal pail).

6. INSTRUCTIONS—LIQUID DISPOSITION (continued)

NOTE *The liquid to absorbent ratio is approximately 100 to 1 (e.g., 1 gal of liquid to approximately a quarter cup of absorbent).*

[c] **ADD** a sufficient amount of absorbent to the liquid in the waterproof bag (e.g., plastic bag) and receiving waste container (e.g., 5-gal pail), as applicable, and **ENSURE** that all of the liquid is absorbed.

[d] **GO** to Step 6.[7][A].

[J] **WHEN** all of the liquids have been removed from the waste container, **THEN:**

[a] **CAREFULLY REMOVE** the waterproof bag (e.g., plastic bag) from the vacuum with the assistance of an RCT, and temporarily seal the waterproof bag (e.g., plastic bag).

[b] **PLACE** the waterproof bag (e.g., plastic bag) in a receiving waste container (e.g., 5-gal pail).

NOTE *The liquid to absorbent ratio is approximately 100 to 1 (e.g., 1 gal of liquid to approximately a quarter cup of absorbent).*

[c] **ADD** a sufficient amount of the appropriate absorbent to the liquid in the waterproof bag (e.g., plastic bag) and receiving waste container (e.g., 5-gal pail), as applicable, and **ENSURE** that all of the liquid is absorbed.

[d] **STORE** the wet HEPA vacuum as appropriate.

[K] **GO** to Step 6.[10].

6. INSTRUCTIONS—LIQUID DISPOSITION (continued)

NOTE *Because of the way a peristaltic pump works it will not be able to remove all of the liquid. Once the suction tubing begins to draw air into the tubing the pump suction will be lost and the pump will not be able to pump anymore liquid.*

Operator

[8] **IF** a peristaltic pump is to be used to collect the liquid,
THEN:

[A] **POSITION** the peristaltic pump and receiving waste container (e.g., 5-gal pail) such that the tubing reaches from the liquid source to the receiving waste container (e.g., 5-gal pail).

[B] **ENSURE** that the peristaltic pump is placed on a flat-stable surface to prevent the pump from generating excessive vibrations or movement.

[C] **PLACE** the suction end of the tubing into the bottom of the liquid.

WARNING

Not securing the discharge end of the tubing to the receiving waste container or placing the receiving waste container on a flat-stable surface could result in a liquid spill and the potential contamination (e.g., radiological or chemical) of personnel and equipment.

[D] **PLACE** the receiving waste container on a flat-stable surface.

[E] **PLACE** the discharge end of the tubing into the receiving waste container, and **SECURE** the tube to the receiving waste container (e.g., bungee cord).

[F] **ENSURE** that the peristaltic pump power cord is connected to a 110 Vac GFCI power source.

6. INSTRUCTIONS—LIQUID DISPOSITION (continued)

WARNING

Absorbent is to be added to the receiving waste container in order to absorb the liquid therefore adding too much liquid to the receiving waste container could result in <u>not</u> all of the liquid being absorbed <u>or</u> the spilling of the liquid and the potential contamination (e.g., radiological or chemical) of personnel and equipment.

[G] **START** the peristaltic pump.

[H] **WHEN** all of the liquid has been removed,
OR the peristaltic pump suction is lost,
OR the receiving waste container has reached the acceptable limit (e.g., sufficient room in the receiving waste container to absorb the liquid),
THEN STOP the peristaltic pump.

[I] **IF** another receiving waste container is needed,
THEN:

[a] **DETERMINE WHETHER** a sufficient amount of absorbent can be added to the liquid in order to absorb all of the liquid without causing the receiving waste container contents to spill out of the receiving waste container.

[b] **IF** a sufficient amount of absorbent **CANNOT** be added to the receiving waste container in order to absorb all of the liquid,
THEN CAREFULLY PUMP a portion of the liquid, using the peristaltic pump, into another receiving waste container (e.g., 5-gal pail).

[c] **ADD** a sufficient amount of the appropriate absorbent to the liquid in the receiving waste containers, and **ENSURE** that all of the liquid is absorbed.

[d] **OBTAIN** another receiving waste container.

[e] **GO TO** Step 6.[9][E].

[J] **IF** there is liquid remaining that **CANNOT** be removed by the peristaltic pump,
THEN NOTIFY supervision and **REQUEST** the applicable actions.

6. INSTRUCTIONS—LIQUID DISPOSITION (continued)

[K] **WHEN** all of the liquid has been removed,
THEN:

[a] **UNPLUG** the peristaltic pump from the power source.

[b] **REMOVE** the tubing from the peristaltic pump.

[c] **DRAIN** the peristaltic pump tubing into a receiving waste container with absorbent, and **PLACE** the peristaltic pump tubing into the daughter waste container.

[d] **STORE** the peristaltic pump as appropriate.

[L] **GO** to Step 6.[10].

[9] **CAREFULLY REMOVE** as much of the liquid as possible using a hand-operated suction device (e.g., syringe or baster), and **DISCHARGE** the liquid into a collection container (e.g., plastic bag).

[10] **ENSURE** that a sufficient amount of the appropriate absorbent has been added to the liquid ensuring that all of the liquid is absorbed.

CS [11] **(*) ENSURE** that the absorbed liquid is placed inside of a daughter waste container (e.g., SWB or 55-gal drum) associated with the parent waste container. (NCS-CSLA-13-001 and NCS-CSLA-14-016)

7. INSTRUCTIONS—SECURING ENCLOSURE WITH IN-PROCESS WASTE CONTAINER

This section is a stand-alone section and may be performed independently of, or in conjunction with other Instruction sections of this procedure.

This section must be performed any time that an in-process waste container (e.g., oversized container or SWB) is to be left unattended inside of the contamination control enclosure for an extended period of time such as at the end of a shift when the in-process waste container is to be left unattended overnight.

NOTE *Radiological surveys may be performed as determined necessary [e.g., by an RP representative (e.g., RCT)] any time during the performance of this procedure.*

Waste Handling Technician

[1] **ENSURE** that waste material removed from the waste container (e.g., oversized container or SWB) has been placed into a daughter waste container or is contained in accordance with RCT direction.

[2] **ENSURE** that loose waste material from the oversized container remediation process (e.g., sawdust, shavings, Kimwipes®, or oversized container material) has been placed in the appropriate waste container [e.g., metal box (LB99)] and that the waste container has been closed.

[3] **ENSURE** that open waste containers have been closed (may be a temporary configuration for a waste container to be reopened).

[4] **ENSURE** that the open portions of the oversized container have been secured as directed by an RCT in order to minimize the spread of radiological contamination (e.g., covering the FRP with fire-retardant plastic or spraying fixative on the exposed waste), as applicable.

NOTE TRU waste <u>outside</u> of a container is considered exposed, and a *STATIONARY FIRE WATCH* is required in an SSSR process area *(e.g., PermaCon)* when TRU waste is exposed. (SAC 5.7.17) TRU waste that is covered by a fire blanket or other fire retardant material is considered sufficiently protected from a fire and is not considered exposed.

[5] **($) ENSURE** that <u>one</u> of the following has been performed, and **DOCUMENT** on Attachment 1, TA-54 Area G TRU Oversized Container Remediation Data Sheet, or Attachment 4, TA-54 Area G SWB/Daughter Waste Container Remediation Data Sheet, as applicable: (SAC 5.7.17)

[A] **ENSURE** that all exposed waste material has been covered by a fire blanket or other fire retardant material.

7. INSTRUCTIONS—SECURING ENCLOSURE WITH IN-PROCESS WASTE CONTAINER (continued)

[B] **ENSURE** that a STATIONARY FIRE WATCH has been established inside of the SSSR process area (e.g., PermaCon).

[6] **ENSURE** that all equipment used to remediate the waste container have been placed in a safe condition (e.g., electrical equipment deenergized and unplugged), as applicable.

[7] **NOTIFY** the TA-54 Operations Center of the waste container and contamination control enclosure status (e.g., oversized container is partially remediated and has been placed in a safe condition to minimize the spread of radiological contamination) and **REQUEST** the TA-54 Operations Center notify an Environmental Professional of the waste container status.

[8] **VERIFY** that the following applicable air movers are ON and that the applicable HEPA filter DP reading for each air mover is within the required range, and **DOCUMENT** the results on Attachment 1 or 4, as applicable:

Facility	Air Mover	Required HEPA DP (in. wc)
Dome TA-54-231 PermaCon	AM-01	≥ 0.5 to ≤ 2.5
	AM-02	
	AM-03	
	AM-08	
Building TA-54-412 Enclosure	AM-01	≥ 0.5 to ≤ 3.5
	AM-02	
	AM-03	
Dome TA-54-375 PermaCon	PDI-003	≥ 1.0 to ≤ 2.5
	PDI-004	

[9] **($) VERIFY** that all combustible/flammable liquids are removed from the SSSR AREA and associated CRA <u>or</u> are ATTENDED, and **DOCUMENT** on Attachment 1 or 4, as applicable. (LCO 3.3.1)

8. INSTRUCTIONS—SWB/DAUGHTER WASTE CONTAINER REMEDIATION

This section is a stand-alone section and may be performed independently of, or in conjunction with other Instruction sections of this procedure.

NOTE 1 *Visual examination (VE) of waste container contents is to be performed by CCP personnel in accordance with CCP-TP-113, CCP Standard Contact-Handled Waste Visual Examination, and this procedure.*

NOTE 2 *RCT support **SHALL** be obtained at any time to perform radiological surveys as necessary during waste container activities. Operators **SHALL** follow RCT direction.*

NOTE 3 *The applicable WCATS desktop remediation application (e.g., 412-REMED) is performed concurrently with this section.*

Waste Handling Operator

[1] **ENSURE** that all prerequisites actions have been completed.

CS [2] **(*) ENSURE** that all TRU waste [e.g., the TRU daughter waste containers (e.g., 55-gal drums and SWBs), and absorbed liquids] have been moved out of the SSSR process area (e.g., PermaCon). (NCS-CSLA-13-001 and NCS-CSLA-14-016)

NOTE *The following step may be repeated as necessary during the waste container remediation process until all of the waste container contents have been remediated.*

[3] **ENSURE** that the new TRU daughter waste containers (e.g., 55-gal drums and SWBs) to be used to collect waste from the waste container being remediated have been moved into the SSSR process area (e.g., PermaCon), as necessary.

NOTE *The following step adds the PE-Ci value of the waste drums to the in-process waste container value in the WCATS database and performs SR 4.1.1.1 in order to demonstrate compliance with LCO 3.1.1.(1). The following step is performed before physically moving the waste drums into the SSSR process area (e.g., PermaCon).*

[4] **($) IF** moving a TRU waste container into the Dome TA-54-231 PermaCon, TA-54-375 PermaCon, or TA-54-412 contamination enclosure (tent),
THEN ENSURE that the WCATS INTRA-FACILITY TRANSFER has been completed using a WCATS mobile device or WCATS desktop application. (SR 4.1.1.1)

8. INSTRUCTIONS—SWB/DAUGHTER WASTE CONTAINER REMEDIATION (continued)

CS

[5] **(*) VERIFY** that there are no parent or daughter waste containers within any cell of an SSSR process area (e.g., PermaCon) that the TRU waste container is to be moved through. (NCS-CSLA-13-001 and NCS-CSLA-14-016)

NOTE *The following step ensures that the waste drums have been physically moved into the SSSR process area (e.g., PermaCon).*

CS

[6] **(*) MOVE** one waste container (SWB with less than or equal to 325 FGE or drum with less than or equal to 200 FGE) into the SSSR process area (e.g., PermaCon). (NCS-CSLA-13-001 and NCS-CSLA-14-016)

[7] **OPEN** the waste container in accordance with EP-AREAG-WO-DOP-1069, TA-54 Area G TRU SWB/Drum Operations.

[8] **IF** items are to be removed from the waste container,
THEN ESTABLISH one radiological contamination control surface (e.g., fire-retardant plastic sheeting) location (not to exceed a volume equivalent to approximately 3 ft x 3 ft x 3 ft or 27 ft^3) for staging the waste container contents as directed by a RCT.

[9] **IF** VE activities are to occur during the waste container inspection,
THEN ENSURE that CCP-TP-113 is performed concurrently with this procedure.

NOTE *Steps 8.[10] through 8.[16] are performed repeatedly until the inspection/remediation of the waste container contents is completed.*

[10] **ENSURE** that radiological contamination/radiation surveys are performed on each item within the waste container to be handled.

8. INSTRUCTIONS—SWB/DAUGHTER WASTE CONTAINER REMEDIATION (continued)

WARNING

Minimize the number of items within the waste container that are removed or rearranged to those items necessary to remediate the waste container in order to reduce the potential of radiological contamination and radiation exposure to personnel.

[11] **REMOVE** or **REARRANGE** items within the waste container, as necessary, to allow an inspection of the entire waste container contents or the disposition of prohibited items as directed by an RCT.

[12] **PLACE** items removed from a waste container on a radiological contamination control surface.

[13] **VISUALLY INSPECT** the contents of the waste container for prohibited items, as necessary.

8. INSTRUCTIONS—SWB/DAUGHTER WASTE CONTAINER REMEDIATION (continued)

CS **NOTE 1** ***(*)*** *Only the contents of a single waste container may be placed into a collection container in order to ensure compliance with MAR inventory and criticality safety requirements. (NCS-CSLA-13-001 and NCS-CSLA-14-016)*

NOTE 2 *Prohibited items removed from the waste container are placed into a collection container and documented on Attachment 4.*

NOTE 3 *Pressurized cylinders and aerosol cans* ***SHALL*** *be placed in separate collection containers (e.g., one collection container for cylinders and a separate collection container for aerosol cans).*

CS **NOTE 4** ***(*)*** *Aerosol cans from multiple waste containers may be placed into the same Prohibited Item Collection Container. (NCS-CSLA-13-001)*

CS **NOTE 5** ***(*)*** *Daughter containers and liquid waste may only contain waste from a single Bolas Grande. There are no exceptions for debris contained in a vacuum system used for contamination control or aerosol cans. (NCS-CSLA-14-016)*

[14] **IF** a SAC 5.7.12 non-compliant container (i.e., metal or glass containers with a positive mechanical locking mechanism, such as a screw-on lid, or a metal locking, bolted, or snap-on lid) is discovered inside of the waste container,
THEN:

[A] **STOP** work.

[B] **NOTIFY** supervision and the TA-54 Operations Center of the discrepancy and **REQUEST** the applicable actions.

8. INSTRUCTIONS—SWB/DAUGHTER WASTE CONTAINER REMEDIATION (continued)

WARNING

Glass sample vials may contain residual granular materials which can generate sparks when subjected to mechanical agitation. To reduce the possibility of breaking a glass sample vial and the generation of sparks, glass sample vials SHALL be handled with care and void volume reduction activities SHALL be performed without excessive force. (EP-DIV-REPORT-09)

NOTE 1 *Do not crush any containers. Deformation of containers or container lids is allowable to aid in lid removal, as necessary, and help verify during RTR examination the container is not sealed.*

CS **NOTE 2** ***(*)*** *Only the contents of a single waste container may be placed into a daughter waste container in order to ensure compliance with the criticality safety requirements and the MAR inventory requirements. (NCS-CSLA-13-001 and NCS-CSLA-14-016)*

NOTE 3 *Hazardous waste containers with liquids of any amount or configuration that have been solidified (absorbed) are not required to be managed on secondary containment pallets nor are they required to have a FREE LIQUIDS label affixed to the container.*

[15] **IF** a container compliant with SAC 5.7.12 has liquid present,
AND the liquid can be easily removed without mechanical assistance (e.g. HEPA vacuum or peristaltic pump),
THEN:

[A] **PLACE** the container into an RP SME-approved localized containment control enclosure or **BAG-IN** the container into a certified glovebag in accordance with EP-AREAG-WO-DOP-1161, TA-54 Area G TRU Waste Glovebag Operations.

8. INSTRUCTIONS—SWB/DAUGHTER WASTE CONTAINER REMEDIATION (continued)

[B] **ACCESS** the liquid to be removed.

[C] **DOCUMENT** the approximate liquid volume on Attachment 4.

[D] **PERFORM** a pH test on the liquid, and **DOCUMENT** the results on Attachment 4:
- Acid (less than 7)
- Caustic (base) greater than 7

[E] **NEUTRALIZE** the liquid, as necessary.

CAUTION

To eliminate hazards to the glovebag (i.e., table and gloves), use the appropriate absorbing agents and compatible container to absorb the liquids.

[F] **OBTAIN** the appropriate absorbing agent and a compatible container, as applicable.

NOTE *The liquid to absorbent ratio is approximately 100 to 1 (e.g., 1 gal of liquid to approximately a quarter cup of absorbent).*

[G] **IF** the liquid is in a waste container without a hazardous waste code, **THEN:**

[a] **ADD** a sufficient amount of absorbent to the liquid and **ENSURE** that all of the liquid is absorbed.

[b] **GO** to Step 8.[15][J].

[H] **PLACE** the absorbing material in a compatible container.

[I] **TRANSFER** the liquid into the compatible container, as required.

8. INSTRUCTIONS—SWB/DAUGHTER WASTE CONTAINER REMEDIATION (continued)

CS **NOTE** ***(*)*** *Only the contents of a single waste container may be placed into a daughter waste container in order to ensure compliance with MAR inventory and criticality safety requirements. (NCS-CSLA-13-001 and NCS-CSLA-14-016)*

[J] **BAGOUT** the container in accordance with EP-AREAG-WO-DOP-1161, as necessary, and **PLACE** the absorbed liquid in the daughter waste containers.

[16] **IF** a container compliant with SAC 5.7.12 has liquid present,
AND the liquid removal requires mechanical assistance (e.g. HEPA vacuum or peristaltic pump),
THEN:

[A] **PLACE** the container into an RP SME-approved localized containment control enclosure or **BAG-IN** the container into a certified glovebag in accordance with EP-AREAG-WO-DOP-1161.

[B] **ACCESS** the liquid to be removed (e.g., opening access port or fill cap).

[C] **REMOVE** the liquid in accordance with Section 6, Liquid Disposition.

CS **NOTE** ***(*)*** *Only the contents of a single waste container may be placed into a daughter waste container in order to ensure compliance with the criticality safety requirements and MAR inventory requirements. (NCS-CSLA-13-001 and NCS-CSLA-14-016)*

[D] **BAGOUT** the container in accordance with EP-AREAG-WO-DOP-1161, as necessary, and **PLACE** the absorbed liquid in the daughter waste containers.

8. INSTRUCTIONS—SWB/DAUGHTER WASTE CONTAINER REMEDIATION (continued)

[17] **IF** a pressurized item that has **NOT** been punctured or breached is present, **THEN:**

NOTE 1 *Pressurized cylinders and aerosol cans **SHALL** be placed in separate Prohibited Item Collection Containers (e.g., one collection container for cylinders and a separate collection container for aerosol cans).*

CS **NOTE 2** ***(*)*** *Aerosol cans from multiple waste containers may be placed into the same Prohibited Item Collection Container. (NCS-CSLA-13-001)*

CS **NOTE 3** ***(*)*** *Daughter containers and liquid waste may only contain waste from a single Bolas Grande. There are no exceptions for debris contained in a vacuum system used for contamination control or aerosol cans. (NCS-CSLA-14-016)*

[A] **OBTAIN** the Prohibited Item Collection Container, as required.

[B] **PLACE** the Prohibited Item Collection Container in a location as directed by supervision.

[C] **ENSURE** that the following is recorded or checked (√) on Attachment 4:

- Date created
- Pressurized Container/Aerosol Cans/Other [check (√) one]
- Date Item Added
- Parent Container Number
- Parent Container EPA Code, if applicable
- Parent Container Accumulation Start Date or Received Date (non-hazardous waste container)
- Item Description (use trade name e.g., WD-40, paint, as applicable)
- Item Shape
- Item Size
- Item Labeling, if applicable or N/A
- Item Weight (lb)

8. INSTRUCTIONS—SWB/DAUGHTER WASTE CONTAINER REMEDIATION (continued)

NOTE *Removing the external radiological contamination from the pressurized item removes the MAR from the item and thus eliminates the need to track the PE-Ci value and the FGE value of the item.*

[D] **DECONTAMINATE** (as much as possible) the pressurized item by wiping down with Kimwipes® or equivalent or **CONTAIN** any radiological contamination, as directed by the RCT.

NOTE *Item Identification labels are generated as part of performing the WCATS desktop remediation application.*

[E] **OBTAIN** a container Item Identification Number, and **RECORD** the Item ID number on Attachment4.

[F] **PLACE** the Item ID Number label on the pressurized item.

[G] **PLACE** the pressurized item into the Prohibited Item Collection Container.

NOTE *The WMC may be notified at a time that is operationally convenient.*

Supervisor

[H] **NOTIFY** the WMC of items found.

NOTE *Item Identification labels are generated as part of performing the WCATS desktop remediation application.*

Waste Handling Operator

[I] **ENSURE** that the container Item Identification Number is placed on the waste container.

[J] **ENSURE** that the Prohibited Item Collection Container is labeled with a hazardous waste label and accumulation start date.

8. INSTRUCTIONS—SWB/DAUGHTER WASTE CONTAINER REMEDIATION (continued)

NOTE *The hazardous waste label may need to be replaced to ensure that all information is added and legible.*

[K] **ENSURE** that all applicable EPA codes from the associated parent waste container are on the hazardous waste label for the Prohibited Item Collection Container, as applicable.

[L] **ENSURE** that the Prohibited Item Collection Container lid has been placed on the Prohibited Item Collection Container.

[18] **PLACE** TRU waste items removed from the parent waste container for segregation into a daughter waste container (e.g., 55-gal drum) as directed by supervision.

[19] **IF** an item was removed from the waste container being remediated, **THEN ENSURE** that the waste container is CLOSED in accordance with EP-AREAG-WO-DOP-1069, TA-54 Area G TRU SWB/Drum Operations.

CS **NOTE 1** ***(*)*** *Only the contents of a single waste container may be placed into a collection container in order to ensure compliance with the criticality safety requirements and MAR inventory requirements. (NCS-CSLA-13-001 and NCS-CSLA-14-016)*

CS **NOTE 2** ***(*)*** *Aerosol cans from multiple waste containers may be placed into the same Prohibited Item Collection Container. ((NCS-CSLA-13-001)*

CS **NOTE 3** ***(*)*** *Daughter containers and liquid waste may only contain waste from a single Bolas Grande. There are no exceptions for debris contained in a vacuum system used for contamination control or aerosol cans. (NCS-CSLA-14-016)*

[20] **WHEN** the waste container remediation is complete or as directed by supervision, **THEN ENSURE** that waste items removed from the waste container have been placed into the original waste container or alternate waste container.

[21] **ENSURE** that the radiological contamination control surface (e.g., fire-retardant plastic sheeting) area has been removed and dispositioned as directed by supervision and RCT, as necessary.

8. INSTRUCTIONS—SWB/DAUGHTER WASTE CONTAINER REMEDIATION (continued)

[22] **CLOSE** the waste containers in accordance with EP-AREAG-WO-DOP-1069.

[23] **ENSURE** that the applicable WCATS desktop remediation application (e.g., 412-REMED) has been completed and the all-in-one labels generated and that the TRU daughter waste containers (e.g., SWB or 55-gal drum) have been labeled in accordance with EP-DIV-DOP-20043.

NOTE 1 *A separate copy of the applicable page of Attachment 4 is to be used for each LLW and TRU waste container in order to document the waste container information.*

NOTE 2 *The following step may be performed out of sequence.*

[24] **DOCUMENT** the following TRU daughter waste container information on the applicable page of Attachment 4:

- Waste container unique identifiers
- **CHECK** (√) the type of waste container or **RECORD** the daughter waste container type.
- Weights
- Scale information
- TRU Daughter container information
- TRU Daughter container content description
- Performer name, signature, Z number and date
- Closure date
- Highest layer of confinement placed inside of the daughter waste containers as indicated on Appendix 2.
- Attachment 4 page numbering

CS [25] **(*) VERIFY** that there are no-parent or daughter waste containers within any cell of an SSSR process area (e.g., PermaCon) that the TRU waste container is to be moved through. (NCS-CSLA-13-001 and NCS-CSLA-14-016)

8. INSTRUCTIONS—SWB/DAUGHTER WASTE CONTAINER REMEDIATION (continued)

NOTE *Individual closed TRU daughter waste containers and the associated absorbed liquid may be removed from the SSSR AREA as the individual TRU daughter waste containers are closed. The TRU daughter waste containers may be removed provided the WCATS remediation task that moves waste into these daughters has been completed with the remaining waste in the parent waste container represented on that task using a Bypass container.*

CS

[26] **(*) ENSURE** that all TRU waste [e.g., the TRU daughter waste containers (55-gal drums and SWBs) and absorbed liquid] are moved out of the SSSR process area (e.g., PermaCon) in accordance with one of the following methods: (NCS-CSLA-13-001 and NCS-CSED-14-004)

NOTE *The following step adds the PE-Ci value of the TRU daughter waste containers to the staged in closed containers value [LCO 3.1.1(2)] in the WCATS database and performs SR 4.1.1.2 in order to demonstrate compliance with LCO 3.1.1(2).*

[A] **($) MOVE** the closed TRU daughter waste containers and the associated absorbed liquid out of the SSSR process area (e.g., PermaCon) into the SSSR staging area using the WCATS INTRA-FACILITY TRANSFER function (Grid X of STAGE and Grid Y of STAGE). (SR 4.1.1.2)

NOTE *The following step moves the closed TRU daughter waste containers out of the SSSR process area (e.g., PermaCon) while keeping the PE-Ci value of the TRU daughter waste containers as an in-process value [LCO 3.1.1(1)] in the WCATS database.*

[B] **MOVE** the closed TRU daughter waste containers and the associated absorbed liquid into the SSSR AREA outside of the SSSR process area (e.g., PermaCon) using the WCATS INTRA-FACILITY TRANSFER function (Grid X of IN-PROCESS and Grid Y of STAGE).

8. INSTRUCTIONS—SWB/DAUGHTER WASTE CONTAINER REMEDIATION (continued)

[27] **IF** the prohibited item collection containers are to be reused,
THEN STAGE the oversized container disposal container as directed by supervision.

CS

[28] **(*) IF** the prohibited item collection containers are FULL or **NOT** to be reused,
OR items from a Bolas Grande were placed in a prohibited item collection container,
THEN: (NCS-CSLA-14-016)

[A] **TRANSFER** the full prohibited item collection containers to a designated location outside of the SSSR process area using the WCATS INTRA-FACILITY TRANSFER function (Grid X of IN-PROCESS and Grid Y of STAGE).

[B] **ENSURE** that the prohibited item collection containers have been labeled in accordance with P930-1, LANL Waste Acceptance Criteria.

9. POST-PERFORMANCE ACTIVITIES

9.1 Disposition

Waste Handling Operator

[1] **SIGN** and **DATE** the applicable attachments.

Supervisor or designee

[2] **REVIEW** the applicable attachments for accuracy and completeness.

[3] **IF** any deficiencies were identified,
THEN INITIATE actions to correct the deficiency [e.g., Facility Service Request (FSR) System], and **DOCUMENT** the actions taken (e.g., FSR Issue Number) in the Comments section of the applicable attachments.

[4] **SIGN** and **DATE** the applicable attachments, and **ENSURE** that any SCO acceptable knowledge documentation is attached to the applicable attachment.

SOS/SOM or designee

[5] **IF** Attachment 1 or 4 was completed,
THEN:

[A] **REVIEW** the applicable attachments for accuracy and completeness.

[B] **CHECK** (√) YES or NO to indicate whether the applicable acceptance criteria are satisfied on the applicable attachments.

[C] **IF** the applicable acceptance criteria are **NOT** satisfied,
THEN:

[a] **ENSURE** that the applicable TSR actions have been implemented.

[b] **ENSURE** that the actions of EP-DIV-AP-13, WDP TSR-Related Operational Limits Actions Compliance Tracking, have been implemented.

[c] **ENSURE** that the SOM and EWMO-FOD have been notified of the discrepancy.

[D] **PRINT** and **SIGN** name, **RECORD** Z number, and **DATE/TIME** on the applicable attachments.

9.1 Disposition (continued)

NOTE 1 *Support-Services Subcontractors are not required to perform a Post-Job Review.*

NOTE 2 *Completing a Post-Job Review may be accomplished using the applicable P300 form or online (the preferred method since the institution has access to feedback and lessons learned* http://int.lanl.gov/safety/iwmc/ *[Click on the Submit IWD Part 4 Post-Job Review]).*

Supervisor or designee

[6] **IF** this procedure is categorized as a moderate or high/complex activity and any of the following occur:

- An activity was completed for the first time
- A request was made by anyone involved with the performance of this procedure to perform a post-job review
- An abnormal event occurred
- A revision to an existing procedure was issued and it has been determined by the procedure owner or designee that a Post-Job Review is required

THEN PERFORM a Post-Job Review in accordance with P300.

[7] **IF** the Post-Job Review identified any necessary changes to this procedure,
THEN INITIATE a revision to this procedure.

9.2 Records Processing

Supervisor or designee

[1] Disposition records in accordance with the following:

Record Identification	Record Type Determination	Protection/Storage Method	Processing Instructions
Attachment 1, TA-54 Area G TRU Oversized Container Remediation Data Sheet Attachment 2, TA-54 Area G TRU Oversized Container Prohibited Item Collection Container Data Sheet Attachment 3, TA-54 Area G POC Waste Logsheet Attachment 4, TA-54 Area G SWB/Daughter Waste Container Remediation Data Sheet Attachment 5, LTP LLW/MLLW Container Data Sheet SCO Collected Acceptable Knowledge Documentation (e.g., photographs, and waste description)	Quality Assurance (QA) Record	Supervision **SHALL** implement a reasonable level of protection to prevent loss and degradation. Records should be maintained in a one-hour fire rated metal file cabinet when not in use.	When the records are ready for final disposition, the record is transferred to Records Management in accordance with EP-DIR-AP-10003, Record Management Procedure For ADEP Employees.

10. REFERENCES

ABD-WFM-002, Technical Safety Requirements (TSRs) for Technical Area 54, Area G

CCP-TP-113, Standard Waste Visual Examination

CH-TRU Payload Appendices

DOE/WIPP 11-3384, CBFO Approved Filter Vents

10. REFERENCES (continued)

EP-DIV-AP-13, WDP TSR-Related Operational Limits Actions Compliance Tracking

EP-AREAG-FO-AP-1072, TA-54 Area G SSSR Area TRU MAR Inventory Control

EP-AREAG-FO-AP-1097, TA-54 Area G Combustibles/Flammables Control

EP-AREAG-FO-DOP-1087, TA-54 Work Release Inspection Sheet

EP-AREAG-WO-DOP-1161, TA-54 Area G TRU Waste Glovebag Operations

EP-AREAG-WO-DOP-0220, TA-54 Area G Building 412 Containment Tent Operator Round Sheet

EP-AREAG-WO-DOP-1015, TA-54 Area G Pipe Overpack Container Operations

EP-AREAG-WO-DOP-1061, TA-54 Area G Dome 375 PermaCon Operator Round Sheet

EP-AREAG-WO-DOP-1069, TA-54 Area G TRU SWB/Drum Operations

EP-AREAG-WO-DOP-1070, TA-54 Area G Unvented TRU Waste Container Handling and Storage

EP-AREAG-WO-DOP-1090, TA-54 Area G High-FGE TRU Waste Container Operations

EP-AREAG-WO-DOP-1162, TA-54 Area G Dome 231 PermaCon Operator Round Sheet

EP-DIV-AP-20098, LTP TRU Waste Remediation Safety Evaluation

EP-DIV-DOP-20043, LTP TRU Waste Container Labeling

EP-DIV-AP-0112, EWMO Pre-Job Briefings

EP-DIV-POLICY-20057, EWMO Health and Safety Policy – Manual Movement

EP-DIV-REPORT-09, Engineering Path Forward Report for CMR Wing 2 Containers

EP-DOP-2303, On-Site Waste Management

EP-DIR-AP-10003, Record Management Procedure For ADEP Employees

10. REFERENCES (continued)

EP-DIV-AP-20059, EWMO Watchbill Administration

EP-TD-2204, Requirements Document for Radiological Characterization of Surface Contaminated Objects at LANL

EP2011-5332, Compliance with LANL Hazardous Waste Facility Permit Processing/Packaging in the 412 or Future 375 Boxline Processing Facilities

LANL Hazardous Waste Permit (November 2010)

NCS-CSLA-13-001, Waste Container Remediation and Repackaging

NCS-CSLA-14-016, Building 412, Dome 231, and Dome 375 Contamination Control Enclosures Remediation & Characterization of Bolas Grande Confinement Vessels

NFPA 55Compressed Gases and Cryogenic Fluids Code

PD1220, LANL Fire Protection Program

P101-20, Fall Protection Program

P101-25, Cranes, Hoists, Lifting Devices, and Rigging Equipment

P101-26, Welding, Cutting, and Other Spark-or Flame Producing Operations

P330-6, Nonconformance Reporting

P101-18, Procedure for Pause/Stop Work

P930-1, LANL Waste Acceptance Criteria

REPORT-WFM-017, Fire Hazard Analysis for Technical Area 54, Area G

RP-1-DP-65, Radiological Containments

APPENDIX 1
Page 1 of 1

PROHIBITED ITEMS LIST

LIST OF PROHIBITED ITEMS
Liquid Wastes Liquid waste is not acceptable at WIPP. Observable liquid (liquid that can be seen by a trained radiography operator or by a trained operator performing visual examination of the waste) containing PCBs is prohibited at WIPP. Liquid in the quantities delineated below is acceptable: • Observable liquid shall be less than 1% by volume of the outermost container at the time of radiography or visual examination. • Internal containers with more than 60 milliliters or 3 percent by volume observable liquid, whichever is greater, are prohibited. • Containers with Hazardous Waste Number U134 assigned **SHALL** have no observable liquid. • Overpacking the outermost container that was examined during radiography or visual examination or redistributing untreated liquid within the container **SHALL** not be used to meet the liquid volume limits.
Non-Radionuclide Pyrophorics
Non-mixed hazardous waste
Incompatible wastes (Wastes that are incompatible with backfill, seal and panel closure materials, container and packaging materials, shipping container materials, and/or other wastes.)
Explosives
Compressed Gases/Pressurized containers (e.g., aerosol cans)
Polychlorinated Biphenyl (PCB) Liquids
Ignitables
Corrosives
Reactive waste
Sealed containers
Heat-sealed bags (unvented) greater than 4 liters with a surface area <390 square inches
Sharp or heavy objects not adequately blocked, braced, or packaged

APPENDIX 2
Page 1 of 1

TRU WASTE CONTAINER INNER PACKAGE CONFINEMENT LAYER WORKSHEET

NOTE 1 *The tracking of the layers of confinement are to ensure that no waste item with greater than six layers of confinement are placed inside of a daughter waste container and to document the highest layer of confinement on Attachment 1 and the tracking of each item's layer of confinement is not required.*

NOTE 2 *If an item is checked as having 6 layers of confinement there is no reason to continue tracking the layers of confinement as no item may have over six layers of confinement.*

NOTE 3 *This worksheet is not a record.*

Daughter Waste Container No.: _____

Waste Item 1:	☐ 0	☐ 1	☐ 2	☐ 3	☐ 4	☐ 5	☐ 6
Waste Item 2:	☐ 0	☐ 1	☐ 2	☐ 3	☐ 4	☐ 5	☐ 6
Waste Item 3:	☐ 0	☐ 1	☐ 2	☐ 3	☐ 4	☐ 5	☐ 6
Waste Item 4:	☐ 0	☐ 1	☐ 2	☐ 3	☐ 4	☐ 5	☐ 6
Waste Item 5:	☐ 0	☐ 1	☐ 2	☐ 3	☐ 4	☐ 5	☐ 6
Waste Item 6:	☐ 0	☐ 1	☐ 2	☐ 3	☐ 4	☐ 5	☐ 6
Waste Item 7:	☐ 0	☐ 1	☐ 2	☐ 3	☐ 4	☐ 5	☐ 6
Waste Item 8:	☐ 0	☐ 1	☐ 2	☐ 3	☐ 4	☐ 5	☐ 6
Waste Item 9:	☐ 0	☐ 1	☐ 2	☐ 3	☐ 4	☐ 5	☐ 6
Waste Item 10:	☐ 0	☐ 1	☐ 2	☐ 3	☐ 4	☐ 5	☐ 6
Waste Item 11:	☐ 0	☐ 1	☐ 2	☐ 3	☐ 4	☐ 5	☐ 6
Waste Item 12:	☐ 0	☐ 1	☐ 2	☐ 3	☐ 4	☐ 5	☐ 6

ATTACHMENT 1
Page 1 of 9

TA-54 AREA G TRU OVERSIZED CONTAINER REMEDIATION DATA SHEET

Page _____ of _____

4.3[7] Parent waste container unique identifier: _____

PE-Ci Value: _____ PE-Ci

PE-Ci Equivalent Combustible Waste Value: _____ PE-Ci

Activity Hazard Category Requirement:

☐ Radiological (< 0.52 PE-Ci)

☐ HC-2/3 (≤ 18 PE-Ci Equivalent Combustible Waste)

Facility ☐ TA-54-231 ☐ TA-54-375 ☐ TA-54-412

4.2.1[4] MultiRAE Monitor information: ☐ N/A

Serial No.: _____

Cal. Date: _____

Calibration within 30 days: ☐ SAT ☐ UNSAT

Accuracy verified through Bump Check within ±10%: ☐ SAT ☐ UNSAT

4.3[3] **($)** Electrical equipment/tools satisfy the National Electric Code (NEC) or Underwriters Laboratories (UL) requirements (or equivalent) or have been ESO approved: ☐ N/A

_____ / _____ _____ / _____ _____ / _____
Initials / Z# Date Initials / Z# Date Initials / Z# Date

4.3[6] **($)** Combustible/flammable liquids are authorized (i.e., attended and total volume is less than or equal to 100 gal) (LCO 3.3.1)

_____ / _____ _____ / _____ _____ / _____
Initials / Z# Date Initials / Z# Date Initials / Z# Date

_____ / _____ _____ / _____ _____ / _____
Initials / Z# Date Initials / Z# Date Initials / Z# Date

_____ / _____ _____ / _____ _____ / _____
Initials / Z# Date Initials / Z# Date Initials / Z# Date

4.3[14] Parent Oversized Container Gross Weight: _____ lb

ATTACHMENT 1
Page 2 of 9

Page _____ of _____

4.3[7] Parent waste container unique identifier: _____

4.3[17][A] Ohmmeter information:
M&TE No.: _____ Cal. Exp. Date: _____
Range: _____ Accuracy: _____

4.3[17][B] Bonding wire resistance value within the calibrated range of Ohmmeter: ☐ YES ☐ NO ☐ N/A

4.3[17][D] Bonding wire #1 resistance reading: _____ Ω
Bonding wire #2 resistance reading: _____ Ω

4.3[17][E] **($)**Bonding wire resistance values are less than or equal to 5 Ω:
☐ SAT ☐ UNSAT ☐ N/A
Signature/Date_____/_____
Print Name/Z#_____/_____

4.3[16] **($)** STATIONARY FIRE WATCH established. (SAC 5.7.17)

_____/_____	_____/_____	_____/_____
Initials / Z# Date	Initials / Z# Date	Initials / Z# Date
_____/_____	_____/_____	_____/_____
Initials / Z# Date	Initials / Z# Date	Initials / Z# Date

5.[7] Date and approximate time container remediation initiated: _____/_____
Date Time

5.[29] Lowest 75% capacity equipment: _____ lb ☐ N/A

5.[31][P] Glovebox weight: _____ lb ☐ N/A
Calibrated Scale: Cal. File No.: _____
Manufacturer: _____
Model: _____
Last Cal Date: _____
Last Cal Date within 1 yr: ☐ YES ☐ NO

5.[31][S][c] Glovebox Package (glovebox plus container) weight: _____ lb ☐ N/A

ATTACHMENT 1
Page 3 of 9

Page _____ of _____

4.3[7] Parent waste container unique identifier: _____

5.[32] Liquid is present in oversized container ☐ YES ☐ N/A

NOTE *The following containers are considered SAC 5.7.12 compliant:*
- *Plastic container with any lid*
- *Container with a plastic lid*
- *Container without a gasket (e.g., containers with slip lids, paint cans, produce cans, and other similar containers of any volume)*
- *Container with a slip-on lid (with or without a gasket)*
- *Container that does not contain TRU waste*
- *Fiber board containers of any volume*

5.[35] **($)** SAC 5.7.12 non-compliant containers are present: ☐ YES ☐ NO

5.[36][A] Contamination control enclosure posted to prevent these activities: ☐ SAT ☐ UNSAT ☐ N/A

5.[36][B] **($)**Sealed container flanges have been raised such that each flange (i.e., openings) is at the high point of the sealed container (SAC 5.7.18): ☐ SAT ☐ UNSAT ☐ N/A

5.[36][C] **($)** Air Mover D/P readings satisfies the following applicable criteria: ☐ SAT ☐ UNSAT ☐ N/A
- Dome 231 is ≥ 0.5 to ≤ 2.5 in. wc
- Building 412 is ≥ 0.5 to ≤ 3.5 in. wc
- Dome 375 is ≥ 1.0 to ≤ 2.5 in. wc

5.[36][D] Bonding mat/wire inspection satisfactory: ☐ SAT ☐ UNSAT ☐ N/A

5.[36][F][c] Resistance between the bonding mat and sealed containers: _____ Ω

5.[36][F][d] **($)** Resistance between the bonding mat and sealed containers ≤ 5 Ω: (SAC 5.7.18) ☐ SAT ☐ UNSAT ☐ N/A

5.[36][H] **($)** All spark-generating operations within the structure (e.g., TA-54-375) contamination control enclosure have been paused (SAC 5.7.18): ☐ SAT ☐ UNSAT ☐ N/A

ATTACHMENT 1
Page 4 of 9

Page _____ of _____

4.3[7] Parent waste container unique identifier: _____

5.[36][O] Time sealed container venting started: _____ min.

5.[36][P][a] Time sealed container venting completed: _____ min.

5.[36][P][b] Sealed container vented for ≥ 30 minutes: ☐ SAT ☐ UNSAT ☐ N/A

5.[36][Q] Sealed container opening %LEL and % Oxygen:

		Hydrogen	Oxygen
Container #1 Flange	—	_____ %	_____ %
Container #2 Flange	—	_____ %	_____ %
Container #3 Flange	—	_____ %	_____ %
Container #4 Flange	—	_____ %	_____ %
Container #5 Flange	—	_____ %	_____ %

5.[36][R] **($)**%LEL Hydrogen < 25% and % Oxygen ≥ 10% at all sealed container openings (5.7.18, PD1220 and NFPA 55):

☐ SAT ☐ UNSAT ☐ N/A

5.[36][U] **($)** Air Mover D/P readings satisfies the following applicable criteria:

- Dome 231 is ≥ 0.5 to ≤ 2.5 in. wc ☐ SAT ☐ UNSAT ☐ N/A
- Building 412 is ≥ 0.5 to ≤ 3.5 in. wc
- Dome 375 is ≥ 1.0 to ≤ 2.5 in. wc

5.[39] Containerized liquids present: ☐ YES ☐ NO

5.[40][D]/[E] Containerized liquid: ☐ N/A

Liquid Volume/Unit				
Liquid pH				

5.[43] Potentially pressurized containers present: ☐ YES ☐ NO

5.[47][C] PCB item numbers: _____

5.[60] **($)** STATIONARY FIRE WATCH secured. _____/_____
Initials/Z# Date

5.[65] Date and approximate time oversized container remediation completed: _____/_____
Date Time

ATTACHMENT 1
Page 5 of 9

NOTE *Multiple copies of this Attachment 1 page are used to separately document each LLW Daughter Waste Container generated from the identified parent waste container.*

Page _____ of _____

4.3[7] Parent waste container unique identifier: _____

5.[71][C] LLW Daughter Waste Container
Serial No.: _____
WCATS No.: _____
Container Type: ☐ B-12 ☐ B-25
☐ Other _____
☐ SCO _____

Calibrated Scale: Cal. File No.: _____
Manufacturer: _____
Model: _____
Last Cal Date: _____
Last Cal Date within 1 yr: ☐ YES ☐ NO

LLW Daughter Gross Weight: _____ lb

LLW Daughter Tare Weight: _____ lb

LLW Daughter Net Weight: _____ lb

LLW Daughter information: _____
_____
_____
_____

LLW Daughter contents/item description: _____
_____
_____
_____

Closure Date: _____

Performed By: _____ / _____ / _____ / _____
Operator (Print) Signature Z # Date

ATTACHMENT 1
Page 6 of 9

NOTE *Multiple copies of this Attachment 1 page are used to separately document each TRU Daughter Waste Container generated from the identified parent waste container.*

Page _____ of _____

4.3[7] Parent waste container unique identifier: _____

5.[62] TRU Daughter Waste Container
Serial No.: _____
WCATS No.: _____
Container Type: ☐ 55-gal ☐ SWB
☐ Other _____

Calibrated Scale: Cal. File No.: _____
Manufacturer: _____
Model: _____
Last Cal Date: _____
Last Cal Date within 1 yr: ☐ YES ☐ NO

Total Confinement Layers (< 6): _____

Closure Date: _____

TRU Daughter Gross Weight: _____ lb

TRU Daughter Tare Weight: _____ lb

TRU Daughter Net Weight: _____ lb

TRU Daughter information: _____
_____
_____
_____

TRU Daughter contents/item description: _____
_____
_____
_____

Performed By: _____ / _____ / _____ / _____
Operator (Print) Signature Z # Date

ATTACHMENT 1
Page 7 of 9

Page _____ of _____

4.3[7] Parent waste container unique identifier: _____

7.[5] **($)** One of the following exists: (SAC 5.7.17) ☐ N/A

- Exposed waste material covered by a fire blanket or other fire retardant material
- STATIONARY FIRE WATCH established inside of the SSSR process area

_____/_____ _____/_____ _____/_____
Initials / Z# Date Initials / Z# Date Initials / Z# Date

_____/_____ _____/_____ _____/_____
Initials / Z# Date Initials / Z# Date Initials / Z# Date

Date/Time (7.[8])	Facility (7.[8])	Air Mover	Required HEPA DP (in. wc)	Air Mover Status (7.[8])	Required HEPA DP (in. wc) (7.[8])
	☐ Dome TA-54-231 PermaCon	AM-01/ AM-02/ AM-03/ AM-08	≥ 0.5 to ≤ 2.5	☐ ON ☐ OFF ☐ N/A	☐ SAT ☐ UNSAT ☐ N/A
				☐ ON ☐ OFF ☐ N/A	☐ SAT ☐ UNSAT ☐ N/A
	☐ Building TA-54-412 Enclosure	AM-01/ AM-02/ AM-03	≥ 0.5 to ≤ 3.5	☐ ON ☐ OFF ☐ N/A	☐ SAT ☐ UNSAT ☐ N/A
				☐ ON ☐ OFF ☐ N/A	☐ SAT ☐ UNSAT ☐ N/A
	☐ Dome TA-54-375 PermaCon	PDI-003/ PDI-004	≥ 1.0 to ≤ 2.5	☐ ON ☐ OFF ☐ N/A	☐ SAT ☐ UNSAT ☐ N/A
				☐ ON ☐ OFF ☐ N/A	☐ SAT ☐ UNSAT ☐ N/A

7.[9] All combustible/flammable liquids removed from SSSR AREA and associated CRA or are ATTENDED:

_____/_____ _____/_____ _____/_____
Initials / Z# Date Initials / Z# Date Initials / Z# Date

_____/_____ _____/_____ _____/_____
Initials / Z# Date Initials / Z# Date Initials / Z# Date

ATTACHMENT 1
Page 8 of 9

Page _____ of _____

4.3[7] Parent waste container unique identifier: _____

Comments: _____

ATTACHMENT 1
Page 9 of 9

Page _____ of _____

4.3[7] Parent waste container unique identifier: _____

9.1[1] Performed By: _____ / _____ / _____ / _____
Operator (Print) Signature Z # Date

9.1[4] Reviewed By: _____ / _____ / _____ / _____
Supervisor/Designee (Print) Signature Z # Date

9.1[5][B] Acceptance criteria satisfied: ☐ YES ☐ NO

9.1[5][D]
Approved by: _____ / _____ / _____ / _____ / _____
SOS/SOM or designee (print) Signature Z # Date Time

ATTACHMENT 2

Page 1 of 1

TA-54 AREA G OVERSIZED CONTAINER PROHIBITED ITEM COLLECTION CONTAINER DATA SHEET

(5.[46][B]) ☐ Pressurized Container ☐ Aerosol Cans ☐ Other					Date Created (5.[46][B]):			Page: _____ of _____	
Date Item Added (5.[46][B])	Item and/or PCB ID No. (5.[46][D]/5.[49][C])	Parent Oversized Container No. (5.[46][B])	Parent Oversized Container EPA Code (5.[46][B])	Parent Oversized Container Accumulation Start or Received Date (5.[46][B])	Item Description (5.[46][B])	Item Shape (5.[46][B])	Item Size (5.[46][B])	Item Labeling (5.[46][B])	Item Weight (lb) (5.[46][B])

Comments: _____

_____

9.1[1] Performed By: _____ / _____ / _____ / _____
Operator (Print) Signature Z # Date

9.1[4] Reviewed By: _____ / _____ / _____ / _____
Supervisor/Designee (Print) Signature Z # Date

ATTACHMENT 3
Page 1 of 1

TA-54 AREA G POC WASTE LOGSHEET

5.[42][A] Total PE-Ci MAR: _____ PE-Ci
FGE: _____ g

5.[42][B] POC Assembly Serial No.: _____

Step 5.[42][E] Oversized Container Number	Step 5.[42][E] POC Waste Description	Step 5.[42][E] On Contact Dose Rate

5.[42][F] Highest layer of confinement placed in daughter waste container: _____
(< 6)

Comments: _____

9.1[1] Performed By: _____ / _____ / _____ / _____
Operator (Print) Signature Z # Date

9.1[4] Reviewed By: _____ / _____ / _____ / _____
Supervisor/Designee (Print) Signature Z # Date

ATTACHMENT 4
Page 1 of 4

TA-54 AREA G SWB/DAUGHTER WASTE CONTAINER REMEDIATION DATA SHEET

Page _____ of _____

4.3[7] Waste container unique identifier: _____

PE-Ci Value: _____ PE-Ci

PE-Ci Equivalent Combustible Waste Value: _____ PE-Ci

Activity Hazard Category Requirement:

☐ Radiological (< 0.52 PE-Ci)

☐ HC-2/3 (≤ 18 PE-Ci Equivalent Combustible Waste)

Facility ☐ TA-54-231 ☐ TA-54-375 ☐ TA-54-412

4.3[3] Electrical equipment/tools satisfy the National Electric Code (NEC) or Underwriters Laboratories (UL) requirements (or equivalent) or have been ESO approved: ☐ N/A

_____ / _____	_____ / _____	_____ / _____
Initials / Z# Date	Initials / Z# Date	Initials / Z# Date

4.3[6] **($)** Combustible/flammable liquids are authorized (i.e., attended and total volume is less than or equal to 100 gal) (LCO 3.3.1) _____ / _____
Initials / Z# Date

4.3[16] **($)** STATIONARY FIRE WATCH established. (SAC 5.7.17)

_____ / _____	_____ / _____	_____ / _____
Initials / Z# Date	Initials / Z# Date	Initials / Z# Date
_____ / _____	_____ / _____	_____ / _____
Initials / Z# Date	Initials / Z# Date	Initials / Z# Date

ATTACHMENT 4
Page 2 of 4

Page _____ of _____

4.3[7] Waste container unique identifier: _____

8.[15][C]/[D] Containerized liquid: ☐ N/A

Liquid Volume/Unit				
Liquid pH				

(8.[17][C]) ☐ Pressurized Container ☐ Aerosol Cans ☐ Other			Date Created (8.[17][C]):	Page: _____ of _____
Date Item Added (8.[17][C])				
Item ID No. (8.[17][E])				
Parent Container No. (8.[17][C])				
Parent Container EPA Code (8.[17][C])				
Parent Container Accumulation Start or Received Date (8.[17][C])				
Item Description (8.[17][C])				
Item Shape (8.[17][C])				
Item Size (8.[17][C])				
Item Labeling (8.[17][C])				
Item Weight (lb) (8.[17][C])				

ATTACHMENT 4
Page 3 of 4

NOTE *Multiple copies of this Attachment 4 page are used to separately document each TRU Daughter Waste Container generated from the identified parent waste container.*

Page _____ of _____

4.3[7] Parent waste container unique identifier: _____

8.[24] TRU Daughter Waste Container
Serial No.: _____
WCATS No.: _____
Container Type: ☐ 55-gal ☐ SWB
☐ Other _____

Calibrated Scale: Cal. File No.: _____
Manufacturer: _____
Model: _____
Last Cal Date: _____
Last Cal Date within 1 yr: ☐ YES ☐ NO

Total Confinement Layers (< 6): _____

Closure Date: _____

TRU Daughter Gross Weight: _____ lb

TRU Daughter Tare Weight: _____ lb

TRU Daughter Net Weight: _____ lb

TRU Daughter information: _____
_____
_____
_____

TRU Daughter contents/item description: _____
_____
_____
_____

Performed By: _____ / _____ / _____ / _____
Operator (Print) Signature Z # Date

ATTACHMENT 4
Page 4 of 4

Page _____ of _____

4.3[7] Waste container unique identifier: _____

7.[5] **($)** One of the following exists: (SAC 5.7.17) ☐ N/A

- Exposed waste material covered by a fire blanket or other fire retardant material
- STATIONARY FIRE WATCH established inside of the SSSR process area

Initials / Z#	Date	Initials / Z#	Date	Initials / Z#	Date
	/		/		/
Initials / Z#	Date	Initials / Z#	Date	Initials / Z#	Date
	/		/		/

Date/Time (7.[8])	Facility (7.[8])	Air Mover	Required HEPA DP (in. wc)	Air Mover Status (7.[8])	Required HEPA DP (in. wc) (7.[8])
	☐ Dome TA-54-231 PermaCon	AM-01/ AM-02/ AM-03/ AM-08	≥ 0.5 to ≤ 2.5	☐ ON ☐ OFF ☐ N/A	☐ SAT ☐ UNSAT ☐ N/A
				☐ ON ☐ OFF ☐ N/A	☐ SAT ☐ UNSAT ☐ N/A
	☐ Building TA-54-412 Enclosure	AM-01/ AM-02/ AM-03	≥ 0.5 to ≤ 3.5	☐ ON ☐ OFF ☐ N/A	☐ SAT ☐ UNSAT ☐ N/A
				☐ ON ☐ OFF ☐ N/A	☐ SAT ☐ UNSAT ☐ N/A
	☐ Dome TA-54-375 PermaCon	PDI-003/ PDI-004	≥ 1.0 to ≤ 2.5	☐ ON ☐ OFF ☐ N/A	☐ SAT ☐ UNSAT ☐ N/A
				☐ ON ☐ OFF ☐ N/A	☐ SAT ☐ UNSAT ☐ N/A

7.[9] All combustible/flammable liquids removed from SSSR AREA and associated CRA or are ATTENDED:

Initials / Z#	Date	Initials / Z#	Date	Initials / Z#	Date
	/		/		/
Initials / Z#	Date	Initials / Z#	Date	Initials / Z#	Date
	/		/		/

Comments: _____

9.1[1] Performed By: _____ / _____ / _____ / _____
Operator (Print) Signature Z # Date

9.1[4] Reviewed By: _____ / _____ / _____ / _____
Supervisor/Designee (Print) Signature Z # Date

9.1[5][B] Acceptance criteria satisfied: ☐ YES ☐ NO

9.1[5][D] Approved by: _____ / _____ / _____ / _____ / _____
SOS/SOM or designee (print) Signature Z # Date Time

ATTACHMENT 5
Page 1 of 2

LTP LLW/MLLW CONTAINER DATA SHEET

Daughter Container ID (5.[70][A]):	
TRU Parent Container Unique ID (5.[70][A]):	
Waste Profile No. (5.[70][A]):	
Container Type and Condition (5.[70][A]):	
Certified Waste Container Weight (5.[70][A]):	☐ kg ☐ lb
Certified Waste Weight (5.[70][A]):	☐ kg ☐ lb
Outer Container Vented? (5.[70][A]):	☐ Yes ☐ No
Waste Physical/Chemical Characterization (5.[70][A])	
Evaluation Method: ☐ Quick RTR Scans ☐ Complete RTR Scans ☐ RTR Tape#/Source Video: _____ ☐ Sample Data Reference: _____ ☐ Historical AK Documentation Reference: _____ ☐ Visual Exam ☐ Other, Explain: _____ Waste Container Documents (e.g., remediation attachments): _____	
Waste Matrix:	☐ Debris ☐ Non-Debris ☐ Liquid
Waste Description and Discrepancy Resolution:	

Waste Container Prohibited or Restricted Items (5.[70][B])				
	Yes	No	N/A	Description or Amount
Aerosol Cans	☐	☐		
If yes, vented?	☐	☐	☐	
Animal Carcasses	☐	☐		
Asbestos	☐	☐		
Batteries	☐	☐		
Compressed Gases	☐	☐		
If yes, vented?	☐	☐	☐	
Compressors/Refrigerator systems	☐	☐		
Explosives	☐	☐		
Impenetrable Objects (% by volume)	☐	☐		
Lead – Describe	☐	☐		
If yes, elemental?	☐	☐	☐	
Liquid (volume)	☐	☐		
If yes, containerized?	☐	☐	☐	

ATTACHMENT 5
Page 2 of 2

Daughter Container ID:			
Waste Container Prohibited or Restricted Items (5.[70][B]) (continued)			
	Yes	No	Description or Amount
Mercury	☐	☐	
Particulates	☐	☐	
PCBs	☐	☐	
Sharps	☐	☐	
Sealed Sources	☐	☐	
Tanks/Vessels	☐	☐	
Valves	☐	☐	
Beryllium	☐	☐	
Classified Waste	☐	☐	
D001, D002, and/or D003 Waste	☐	☐	
Etiological Agents	☐	☐	
Pyrophoric Waste	☐	☐	
Solid Uranium/Thorium	☐	☐	
Waste Container RCRA Characterization (5.[70][B])			
RCRA Waste Codes:			
For Non-Debris list UHCs and/or Constituent Concentration Reference:			

Comments: _____

9.1[1] Performed By: _____ / _____ / _____ / _____
Operator (Print) Signature Z # Date

9.1[4] Reviewed By: _____ / _____ / _____ / _____
Supervisor/Designee (Print) Signature Z # Date

EP-AREAG-WO-DOP-1155, TA-54 Area G TRU Corrugated Metal Box SSSR Activities

LAUR-14-24891

TA-54 Area G TRU
Corrugated Metal Box SSSR Activities

Effective Date: 11/21/13

Hazard Class:	☐	Low	☒	Moderate	☐	High/Complex
Usage Mode:	☐	Reference	☒	UET	☐	Both UET & Reference

The Responsible Manager has determined that the following organizations' review/concurrence is required for the initial document, and for major revisions a same type and level review is required. Review documentation is contained in the Document History File:

Engineering
Quality Assurance
Radiation Protection
Industrial Hygiene and Safety
Subject-Matter Expert
Shift Operations Manager
Environmental Stewardship
Criticality Safety
Fire Protection Engineering
Central Characterization Program

Responsible Manager, LTP-OCP Operations Manager

Name (print)	Z#	Signature	Date
Paul N. Newberry	112056	/s/ Paul Newberry	11/21/13

Classification Review: ☐ N/A ☒ Unclassified ☐ UCNI ☐ Classified _____

Name (print)	Z#	Signature	Date
Teri Tingey	200975	/s/ Teri Tingey	11/19/13

Working Copy / Information Only (circle one)
Initials / Date: _____/_____

This document fully satisfies the requirements of P300, Integrated Work Management in order to systematically describe the work activity, the associated hazards, and the controls that **MUST** be employed to mitigate the risks.

REVISION HISTORY

Document Number	Issue Date	Action	Description
EP-AREAG-WO-DOP-1155, R.0	May 10, 2013	New document	
EP-AREAG-WO-DOP-1155, R.0 IPC-1	May, 10, 2013	IPC-1	Revised to remove non-sparking, (e.g., brass) from Step 6. [8].[B].
EP-AREAG-WO-DOP-1155, R.0 IPC-2	May, 11, 2013	IPC-2	Clarification of a path forward for obstructed filter vents within CMB. Revise 6.[7] – [8].
EP-AREAG-WO-DOP-1155, R.1	May 17, 2013	Major Revision	Revise procedure to add new section for leaving a CMB that has not completed the modification process in the contamination control enclosure overnight, rearrange steps for better flow, remove PPE disposition step, and add clarification that the CMB material placed in the CMB disposal container is ≤ 50,000 dpm alpha contamination. Make editorial corrections such as correcting references. This revision does not introduce any new hazards.
EP-AREAG-WO-DOP-1155, R.1 IPC-1	June 3, 2013	IPC-1	Revise procedure to add Dome 54-375 PermaCon and Building 54-412 contamination enclosure locations to scanning step 5.[5]. Add new scanning step 5.[42] and renumber subsequent steps. This revision does not introduce any new hazards.
EP-AREAG-WO-DOP-1155, R.2	August 15, 2013	Major Revision	Revise procedure to implement TSR Page Change R.0.34. In Section 3, changed SAC 5.6.5(3) to AC 5.6.5(3); added "exclusive of MAR in process" to LCO 3.7.3 entry; added new SAC 5.6.4.6; and added definition of exposed TRU waste in accordance with SAC 5.6.4.6. Added STATIONARY FIRE WATCH to minimum staffing step 4.1[5]. Revised step 5.[17] to either stand a STATIONARY FIRE WATCH or cover the exposed area with a fire blanket (SAC 5.6.4.6). Added new step 7.[5] to address SAC 5.6.4.6 and renumbered subsequent steps; added corresponding item in Attachment 1. Also made Radiation Protection directed changes: deleted original steps 5.[13]/[14] and 5.[20]/[21] regarding surveys and Hold Points and modified some language in RP steps and notes. (RCTs perform job coverage surveys as necessary based on their training and RP procedures.) Renumbered steps as necessary. Made editorial changes. This revision does not introduce any new hazards.

REVISION HISTORY

Document Number	Issue Date	Action	Description
EP-AREAG-WO-DOP-1155, R3	September 30, 2013	Major Revision	Revise procedure to incorporate requirements of ABD-WFM-002 Rev 2.0 Technical Safety Requirements (TSRs) for Technical Area 54, Area G. No new hazards are introduced by this revision. Revisions captured under EP-AREAG-WO-DOP-1155, R.2 are not captured under this revision.
EP-AREAG-WO-DOP-1155, R4	November 21, 2013	Major Revision	Revise procedure to reconcile the Area G BIO 2.0 implemented version of the procedure with the changes made to EP-AREAG-WO-DOP-1155 during the development of the Area G BIO 2.0 version of the procedure. This revision does not introduce any new hazards.

TABLE OF CONTENTS

Section Page

TITLE PAGE 1
REVISION HISTORY 2
TABLE OF CONTENTS 3

1. PURPOSE 5

2. SCOPE 5

3. PRECAUTIONS AND LIMITATIONS 5

4. PREREQUISITE ACTIONS 13
4.1 Planning and Coordination 13
4.2 Materials and Equipment 15
4.2.1 Measurement and Test Equipment (M&TE) 15
4.2.2 Special Tools and Equipment 16
4.2.3 Consumables 16
4.3 Field Preparation 17

5. INSTRUCTIONS—CORRUGATED METAL BOX MODIFICATION 20

6. INSTRUCTIONS—FILTERED VENT INSTALLATION 29

7. INSTRUCTIONS—SECURING ENCLOSURE WITH IN-PROCESS WASTE CONTAINER 35

8. POST-PERFORMANCE ACTIVITIES 38
8.1 Disposition 38
8.2 Records Processing 40

9. REFERENCES 41

Attachments
Attachment 1, TA-54 Area G TRU CMB Processing Data Sheet 43
Attachment 2, TA-54 Area G TRU CMB Filtered Vent Installation Data Sheet 46

1. PURPOSE

This procedure provides instructions for modifying transuranic (TRU) corrugated metal boxes (CMBs) that are currently located within the boundaries of Technical Area (TA)-54 Area G and that should have an internal secondary containment such as a wooden box or plastic liner/bag.

This procedure provides instructions for the sorting, segregating, size reduction, and repackaging (SSSR) activities associated with the CMBs at TA-54.

2. SCOPE

This procedure applies to waste and support-services subcontractor personnel involved with CMB modification operations within TA-54 Area G.

This procedure addresses the preparation process (i.e., modifications and venting) for the CMBs in order to permit the modified CMBs to be loaded into an overpack container. This procedure does not provide instructions for the modification of a CMB that does not have an internal secondary containment nor does this procedure address the remediation of the TRU waste within the CMB.

Waste container remediation may be suspended and resumed in accordance with P315, Conduct of Operations, for a waste container remediation that is not completed within a shift or multiple consecutive shifts.

3. PRECAUTIONS AND LIMITATIONS

- To comply with the intent of the As Low As Reasonably Achievable (ALARA) Program, all personnel **SHALL** apply the principles of time, distance, and shielding when working with radiological materials.

- Personal protective equipment (PPE) **SHALL** be worn as required by the industrial hygiene exposure assessment, applicable Material Safety Data Sheet (MSDS), and Radiological Work Permit (RWP).

3. PRECAUTIONS AND LIMITATIONS (continued)

- The processing of the CMBs in accordance with this procedure is limited to those CMBs with an approved LTP Waste Remediation Safety Evaluation Data Sheet (EP-DIV-AP-20098, LTP TRU Waste Remediation Safety Evaluation, Attachment 1).

- Personnel **SHALL** use the appropriate waste container handling PPE, such as leather or mechanic's gloves, when moving waste containers or when removing or applying waste container lids.

- The approximate weight of the load should be known before moving and the appropriate capacity lift selected. Be aware of uneven loading and shifts in the load when moving.

- A mechanical lift **SHALL** be used to handle objects that weigh greater than or equal to 50 lb or that weigh more than 1/3 of the body weight of the individual performing the lifting in accordance with EP-DIV-POLICY-20057, EWMO Health and Safety Policy – Manual Movement. An approved exception to this requirement that is documented and includes the approved non-mechanically assisted method may be obtained in accordance with EP-DIV-POLICY-20057.

- At no time is any individual permitted to place any portion of their body under a suspended load.

- During high temperature and humid days, while using respirators and impermeable or multilayered work clothing which limits air movement, or during high-physical exertion individuals must be aware of potential heat stress. It must be noted that poor physical condition, some medicines, and inadequate tolerance for hot workplaces may result in elevated potential to heat stress. In order to reduce the potential of heat stress the following activities should be practiced:
  - Allow sufficient time for proper acclimatization to heat
  - Increase fluid and electrolyte intake before, during, and after work
  - Drink in designated break areas or approved hydration stations during work hours
  - Use an industrial hygiene and safety approved work/rest regimen
  - Recognize the early symptoms of heat stress
  - Consider heat stress when selecting personal protective equipment

3. PRECAUTIONS AND LIMITATIONS (continued)

- Job-related heat stress varies due to environmental conditions, type of work, metabolic rate, and clothing requirements. When heat stress monitoring is conducted, supervision and the industrial hygiene and safety team **SHALL** assess heat stress hazards and recommend control measures as warranted.

- Activities, items, and containers **SHALL** satisfy approved design specification, regulatory requirements, process-specific parameters, and procedural requirements. Activities, items, or containers that do not conform to the approved specifications and requirements are considered nonconforming and Nonconformance Reports (NCRs) **SHALL** be generated in accordance with P330-6, Nonconformance Reporting, as required.

- When a worker observes an unsafe condition or act that may pose an imminent danger or other safety concern/hazard, the worker has the authority and responsibility to inform the worker engaged in the work and request that the work activity be paused and/or stopped based on the risk posed to the individual, the employees, the environment, or the facility in accordance with P101-18, Procedure for Pause/Stop Work.

- Avoid slips, trips, and falls by wearing the proper footwear with slip-resistant soles and using handrails when using stairs. Use established pathways when available and avoid walking on uneven or unstable surfaces.

- Not Applicable (N/A) is documented on the attachments during the performance of this procedure indicating information that is not required to be recorded.

- This procedure contains special procedure step markings. **($)** is used to identify steps that implement TA-54 Area G Safety Basis requirements. Steps containing **($)** may not be changed without Engineering approval to ensure the safety envelope is maintained.

- Those steps of the procedure that are the direct implementation of a criticality safety administrative requirement are identified by a (*) and circle-CS symbol CS to the left of the step.

CS
- **(*)** Only one parent waste container may be present at a time within each physically separate work area in an SSSR AREA. (NCS-CSLA-13-001)

CS
- **(*)** The Fissile Gram Equivalent (FGE) value of a CMB within a TA-54 Area G SSSR AREA **SHALL** be limited to less than or equal to 325 FGE. (NCS-CSLA-13-001)

3. PRECAUTIONS AND LIMITATIONS (continued)

- Consideration **SHALL** be given to the cutting direction and cut depth for CMB modification activities in order to prevent possible breaching of the internal secondary containment.

- When work cannot be accomplished as described in this procedure, or accomplishment of such work would result in an undesirable situation, a condition adverse to quality, or an unacceptable safety risk, the work **SHALL** be stopped and suspended until the appropriate change provisions are implemented. In the event of suspended operations, notify the Operations Manager and TA-54 Operations Center.

- Disconnect electrical tools from power source before changing accessories.

- The use of extension cords in the facility should be minimized. When used, the extension cord **SHALL** be rated for the load to be used and the load should be in the OFF position before connecting or removing the extension cord or appliance.

- Activities such as forklift operations **SHALL** be minimized when operations are being performed within a contamination controlled enclosure (e.g., tent) in order to reduce the possibility of the breach of the enclosure and personnel injuries.

- Do not disturb or touch wild animals, dead animals, nesting areas, droppings, or surfaces with mold growth to avoid exposure to biological threats (e.g., snakes, rodents, rodent droppings, Hanta virus, Bubonic plague, spiders, West Nile virus, molds).

- The most current list of Waste Isolation Pilot Plant (WIPP)-approved filtered vents are listed on DOE/WIPP 11-3384, CBFO Approved Filter Vents.

3. PRECAUTIONS AND LIMITATIONS (continued)

- Flammable gases and liquids **SHALL** not be stored in TRU WASTE STORAGE AREAS.

- **($)** Vehicle drivers, forklift operators, and crane operators **SHALL** be trained and maintain applicable Los Alamos National Laboratory (LANL) qualifications for equipment operations and be able to recognize specific job hazards and associated controls. [Administrative Control (AC) 5.9]

- **($)** A spotter **SHALL** be present for TRU WASTE container lifts planned to exceed 4 ft above the ground surface. If the planned lift will exceed 12 ft from the bottom of the container to the ground, a critical lift plan **SHALL** be used. [Specific Administrative Control (SAC) 5.7.8(1) and 5.7.8(2)]

- **($)** A critical lift plan **SHALL** be used for planned lifts of FRPs with MAR greater than 150 PE-Ci. [SAC 5.7.8(3)]

- Containers **SHALL** only be opened inside contamination control enclosures with HEPA-filtered ventilation overseen by a Radiological Control Technician (RCT). During the opening of containers, respirators **SHALL** be worn in accordance with RWP requirements and the removal of materials from containers **SHALL** be limited and controlled.

NOTE *A STATIONARY FIRE WATCH is a person stationed at a specific location with no other assigned duties than the purpose of making fire safety observations, notifying building occupants and the fire department of an emergency, preventing a fire from occurring, and/or extinguishing small fires as trained.*

- **($)** An SSSR AREA **SHALL** satisfy the following applicable Thermal Separation Distance requirement: [Limiting Condition for Operation (LCO) 3.2.1.3]
  - 24 ft for processing of non-METAL CONTAINERS
  - 10 ft for processing of non-METAL CONTAINERS with an established STATIONARY FIRE WATCH
  - 10 ft for processing of METAL CONTAINERS

3. PRECAUTIONS AND LIMITATIONS (continued)

- The Combustible Restricted Area (CRA) is an area that is around and encloses a DEFINED AREAs where TRANSIENT COMBUSTIBLES and combustible/flammable liquids are strictly controlled to minimize potential of possible fire incidents. The CRA is marked on controlled engineering approved drawings and is approximated by markings in the field. The marking do not have to exactly represent the drawing, but should closely represent the drawing.

- **($)** Within the DEFINED AREA and associated CRA boundary, Combustible/Flammable Liquids **SHALL** be controlled in accordance with EP-AREAG-FO-AP-1097, TA-54 Area G Combustibles/Flammables Control. (LCO 3.3.1)

- **($)** Within SSSR AREAS, FUEL PACKAGES **SHALL** be controlled as follows: (LCO 3.2.2)
  1, FUEL PACKAGES **SHALL** be ATTENDED.
  OR
  2a. Each FUEL PACKAGE **SHALL** weigh less than 100 lb of TRANSIENT COMBUSTIBLE material.
  AND
  2b. FUEL PACKAGES **SHALL** be greater than 9 ft away from non-metal waste containers and other FUEL PACKAGES.
  AND
  2c. FUEL PACKAGES **SHALL** be greater than 3 ft away from METAL CONTAINERS.

- **($)** Each SSSR AREA **SHALL** contain less than or equal to 18 PE-Ci EQUIVALENT COMBUSTIBLE WASTE in process and less than or equal to 18 PE-Ci EQUIVALENT COMBUSTIBLE WASTE staged in closed container(s). (LCO 3.1.1)

3. PRECAUTIONS AND LIMITATIONS (continued)

- **($)** A STATIONARY FIRE WATCH **SHALL** be present within the contamination enclosure in the SSSR process area whenever TRU WASTE is exposed. He or she **SHALL** have no other assigned duties than making fire safety observations, notifying building occupants and the fire department of an emergency, preventing a fire from occurring, and/or extinguishing small fires as trained. (SAC 5.7.17)

- TRU WASTE outside of a container is considered exposed. TRU WASTE covered by a fire blanket or other fire retardant material is sufficient protection from a potential fire and is not considered exposed.

- Dollies present a rolling hazard which could result in personnel injury due to a CMB/drum rolling over an individual's foot due to a collision with a rolling CMB/drum. Dollies **SHALL** be adequately chocked/locked to prevent movement when the CMB/drum is not being relocated.

- Drill bits and saw blades are sharp and can result in personnel injury or radiological contamination from compromised PPE.

- Excess materials that are not used during the processing of a CMB such as thread-locker (e.g., Loctite® 271 or Loctite® 680) **SHALL** be dispositioned in accordance with an Environmental Professional [e.g., Waste Management Coordinator (WMC)] instructions.

- Tool adjustments and blade replacements **SHALL** be performed with the cutting tool deenergized (e.g., battery removed or unplugged) in order to prevent personnel injury from an unintentional activation of the cutting tool.

- Spark-producing and non-sparking tools **SHALL** be distinguished from each other. Spark-producing tools are to be set aside, and not handled, when non-sparking tools are required.

- Battery operated tools may be considered to be spark-producing tools and are to be placed aside, and not handled, when non-sparking tools are required.

- Calibration of the MultiRAE Monitor should be performed if any of the following criteria are satisfied:
  - A field calibration has not been performed within the last 30 days
  - The monitor does not pass a Fresh Air Calibration
  - The monitor does not pass a Bump Test

3. PRECAUTIONS AND LIMITATIONS (continued)

- The MultiRAE Monitor sensors require oxygen for combustion and cannot be used in environments that contain less than approximately 10% oxygen.

- Restricting the flammable gas concentrations to less than 25% of the measured lower flammability limit (LFL) accounts for temperature induced fluctuations in the LFL, measurement uncertainty, and provides for an adequate margin of protection to ensure the ignition of flammable hydrogen gas is prevented and satisfy National Fire Protection Association (NFPA) code requirements.

- Support Services Subcontractors executing this procedure **SHALL** comply with the safety and health requirements documented in contractual agreements with LANL.

- The Class 2 laser scanning head on the Waste Compliance and Tracking System (WCATS) mobile device can cause eye injury if eye is exposed to the beam. Do not allow eyes of user or observers to become exposed to laser beam.

- The WCATS mobile device contains a lithium-ion battery. Exposure to extreme temperatures (greater than 140 °F) may cause battery to explode. Do not store the WCATS mobile device where temperatures may exceed 140 °F. Keep mobile device out of direct sunlight for extended periods of time when not in use. Do not incinerate, mutilate, short circuit, or disassemble the battery pack. Do not dispose of in municipal waste receptacles. Dispose of in properly marked universal waste disposal areas.

- If a physical transfer is postponed or does not take place for any reason after electronic processing in WCATS, then the WCATS task must REVOKED in WCATS to cancel the move in WCATS.

- WCATS is designed to allow any task performed on the WCATS mobile device to be conducted from the WCATS desktop application. This feature provides additional flexibility in the event the WCATS mobile device becomes inoperable or malfunctions or the operator may choose to perform a task using either method.

- Compliance with LCO 3.2.1 and the performance of SR 4.2.1.1 for the thermal separation distance are not verified during the performance of this procedure because of the design of the DEFINED AREAS. All DEFINED AREAS are created specifically for receiving either a METAL CONTAINER or non-METAL CONTAINER and WCATS assures compliance by not authorizing a non-METAL CONTAINER to be moved into a METAL CONTAINER only DEFINED AREA. However, a METAL CONTAINER may be moved into a non-METAL CONTAINER DEFINED AREA because the thermal separation distance requirements of the non-METAL CONTAINER DEFINED AREA are greater that the thermal separation distance requirements of the METAL CONTAINER.

4. PREREQUISITE ACTIONS

NOTE *The prerequisite actions may be completed in any order.*

4.1 Planning and Coordination

Supervisor or designee

[1] **ENSURE** that the current revision of this document is available, and **IDENTIFY** this document as Working Copy or Information Only on the Title Page.

[2] **ENSURE** that the performance of this activity is scheduled on the TA-54 Area G facility schedule.

[3] **ENSURE** that an RWP for the planned activity has been issued.

[4] **ENSURE** that a pre-evolution briefing is conducted and documented for all personnel involved in the performance of this procedure, in accordance with EP-DIV-AP-0112, EWMO Pre-Job Briefings, or other approved process.

NOTE *Items that are to be lifted using rigging require the operations to be performed by an Incidental Operator and Rigger or Qualified Crane Operator and Rigger.*

[5] **ENSURE** that, as a minimum, the following personnel are available for performance of this procedure, as required:

- Radiological Control Technicians (RCTs) as required by RWP
- Two Waste Handling Operators
- One Person-In-Charge (e.g., supervisor)
- **($)** STATIONARY FIRE WATCH (SAC 5.7.17)

[6] **ENSURE** that a completed LTP Waste Remediation Safety Evaluation Data Sheet (EP-DIV-AP-20098 Attachment 1) has been obtained for each waste container to be processed in accordance with EP-DIV-AP-20098.

4.1 Planning and Coordination (continued)

NOTE *Typically remediation operations within the SSSR AREA will not involve the deliberate generation of sparks or flames and therefore a standing Spark- Or Flame-Producing Operations Permit is not required but instead a Spark- Or Flame-Producing Operations Permit will be generated on a case-by-case basis.*

[7] **IF** the SSSR activity requires the generation of sparks or flames (e.g., grinding, cutting, or burning),
THEN ENSURE that a Spark- Or Flame-Producing Operations Permit (Form 1563) and required signatures have been obtained in accordance with P101-26, Welding, Cutting, and Other Spark- or Flame-Producing Operations.

[8] **VERIFY** the following with the TA-54 Operations Center:
- DEFINED AREAS involved in the work activities are in the OPERATION MODE.
- Area G is in Staffing Condition 1 (one), as defined in EP-DIV-AP-20059, Watchbill Administration.

4.2 Materials and Equipment

WARNING

Before using any tools not listed in this section an evaluation of the items SHALL be performed to determine whether any new hazards are being introduced or new controls are necessary and to determine whether the associated hazard analysis requires updating in order to prevent personnel injury.

NOTE *The list of materials and equipment is not an all inclusive list and additional tools and equipment may be used as necessary.*

NOTE *Torque wrenches are calibrated either as a percentage of full scale or a percentage of indicated value. The torque wrench accuracy information is found on the Calibration Certificate document. Torque wrenches are not calibrated in, nor are they to be used below 20% of their full range.*

4.2.1 Measurement and Test Equipment (M&TE)

Waste Handling Operator

[1] **ENSURE** that the following measuring and test equipment are available, as required:
- Calibrated torque wrench capable of torqueing to a minimum of 0 to 17 ft-lb
- MultiRAE Monitor capable of measuring % LFL/LEL and oxygen

[2] **IF** an M&TE calibration date has expired,
THEN:

[A] **TAG** the M&TE Out-of-Service.

[B] **NOTIFY** supervision for the applicable actions.

[3] **IF** span gas is to be used,
THEN VERIFY that a 50% LEL Methane Span Gas is available for calibrating and performing a Bump Test of the MultiRAE Monitor.

[4] **DOCUMENT** the following for the MultiRAE Monitor on Attachment 2, TA-54 Area G TRU CMB Filtered Vent Installation Data Sheet:
- Serial number
- Calibration expiration date
- Accuracy (±)

4.2.2 Special Tools and Equipment

Waste Handling Operator

[1] **ENSURE** that the following special tools and equipment are available, as required:

- Certified hoisting and rigging equipment
- Certified Crane
- Certified wet/dry vacuum with a high efficiency particulate air (HEPA) filter and attachments
- Certified Local Exhaust Ventilation Unit (to be used as required by the RCT and RWP)
- Elephant trunks
- Flashlight
- Slow-speed metal size reduction tools (e.g., nibblers, shears, crimpers, and pipe wheel cutters)
- Vice grips or equivalent
- Grinder with grinding wheel or reciprocating saw with metal blade
- Non-sparking hand drill (hand crank or electric) with a speed selector that has a maximum speed of less than 640 rpm and drill bits
- Reciprocating saw and blades
- Tape measure or equivalent
- Miscellaneous hand tools (e.g., hammer and prying tool)
- Jigsaw and blades
- Portaban and blades
- Nibblers
- Face shield or equivalent
- Heat gun (for Heat Shrink Wrap™)
- WCATS mobile device
- Non-sparking tools to remove interior plug/vent
- Fire blankets, Metal X fire extinguishers, and ABC fire extinguishers (STATIONARY FIRE WATCH use)

4.2.3 Consumables

Waste Handling Operator

[1] **ENSURE** that the following consumables are available, as required:

- Kimwipes® or equivalent
- Personnel Protective Equipment as required by the industrial hygiene assessment and RWP
- Radiological protection (RP)-approved Tape
- Cut-Resistant Gloves (e.g., leather gloves or HexArmor®)
- Nitrile gloves

4.2.3 Consumables (continued)

- Cutting tool (e.g., utility knife)
- WIPP-approved filtered vent (e.g., NucFil 019 or NucFil 019DS)
- Radioactive labels
- All-in-One labels
- Type 7A 55-gal drums

- Approved waste disposal packaging (e.g., Heat Shrink Wrap™)
- Fire-retardant plastic sheeting
- Fixative
- Permanent marker or equivalent
- CMB material disposal area [e.g., 55-gal drum, metal crate (e.g., LB99) or metal pallet covered with plastic sheeting]
- B-25, B12, or similar container
- Calibration gas containing 50% LEL methane

4.3 Field Preparation

Supervisor or designee

[1] **ENSURE** that the applicable inspection sheet is completed for the work locations in accordance with EP-AREAG-FO-DOP-1087, TA-54 Work Release Inspection Sheet.

[2] **ENSURE** that the applicable round sheet has been completed:
- EP-AREAG-WO-DOP-0220, TA-54 Area G Building 412 Containment Tent Operator Round Sheet
- EP-AREAG-WO-DOP-1061, TA-54 Area G Dome 375 PermaCon Operator Round Sheet
- EP-AREAG-WO-DOP-1162, TA-54 Area G Dome 231 PermaCon Operator Round Sheet

[3] **IF** new equipment/tools are to be introduced into the SSSR AREA,
THEN ENSURE that the electrical equipment/tools satisfy the National Electric Code (NEC) or Underwriters Laboratories (UL) requirements (or equivalent) unless ESO approved and **DOCUMENT** initials, Z number, and date on Attachment 1, TA-54 Area G TRU CMB Processing Data Sheet.

4.3 Field Preparation (continued)

[4] **ENSURE** that the waste container (e.g., crate) to be processed has been moved to the applicable building/structure (e.g., Building 412, Dome 231, or Dome 375) and that any crate has been secured (e.g., nylon banding) to the crate handling equipment (e.g., castors), as necessary.

[5] **IF** performing SSSR activities in a radiological contamination control tent, **THEN:**

NOTE *In accordance with RP-1-DP-65, Radiological Containments, a containment tent that is in place for greater than 30 days* ***SHALL*** *be re-inspected by the Fire Protection Engineer at an interval* <u>*not*</u> *to exceed 45 days which is documented on the daily inspection checklist*

[A] **ENSURE** that the radiological contamination control tent has been inspected in accordance with RP-1-DP-65.

[B] **ENSURE** that activities outside of the radiological contamination control tent, such as forklift operations, have been minimized.

[6] **($) IF** combustible/flammable liquids are to be brought into an SSSR AREA, **THEN VERIFY** that the combustible/flammable liquids are authorized in accordance with EP-AREAG-FO-AP-1097, and **CHECK** (√) SAT, UNSAT, or N/A on Attachment 1. (LCO 3.3.1)

[7] **DOCUMENT** the following information on Attachment 1:
- CMB unique identifier number (each page of attachment)
- PE-Ci value of waste container
- PE-Ci Equivalent Combustible Waste value of waste container
- Applicable Hazard Category (HC) as a Radiological Activity or HC-2/3 Activity for required facility and associated PE-Ci limits
- Facility (e.g., 231, 375, or 412)

[8] **ENSURE** that the CMB to be processed has been moved to the applicable building/structure (e.g., Building 412, Dome 231, or Dome 375) and secured (e.g., nylon banding) to the handling equipment (e.g., castors), as necessary.

4.3 Field Preparation (continued)

CS

NOTE ***(*)*** *Debris contained in the vacuum systems for contamination control and CMB material from multiple CMBs may be placed into a single daughter container (e.g., 55-gal drum). (NCS-CSLA-13-001)*

[9] **ENSURE** that the CMB disposal area (e.g., 55-gal drum) has been prepared or that a previously initiated CMB disposal container is available, as applicable.

NOTE *The daughter waste containers (e.g., 55-gal drums and SWBs) may be prepared in advance of the waste container remediation activity and at a location other than the SSSR AREA. As such the lids may be temporarily placed on the daughter waste containers to allow them to be safely transported to the SSSR AREA.*

[10] **ENSURE** that a sufficient number of daughter waste containers (e.g., 55-gal drums) are available, as necessary, and have been prepared in accordance with EP-AREAG-WO-DOP-1069, TA-54 Area G TRU SWB/Drum Operations, in order to receive CMB material determined to have greater than 50,000 dpm alpha contamination (TRU waste material).

[11] **ENSURE** that the floor of the SSSR process area has been prepared (e.g., plastic sheeting laid down on the floor to collect any dropped items) to receive a waste container.

NOTE *Hole locations are to be selected based on available knowledge [e.g. Real-Time Radiography (RTR) images] to prevent penetrating the interior secondary containment.*

Supervisor or designee

[12] **MARK** two holes locations near the top of the CMB on the two long sides of the CMB to be cut with a permanent marker (total of 4 locations).

[13] **MARK** straight guidelines on the two long sides of the CMB that are to be cut with a permanent marker or equivalent.

5. INSTRUCTIONS—CORRUGATED METAL BOX MODIFICATION

This section is a stand-alone section and may be performed independently of, or in conjunction with other Instructions sections.

NOTE 1 *While performing the following steps a discovery that the interior secondary containment has been breached or that there is no interior secondary containment may dictate pausing the work activity.*

NOTE 2 *Radiological surveys may be performed as determined necessary [e.g., by an RP representative (e.g., RCT)] any time during the performance of this procedure.*

Waste Handling Operator

[1] **ENSURE** that the prerequisite actions have been completed.

[2] **ENSURE** that radiological surveys on personnel, waste (e.g., CMB material), and tooling are performed as necessary during the CMB modifications.

[3] **IF** radiological contamination is detected during the evolution,
THEN FOLLOW the direction of the RCT and the RWP.

NOTE *The following step may be repeated as necessary during the CMB processing and may be performed after moving a CMB into the SSSR process area.*

[4] **ENSURE** that the TRU daughter waste containers (e.g., 55-gal drums) have been moved into the SSSR process area, as necessary.

NOTE *The WCATS mobile device must be synchronized before and after performing an INTRA-FACILITY TRANSFER in order to ensure that the MAR inventory change is appropriately captured in WCATS.*

[5] **($) IF** moving a TRU CMB into the Dome TA-54-231 PermaCon, Dome TA-54-375 PermaCon, or Building TA-54-412 contamination enclosure (tent),
THEN ENSURE that the WCATS INTRA-FACILITY TRANSFER has been completed using a WCATS mobile device or desktop application. (SR 4.1.1)

[6] **CHOCK/LOCK** dollies, as necessary.

[7] **DETERMINE** whether an unobstructed vent is installed on the outside of the CMB.

[8] **IF** an unobstructed vent is **NOT** installed on the outside of the CMB,
THEN GO to Section 6, Filtered Vent Installation, and **RETURN** to the following step.

5. INSTRUCTIONS—CORRUGATED METAL BOX MODIFICATION (continued)

[9] **ENSURE** that negative ventilation (e.g., localized ventilation units and elephant trunks) has been established as close to the work area as possible, as directed by an RCT and the RWP.

[10] **ENSURE** that the debris (e.g., metal chips) collection system is initiated.

NOTE *The holes drilled into the CMB should be large enough to allow access for performing internal radiological surveys but yet small enough to permit the patching of the opening in the event of high contamination levels as determined by an RCT and the RWP.*

[11] **DRILL** an approximate 1/4 in. hole at one of the locations marked on the upper portion of the CMB ensuring that the drill bit does not penetrate the interior secondary containment.

[12] **ENSURE** that radiological surveys at the hole locations have been obtained.

[13] **IF** the radiological contamination is above the RWP hold point limits,
OR DIRECTED by supervision,
THEN:

[A] **COVER** the hole as directed by an RCT.

Supervisor

[B] **NOTIFY** the LTP-OCP Operations Manager or designee and the TA-54 Operations Center of the discrepancy, and **REQUEST** the applicable actions.

Waste Handling Operator

[C] **PROCEED** as directed by supervision/LTP-OCP Operations Manager or designee/TA-54 Operations Center.

[14] **REPEAT** Steps 5.[11] through 5.[13] until a hole has been drilled at each of the four locations marked on the upper portion of the CMB.

5. INSTRUCTIONS—CORRUGATED METAL BOX MODIFICATION (continued)

WARNING

1. **Control cut rate or forward pressure of power tools to avoid binding the electric motor in order to prevent personnel injury.**

2. **As the CMB is cut the loose CMB pieces may fall or present a pinching hazard resulting in personnel injury.**

3. **Wear leather gloves when extending or retracting extension ladders due to pinch points.**

[15] **ESTABLISH** negative ventilation (e.g., cutting an opening in an upper corner of the CMB).

[16] **CUT** the long-side of the CMB, starting at the opposite side of the CMB from the established negative ventilation, as directed by supervision (e.g., straight line drawn on CMB to ensure a straight cut) ensuring that the interior secondary containment is <u>not</u> penetrated.

[17] **VISUALLY INSPECT** the CMB interior to determine whether the interior secondary containment has been breached.

[18] **IF** there is no interior secondary containment,
OR the interior secondary containment has been breached,
THEN:

[A] **($) PERFORM** <u>one</u> of the following: (SAC 5.7.17)
- **STATION** a STATIONARY FIRE WATCH to observe the exposed area
- **COVER** the exposed area with fire retardant material (e.g., fire blanket)

5. INSTRUCTIONS—CORRUGATED METAL BOX MODIFICATION (continued)

[B] **NOTIFY** supervision, the LTP-OCP Operations Manager or designee, and Environmental Professional of the CMB condition, and **REQUEST** the applicable actions.

[19] **ENSURE** that radiological surveys of the exposed area are performed, as necessary.

[20] **IF** the radiological contamination is above the RWP hold point limits,
AND the condition **CANNOT** be corrected as directed by the RCT,
THEN:

[A] **COVER** the location as directed by an RCT.

[B] **NOTIFY** supervision of the discrepancy.

Supervisor

[C] **NOTIFY** the LTP-OCP Operations Manager or designee and the TA-54 Operations Center of the discrepancy, and **REQUEST** the applicable actions.

Waste Handling Operator

[D] **PROCEED** as directed by supervision/LTP-OCP Operations Manager or designee/TA-54 Operations Center.

[21] Repeat Steps 5.[15] through 5.[20] for the second long-side of the CMB.

NOTE *A radiological measurement (fixed plus removable) of greater than 50,000 dpm alpha contamination indicates that the material is TRU waste and therefore the entire CMB may be required to be dispositioned as TRU waste.*

[22] **IF** the total contamination survey (fixed plus removable) indicates greater than 50,000 dpm alpha contamination,
THEN NOTIFY supervision, the LTP-OCP Operations Manager or designee, and Engineering of the CMB condition, and **REQUEST** the applicable actions.

5. INSTRUCTIONS—CORRUGATED METAL BOX MODIFICATION (continued)

NOTE 1 *The CMB disposal area is where facility-generated waste is accumulated in metal containers. It is considered Low-Level Waste (LLW) and is not to be counted against the SSSR AREA MAR inventory as long as waste is added from a single parent container and not stored.*

CS **NOTE 2** ***(*)*** *Debris contained in the vacuum systems for contamination control, and CMB material from multiple CMBs, may be placed into a single daughter container (e.g., 55-gal drum). (NCS-CSLA-13-001)*

[23] **PLACE** the removed portion of the CMB with less than or equal to 50,000 dpm alpha contamination (fixed plus removable) in the CMB disposal container (e.g., 55-gal drum) or into the opening in the CMB ensuring that the interior secondary containment is not breached, as directed by supervision.

NOTE *The measured diagonal distance plus the thickness of the seal (e.g., plastic and tape) to be applied later must be less than or equal to 65-1/4 in. in order for the CMB to be placed into a TDOP.*

[24] **DETERMINE** whether the CMB can be placed into an overpack by measuring the distance diagonally across the CMB from one corner to another corner.

[25] **IF** the diagonal distance across the CMB is greater than 65 in.,
AND additional CMB material **CANNOT** be removed without breaching the interior secondary containment,
THEN NOTIFY supervision and the LTP-OCP Operations Manager or designee of the CMB condition, and **REQUEST** the applicable actions.

[26] **IF** the diagonal distance across the CMB is greater than 65 in.,
OR the cut edge of the CMB bows outward from the center of the CMB,
AND additional CMB material can be removed without breaching the interior secondary containment,
THEN GO to Step 5.[15].

5. INSTRUCTIONS—CORRUGATED METAL BOX MODIFICATION (continued)

WARNING

Sharp edges of the CMB cuts SHALL be covered (e.g., flashing, tape, or robust plastic) before using shrink wrap in order to protect the shrink wrap from being breached an allowing a possible radiological contamination release.

[27] **SEAL** (e.g., plastic, flashing, shrink wrap, or tape) the OPEN sides of the CMB as directed by supervision and an RCT.

[28] **DETERMINE** whether the CMB can be placed into an overpack by measuring the distance diagonally across the CMB from one corner to another corner (including the thickness of the sealing material).

[29] **IF** the diagonal distance across the CMB (including the thickness of the sealing material) is greater than 65-1/4 in.,
THEN NOTIFY supervision and the LTP-OCP Operations Manager or designee of the CMB condition, and **REQUEST** the applicable actions.

[30] **ENSURE** that any material that may have fallen onto the floor (plastic sheeting) has been retrieved and placed into an appropriate (CMB, TRU or CMB disposal container) daughter waste container (e.g., 55-gal drum), as applicable.

[31] **IF** directed by supervision or an RCT,
THEN FOLD the plastic sheeting that was laid on the floor and **PLACE** the plastic sheeting into an appropriate (TRU or CMB disposal container) daughter waste container (e.g., 55-gal drum).

NOTE 1 *Steps 5.[32] and 5.[33] may be performed concurrently or in any sequence.*

NOTE 2 *Steps 5.[32] through 5.[37] may be performed as necessary to allow for the closing and removal of individual TRU daughter waste containers from the SSSR AREA as the individual TRU daughter waste containers are filled.*

[32] **ENSURE** that TRU daughter waste containers (e.g., 55-gal drum) are closed in accordance with EP-AREAG-WO-DOP-1069, as applicable.

5. INSTRUCTIONS—CORRUGATED METAL BOX MODIFICATION (continued)

[33] **ENSURE** that the TRU daughter waste containers (e.g., 55-gal drum) are labeled with a shorty label in accordance with EP-DIV-DOP-20043, LTP TRU Waste Container Labeling, as applicable.

[34] **DOCUMENT** the following LLW daughter waste container information on Attachment 1:

- Unique identifiers
- **CIRCLE** the type of waste container or **RECORD** the daughter waste container type on Attachment 1.

NOTE *Individual closed TRU daughter waste containers may be removed from the SSSR AREA as the individual TRU daughter waste containers are closed.*

[35] **IF** a TRU daughter waste container was generated,
THEN:

NOTE *The WCATS mobile device must be synchronized before and after performing an INTRA-FACILITY TRANSFER in order to ensure that the MAR inventory change is appropriately captured in WCATS.*

CS

[A] **(*) ENSURE** that all TRU WASTE [e.g., the TRU daughter waste containers (55-gal drums)] is moved out of the SSSR process area into the staging area using the WCATS INTRA-FACILITY TRANSFER function.
(NCS-CSLA-13-001)

5. INSTRUCTIONS—CORRUGATED METAL BOX MODIFICATION (continued)

NOTE 1 *The Hazardous Waste Codes for the daughter container must be updated for hazardous waste items identified during the remediation of a parent waste container that were not previously identified and the hazardous waste is placed into a daughter container. Additionally, the Hazardous Waste Code for hazardous waste that is remediated or not placed into a daughter waste container is not carried forward to the daughter waste container. The WMC can assist with assigning the appropriate RCRA Hazardous Waste Codes to the daughter container.*

NOTE 2 *The following step may be performed out of sequence.*

[C] **ENSURE** that the TRU daughter waste containers are labeled in accordance with EP-DIV-DOP-20043.

CS

NOTE 1 ***(*)*** *Debris contained in the vacuum systems for contamination control and CMB material from multiple CMBs may be placed into a single daughter container (e.g., 55-gal drum).- (NCS-CSLA-13-001)*

NOTE 2 *CMB disposal containers are not required to be closed in accordance with the manufacturer's instructions if being used for disposal of additional CMB material.*

NOTE 3 *Steps 5.[36] through 5.[43] may be performed as necessary and out-of-sequence in order to permit the disposition of CMB material disposal containers as the containers are filled or no longer needed.*

[36] **ENSURE** that the CMB material has been placed into a CMB disposal container.

[37] **CLOSE** the CMB disposal container.

NOTE *The WCATS mobile device must be synchronized before and after performing an INTRA-FACILITY TRANSFER in order to ensure that the MAR inventory change is appropriately captured in WCATS.*

[38] **IF** the CMB disposal container is FULL or **NOT** to be reused,
OR there is TRU WASTE inside of the CMB disposal container,
THEN ENSURE that CMB disposal containers (e.g., 55-gal drum) are moved out of the SSSR process area using the WCATS INTRA-FACILITY TRANSFER function.

5. INSTRUCTIONS—CORRUGATED METAL BOX MODIFICATION (continued)

[39] **ENSURE** that CMB disposal container has been labeled in accordance with P930-1, LANL Waste Acceptance Criteria.

WARNING

1. **Strapping material contains sharps edges that will cause cuts and lacerations to hands if <u>not</u> properly protected. Operators are required to use appropriate hand protection (leather gloves) when handling strapping.**

2. **The seal (e.g., plastic or tape) used to close openings in the CMB is to be protected (e.g., flashing) from the sharp edges of the banding material to prevent breaching the seal.**

[40] **ENSURE** that a single strap of banding material has been attached around the CMB at center of the long-side of the CMB while protecting (e.g., flashing under the banding) the CMB sealing material from the banding.

NOTE *The WCATS mobile device must be synchronized before and after performing an INTRA-FACILITY TRANSFER in order to ensure that the MAR inventory change is appropriately captured in WCATS.*

CS [41] **($) (*) ENSURE** that the CMB is moved out of the contamination enclosure into the SSSR AREA staging area using the WCATS INTRA-FACILITY TRANSFER function. (SR 4.1.2 and NCS-CSLA-13-001)

CS **NOTE** ***(*)*** *Debris contained in the vacuum systems for contamination control and CMB material from multiple CMBs may be placed into a single daughter container (e.g., 55-gal drum). (NCS-CSLA-13-001)*

[42] **IF** the CMB disposal container is to be reused,
THEN STAGE the CMB disposal container as directed by supervision.

6. INSTRUCTIONS—FILTERED VENT INSTALLATION

This section is a stand-alone section and may be performed independently of, or in conjunction with other Instructions sections.

NOTE *Radiological surveys may be performed as determined necessary [e.g., by an RP representative (e.g., RCT)] any time during the performance of this procedure.*

Supervisor or Waste Handing Operator

[1] **ENSURE** that the prerequisite actions have been completed.

[2] **ENSURE** that the appropriate PPE (e.g., respiratory protection) has been donned in accordance with applicable RWP and IHS requirements.

Waste Handling Operator

[3] **RECORD** the CMB unique identifier (each page) on Attachment 2, TA-54 Area G CMB Filtered Vent Installation Data Sheet.

[4] **ENSURE** that negative ventilation (e.g., localized ventilation units and elephant trunks) has been established as close to the work area, as possible, as directed by an RCT and the RWP.

Supervisor or designee

[5] **ENSURE** that no hot work or other potential spark/flame initiators are being performed in an SSSR AREA and that the SSSR AREA is posted to prevent the performance of hot work or other potential spark/flame initiation activities during the venting of the CMB, and **CHECK** (√) SAT or UNSAT on Attachment 2.

6. INSTRUCTIONS—FILTERED VENT INSTALLATION (continued)

WARNING

1. **Pipe plugs are to be removed slowly to allow the CMB pressure to be slowly released in order to prevent the potential for the pipe plug from becoming a projectile and resulting in personnel injury.**

2. **The CMB is to be observed for pressurization during the venting processes and all work activities are to be stopped if pressurization is identified in order to allow any trapped gases to be vented and preventing a potential deflagration which could result in personnel injury.**

NOTE 1 *Non-sparking hand tools are to be used for removing the CMB plug.*

NOTE 2 *Step 6.[13] may be performed in conjunction with the following step in addition to being performed in sequence in order to obtain an initial LEL/LFL value.*

Waste Handling Operator

[6] **IF** a pipe plug or obstructed filter vent is installed in the CMB,
THEN SLOWLY REMOVE the pipe plugs or filtered vent from the filter port.

[7] **DETERMINE** whether an obstruction (e.g., pipe plug or obstructed filtered vent) is in the CMB bunghole.

[8] **IF** an obstruction is in the CMB bunghole,
THEN:

[A] **ENSURE** that negative ventilation (e.g., localized ventilation units and elephant trunks) has been established as close to the work area as possible, as directed by an RCT and the RWP.

6. INSTRUCTIONS—FILTERED VENT INSTALLATION (continued)

[B] **OBTAIN** a non-sparking electric hand drill with an approximate 1/4 in. bit installed.

[C] **ENSURE** that the depth of the hole to be drilled is marked (e.g., tape) on the drill bit.

NOTE *The maximum safe drill speed of 640 rpm has been established by AREAG-CALC-00224, DVS Cold Drilling Assessment, as a non-sparking process.*

[D] **DRILL**, using a drill speed selector set for less than 640 rpm, a hole through the obstruction.

[E] **ENSURE** that radiological surveys have been obtained.

[F] **IF** the radiological contamination is above the RWP hold point limits,
OR DIRECTED by supervision,
THEN:

[a] **COVER** the hole as directed by an RCT.

Supervisor

[b] **NOTIFY** the LTP-OCP Operations Manager or designee and the TA-54 Operations Center of the discrepancy, and **REQUEST** the applicable actions.

Waste Handling Operator

[c] **PROCEED** as directed by supervision/LTP-OCP Operations Manager or designee/TA-54 Operations Center.

[9] **RECORD** the CMB venting start time on Attachment 2.

[10] **WHEN** greater than or equal to 30 min. has elapsed,
THEN RECORD the time that the venting was stopped on Attachment 2.

[11] **DETERMINE** whether the CMB vented for greater than or equal to 30 min., and
CHECK (√) SAT or UNSAT on Attachment 2.

6. INSTRUCTIONS—FILTERED VENT INSTALLATION (continued)

[12] **ENSURE** that sampling atmosphere for the MultiRAE Monitor is within the design of sampling monitor (i.e., no vehicle/forklift exhaust).

NOTE 1 *MultiRAE Monitor measures in %LEL. A 100% reading on the MultiRAE Monitor calibrated to methane is equivalent to approximately 110% of the LEL for hydrogen gas (i.e., 4% hydrogen). (The LFL/LEL for hydrogen gas is approximately 4% hydrogen gas by volume [measures as approximately 91% LEL on the MultiRAE]) The permissible measured LEL level has been reduced to 25% in order to compensate for the hydrogen correction factor, temperature fluctuations, sampling error, and to provide an acceptable margin of safety.*

NOTE 2 *For the purposes of this procedure LFL and LEL values are the same.*

[13] **MEASURE** the %LEL and % oxygen at the CMB bunghole using the identified MultiRAE Monitor, and **RECORD** the %LEL and % oxygen on Attachment 2.

[14] **CHECK** (√) SAT or UNSAT on Attachment 2 to indicate whether the measured %LEL and % oxygen satisfy the following criteria at the CMB bunghole:

- Less than 25% LEL hydrogen
- Greater than or equal to 10% oxygen

[15] **IF** UNSAT was checked (√) in the previous step,
THEN:

[A] **STOP** the work activity.

[B] **NOTIFY** the TA-54 Operations Center and the LTP-OCP Operations Manager of the waste container condition, and **REQUEST** the applicable actions.

[C] **PERFORM** actions as directed by the LTP-OCP Operations Manager.

6. INSTRUCTIONS—FILTERED VENT INSTALLATION (continued)

[16] **IF** an unobstructed filtered vent is installed in the CMB bunghole from the inside of the CMB,
THEN GO to Step 5.[9].

WARNING

Due to skin irritation hazard, nitrile gloves SHALL be worn when applying lubricating oil (e.g., WD-40 or equivalent).

NOTE *Lubricating oil (i.e., WD-40 or equivalent) may be used for cleaning of threads.*

[17] **CLEAN** the threads of the WIPP-approved filtered vents or vent port, as necessary.

[18] **OBTAIN** a WIPP-approved filtered vent (e.g., NucFil-019DS).

[19] **IF** WIPP-approved filtered vents have either an NPT or an American National Straight Pipe Thread for Mechanical Joints (NPSM) threaded body,
THEN REMOVE the rubber gaskets, if desired.

WARNING

Due to skin allergen hazard, nitrile, pylox, or trionic gloves SHALL be worn when applying Loctite®.

[20] **APPLY** a thread-locker (e.g., Loctite® 271 or Loctite® 680) to the first three threads of the WIPP-approved filtered vent.

[21] **ENGAGE** the threads of the WIPP-approved filtered vent in the 3/4 in. plug hole.

NOTE *The number of engaged threads can be determined by counting two full rotations of the WIPP-approved filtered vent.*

[22] **HAND SCREW** the WIPP-approved filtered vent into the 3/4 in. plug hole until a minimum of two WIPP-approved filtered vent threads are engaged in the plug hole.

6. INSTRUCTIONS—FILTERED VENT INSTALLATION (continued)

[23] **IF** a WIPP-approved filtered vent **CANNOT** be installed with a minimum of two threads engaged in the plug hole,
THEN:

[A] **REMOVE** the WIPP-approved filtered vent.

WARNING

Tapping threads can create sharp burrs and edges. Wear leather gloves and safety glasses with side shields or equivalent when tapping threads.

[B] **TAP** the plug hole using the appropriate size tap (e.g., 3/4-14 in. NPSM or 3/4-14 in. NPT thread tap).

[C] **REPEAT** Steps 6.[17] through 6.[23].

NOTE *The following step may be performed out of sequence.*

[24] **RECORD** the WIPP-approved filtered vent torque wrench information on Attachment 2.

[25] **TORQUE** the WIPP-approved filtered vents to a nominal 15 ft-lb (13 to 17 ft-lb), and **RECORD** the actual torque values on Attachment 2.

NOTE *The following step may be performed out of sequence.*

[26] **RECORD** the WIPP-approved filtered vent information on Attachment 2.

[27] **REMOVE** all excess thread-locker (e.g., Loctite® 271 or Loctite® 680) from the exterior of the packaging.

[28] **ENSURE** that a TRU Waste Storage Record Change Form (Form 2177) is initiated for the new filtered vents.

[29] **IF** this section was entered from Section 5, Corrugated Metal Box Modification, **THEN GO** to Step 5.[9].

7. INSTRUCTIONS—SECURING ENCLOSURE WITH IN-PROCESS WASTE CONTAINER

This section is a stand-alone section and may be performed independently of, or in conjunction with other Instruction sections of this procedure.

This section must be performed any time that an in-process CMB is to be left unattended inside of the contamination control enclosure for an extended period of time such as at the end of a shift when the in-process waste container is to be left unattended overnight.

NOTE *Radiological surveys may be performed as determined necessary [e.g., by an RP representative (e.g., RCT)] any time during the performance of this procedure.*

Waste Handling Technician

[1] **ENSURE** that loose waste material from the CMB modification process (e.g., Kimwipes® and CMB material) has been placed in the CMB disposal container (e.g., 55-gal drum) and that the CMB disposal container has been closed <u>or</u> that the loose waste material has been placed into the opening in the CMB ensuring that the interior secondary containment is <u>not</u> breached, as directed by supervision.

[2] **ENSURE** that the open portions of the CMB have been secured as directed by an RCT in order to minimize the spread of radiological contamination (e.g., covering the CMB with fire-retardant plastic).

[3] **ENSURE** that all equipment used to modify the CMB have been placed in a safe condition (e.g., electrical equipment deenergized and unplugged), as applicable.

[4] **NOTIFY** the TA-54 Operations Center of the waste container and contamination control enclosure status (e.g., CMB is partially modified and has been placed in a safe condition to minimize the spread of radiological contamination), and **REQUEST** the TA-54 Operations Center notify an Environmental Professional of the waste container status.

7. INSTRUCTIONS—SECURING ENCLOSURE WITH IN-PROCESS WASTE CONTAINER (continued)

NOTE *TRU WASTE outside of a container is considered exposed, and a STATIONARY FIRE WATCH is required within the contamination enclosure of the SSSR AREA when TRU WASTE is exposed. TRU WASTE that is covered by a fire blanket or other fire retardant material is considered sufficiently protected from a fire and is not considered exposed.*

[5] **($) IF** exposed TRU WASTE is present,
THEN ENSURE that one of the following has been performed, and **DOCUMENT** on Attachment 1: (SAC 5.7.17)

[A] **ENSURE** that all exposed waste material has been covered by a fire blanket or other fire retardant material.

[B] **ENSURE** that a STATIONARY FIRE WATCH has been established within the contamination enclosure of the SSSR AREA.

[6] **VERIFY** that the following applicable air movers are ON and that the applicable HEPA filter DP reading for each air mover is within the required range, and **DOCUMENT** the results on Attachment 1:

Facility	Air Mover	Required HEPA DP (in. wc)
Dome TA-54-231 PermaCon	AM-01	≥ 0.5 to ≤ 2.5
	AM-02	
	AM-03	
	AM-08	
Building TA-54-412 Enclosure	AM-01	≥ 0.5 to ≤ 3.5
	AM-02	
	AM-03	
Dome TA-54-375 PermaCon	PDI-003	≥ 1.0 to ≤ 2.5
	PDI-004	

[7] **($) VERIFY** that all combustible/flammable liquids are removed from the SSSR AREA are ATTENDED, and **CHECK** (√) SAT or UNSAT on Attachment 1. (LCO 3.3.1)

7. INSTRUCTIONS—SECURING ENCLOSURE WITH IN-PROCESS WASTE CONTAINER (continued)

[8] **($) VERIFY** that all FUEL PACKAGES are either removed from the SSSR AREA or satisfy one of the following LCO 3.2.2 requirements, and **CHECK** (√) SAT or UNSAT on Attachment 1.

- FUEL PACKAGES are ATTENDED
- FUEL PACKAGES are less than or equal to 100 lb of TRANSIENT COMBUSTIBLE material, are greater than or equal to 9 ft away from non-metal waste containers and other FUEL PACKAGES, and are greater than or equal to 3 ft away from METAL CONTAINERS

8. POST-PERFORMANCE ACTIVITIES

8.1 Disposition

Waste Handling Operator

[1] **SIGN** and **DATE** the applicable attachments.

Supervisor or designee

[2] **REVIEW** the applicable attachments for accuracy and completeness.

[3] **IF** any deficiencies were identified,
THEN INITIATE actions to correct the deficiency [e.g., Facility Service Request (FSR) System], and **DOCUMENT** the actions taken (e.g., FSR Issue Number) in the Comments section of the applicable attachments.

[4] **SIGN** and **DATE** the applicable attachments, and **ENSURE** that any SCO acceptable knowledge documentation is attached to the applicable attachment.

[5] **($) ENSURE** that all flammable liquids have been removed from the SSSR AREA in accordance with EP-AREAG-FO-AP-1097. (LCO 3.3.1)

[6] **($) VERIFY** that all FUEL PACKAGES are either removed from the SSSR AREA or meet the requirements of LCO 3.2.2.

[7] **($) IF** exposed TRU WASTE is present,
THEN ENSURE that <u>one</u> of the following has been performed: (SAC 5.7.17)

[A] **ENSURE** that all exposed waste material has been covered by a fire blanket or other fire retardant material, **OR**

[B] **ENSURE** that a STATIONARY FIRE WATCH has been established within the contamination enclosure of the SSSR AREA.

8.1 Disposition (continued)

NOTE *The Shift Operations Supervisor (SOS)/Shift Operations Manager (SOM) review may be obtained at the end of a shift/day following the processing of multiple CMBs.*

SOS/SOM or designee

[8] **IF** Attachment 1 was completed,
THEN:

[A] **REVIEW** the applicable attachments for accuracy and completeness.

[B] **CHECK** (√) YES or NO to indicate whether the applicable acceptance criteria are satisfied on the applicable attachments.

[C] **IF** the applicable acceptance criteria are **NOT** satisfied,
THEN:

[a] **ENSURE** that the applicable TSR actions have been implemented.

[b] **ENSURE** that the actions of EP-DIV-AP-13, WDP TSR-Related Operational Limits Actions Compliance Tracking, have been implemented.

[c] **ENSURE** that the SOM and EWMO-FOD have been notified of the discrepancy.

[D] **PRINT** and **SIGN** name, **RECORD** Z number, and **DATE/TIME** on the applicable attachments.

8.1 Disposition (continued)

NOTE 1 *Support-Services Subcontractors are not required to perform a Post-Job Review.*

NOTE 2 *Completing a Post-Job Review may be accomplished using the applicable P300 form or online (the preferred method since the institution has access to feedback and lessons learned* http://int.lanl.gov/safety/iwmc/ *[Click on the Submit IWD Part 4 Post-Job Review]).*

Supervisor or designee

[9] **IF** this procedure is categorized as a moderate or high/complex activity and any of the following occur:

- An activity was completed for the first time
- A request was made by anyone involved with the performance of this procedure to perform a post-job review
- An abnormal event occurred
- A revision to an existing procedure was issued and it has been determined by the procedure owner or designee that a Post-Job Review is required,

THEN PERFORM a Post-Job Review in accordance with P300.

[10] **IF** the Post-Job Review identified any necessary changes to this procedure, **THEN INITIATE** a revision to this procedure.

8.2 Records Processing

Supervisor or designee

[1] Disposition records in accordance with the following:

Record Identification	Record Type Determination	Protection/Storage Method	Processing Instructions
Attachment 1, TA-54 Area G TRU CMB Processing Data Sheet Attachment 2, TA-54 Area G TRU CMB Filtered Vent Installation Data Sheet	Quality Assurance (QA) Record	Supervision **MUST** implement a reasonable level of protection to prevent loss and degradation. Records should be maintained in a one-hour fire rated metal file cabinet when not in use.	When the records are ready for final disposition, the record is transferred to Records Management in accordance with EP-DIR-AP-10003, Record Management Procedure For ADEP Employees.

9. REFERENCES

AREAG-CALC-00224, DVS Cold Drilling Assessment

DOE/WIPP 11-3384, CBFO Approved Filter Vents

EP-AREAG-FO-AP-1097, TA-54 Area G Combustible/Flammable Liquid Control

EP-AREAG-FO-DOP-1087, TA-54 Work Release Inspection Sheet

EP-AREAG-WO-DOP-1162, TA-54 Area G Dome 231 PermaCon Operator Round Sheet

EP-AREAG-WO-DOP-0220, TA-54 Area G Building 412 Containment Tent Operator Round Sheet

EP-AREAG-WO-DOP-1069, TA-54 Area G TRU SWB/Drum Operations

EP-AREAG-WO-DOP-1061, TA-54 Area G Dome 375 PermaCon Operator Round Sheet

EP-DIV-AP-20059, Watchbill Administration

EP-DIV-AP-20098, LTP TRU Waste Remediation Safety Evaluation

EP-DIV-AP-13, WDP TSR-Related Operational Limits Actions Compliance Tracking

EP-DIV-DOP-20043, LTP TRU Waste Container Labeling

EP-DIV-AP-0112, EWMO Pre-Job Briefings

EP-DIV-POLICY-20057, EWMO Health and Safety Policy – Manual Movement

EP-DIR-AP-10003, Record Management Procedure For ADEP Employees

NCS-CSLA-13-001, Waste Container Remediation and Repackaging

P101-18, Procedure for Pause/Stop Work

9. REFERENCES (continued)

P101-26, Welding, Cutting, and Other Spark- or Flame-Producing Operations

P300, Integrated Work Management

P330-6, Nonconformance Reporting

P930-1, LANL Waste Acceptance Criteria

RP-1-DP-65, Radiological Containments

ATTACHMENT 1
Page 1 of 3

TA-54 AREA G TRU CMB PROCESSING DATA SHEET

4.3[7] CMB unique identifier: _____

PE-Ci Value: _____ PE-Ci

PE-Ci Equivalent Combustible Waste Value: _____ PE-Ci

Activity Hazard Category Requirement:

☐ Radiological (< 0.52 PE-Ci)

☐ HC-2/3 (≤ 18 PE-Ci Equivalent Combustible Waste)

Facility ☐ TA-54-231 ☐ TA-54-375 ☐ TA-54-412

4.3[3] Electrical equipment/tools satisfy the National Electric Code (NEC) or Underwriters Laboratories (UL) requirements (or equivalent) or have been ESO approved: ☐ N/A

_____ / _____	_____ / _____	_____ / _____
Initials / Z# Date	Initials / Z# Date	Initials / Z# Date

4.3[6] **($)** Combustible/flammable liquids are authorized (i.e., ATTENDED and total volume is less than or equal to 100 gal.) (LCO 3.3.1)

☐ SAT	☐ UNSAT	☐ N/A	☐ SAT	☐ UNSAT	☐ N/A
☐ SAT	☐ UNSAT	☐ N/A	☐ SAT	☐ UNSAT	☐ N/A
☐ SAT	☐ UNSAT	☐ N/A	☐ SAT	☐ UNSAT	☐ N/A

5.[34] Daughter waste containers:

Circle One	Unique Identifier
B-12/B-25/SWB/55-gal drum	_____
B-12/B-25/SWB/55-gal drum	_____
B-12/B-25/SWB/55-gal drum	_____

7.[5] **($)** One of the following exists: (SAC 5.7.17) ☐ N/A

- Exposed waste material covered by a fire blanket or other fire retardant material
- STATIONARY FIRE WATCH established inside of the SSSR process area

_____ / _____	_____ / _____	_____ / _____
Initials / Z# Date	Initials / Z# Date	Initials / Z# Date
_____ / _____	_____ / _____	_____ / _____
Initials / Z# Date	Initials / Z# Date	Initials / Z# Date

ATTACHMENT 1
Page 2 of 3

4.3[7] CMB unique identifier: _____

Date/Time (7.[6])	Facility (7.[6])	Air Mover	Required HEPA DP (in. wc)	Air Mover Status (7.[6])	Required HEPA DP (in. wc) (7.[6])
	☐ Dome TA-54-231 PermaCon	AM-01/ AM-02/ AM-03/ AM-08	≥ 0.5 to ≤ 2.5	☐ ON ☐ OFF ☐ N/A	☐ SAT ☐ UNSAT ☐ N/A
				☐ ON ☐ OFF ☐ N/A	☐ SAT ☐ UNSAT ☐ N/A
				☐ ON ☐ OFF ☐ N/A	☐ SAT ☐ UNSAT ☐ N/A
				☐ ON ☐ OFF ☐ N/A	☐ SAT ☐ UNSAT ☐ N/A
	☐ Building TA-54-412 Enclosure	AM-01/ AM-02/ AM-03	≥ 0.5 to ≤ 3.5	☐ ON ☐ OFF ☐ N/A	☐ SAT ☐ UNSAT ☐ N/A
				☐ ON ☐ OFF ☐ N/A	☐ SAT ☐ UNSAT ☐ N/A
				☐ ON ☐ OFF ☐ N/A	☐ SAT ☐ UNSAT ☐ N/A
	☐ Dome TA-54-375 PermaCon	PDI-003/ PDI-004	≥ 1.0 to ≤ 2.5	☐ ON ☐ OFF ☐ N/A	☐ SAT ☐ UNSAT ☐ N/A
				☐ ON ☐ OFF ☐ N/A	☐ SAT ☐ UNSAT ☐ N/A
				☐ ON ☐ OFF ☐ N/A	☐ SAT ☐ UNSAT ☐ N/A

7.[7] **($)** Combustible/flammable liquids have been removed from SSSR AREA or are ATTENDED (LCO 3.3.1)

_____ / _____	_____ / _____	_____ / _____
Initials / Z# Date	Initials / Z# Date	Initials / Z# Date
_____ / _____	_____ / _____	_____ / _____
Initials / Z# Date	Initials / Z# Date	Initials / Z# Date

7.[8] **($)** FUEL PACKAGES have been removed from the SSSR AREA or satisfy <u>one</u> of the following LCO 3.2.2 requirements:

- FUEL PACKAGES are ATTENDED
- FUEL PACKAGES are less than or equal to 100 lb of TRANSIENT COMBUSTIBLE material, are greater than or equal to 9 ft away from non-metal waste containers and other FUEL PACKAGES, and are greater than or equal to 3 ft away from METAL CONTAINERS

_____ / _____	_____ / _____	_____ / _____
Initials / Z# Date	Initials / Z# Date	Initials / Z# Date
_____ / _____	_____ / _____	_____ / _____
Initials / Z# Date	Initials / Z# Date	Initials / Z# Date

ATTACHMENT 1
Page 3 of 3

4.3[7] CMB unique identifier: _____

Comments: _____

8.1[1] Performed By: _____ / _____ / _____ / _____
Operator (Print) Signature Z # Date

8.1[4] Reviewed By: _____ / _____ / _____ / _____
Supervisor/Designee (Print) Signature Z # Date

8.1[8][B] Acceptance criteria satisfied: ☐ YES ☐ NO

8.1[8][D]
Approved by: _____ / _____ / _____ / _____ / _____
SOS/SOM or designee (print) Signature Z # Date Time

ATTACHMENT 2
Page 1 of 2

TA-54 AREA G CMB FILTERED VENT INSTALLATION DATA SHEET

6.[3] CMB unique identifier: _____

4.2.1[4] MultiRAE Monitor information:
Serial No.: _____
Cal. Exp. Date: _____
Accuracy (±): _____

Calibration within 30 days, Bump Check within 10%: ☐ SAT ☐ UNSAT

6.[5] No hot work or other spark/flame initiators are being performed in SSSR AREA and SSSR AREA posted to prevent these activities
☐ SAT ☐ UNSAT

6.[9] Time CMB venting started: _____ min.

6.[10] Time CMB venting stopped: _____ min.

6.[11] CMB vented for ≥ 30 minutes: ☐ SAT ☐ UNSAT

6.[13] CMB bunghole %LEL and % Oxygen:
Measured % LEL _____ %
Measured % Oxygen _____ %

6.[14] Measured %LEL Hydrogen < 25% and % Oxygen ≥ 10% at CMB bunghole: ☐ SAT ☐ UNSAT

ATTACHMENT 2
Page 2 of 2

6.[3] CMB unique identifier: _____

6.[24] Torque wrench information:

- M&TE No.: _____
- Cal. Expiration Date: _____
- Tolerance: _____

- Torque wrench listed above is within the acceptable ranges as displayed on the calibration certificate. ☐ YES ☐ NO

6.[25] Filtered vent torque value [15 ft-lb (13 to 17 ft-lb)]: _____ ft-lb

6.[26] WIPP-approved filtered vent information:
Manufacturer: _____
Model No.: _____
Serial No.: _____
Manufacture Date: _____

Comments: _____

8.1[1] Performed By: _____ / _____ / _____ / _____
Operator (print) Signature Z # Date

8.1[4] Reviewed By: _____ / _____ / _____ / _____
Supervisor or designee (print) Signature Z # Date

EP-AREAG-WO-DOP-1159, TA-54 Area G Ten-Drum Overpack Container Operations

LAUR-14-24890

TA-54 Area G Ten-Drum Overpack Container Operations

Effective Date: 02/21/14

Hazard Class:	☐	Low	☒	Moderate	☐	High/Complex
Usage Mode:	☐	Reference	☒	UET	☐	Both UET & Reference

The Responsible Manager has determined that the following organizations' review/concurrence is required for the initial document, and for major revisions a same type and level review is required. Review documentation is contained in the Document History File:

- Engineering
- Quality Assurance
- Radiation Protection
- Industrial Hygiene and Safety
- Shift Operations Manager
- Packaging and Transportation
- Support-Services Subcontractor
- Subject-Matter Expert
- Environmental
- Central Characterization Program

Responsible Manager, LTP-OCP Operations Manager

Name (print)	Z#	Signature	Date
Paul Newberry	112056	/s/ Paul Newberry	02/13/14

Classification Review: ☐ N/A ☒ Unclassified ☐ UCNI ☐ Classified _____

Name (print)	Z#	Signature	Date
Art Crawford	080070	/s/ Art Crawford	02/13/14

Working Copy / Information Only (circle one)

Initials / Date: _____ / _____

This document fully satisfies the requirements of Integrated Work Management in order to systematically describe the work activity, the associated hazards, and the controls that **MUST** be employed to mitigate the risks.

REVISION HISTORY

Document Number	Issue Date	Action	Description
EP-AREAG-WO-DOP-1159, R.0	August 8, 2013	New document	New document.
EP-AREAG-WO-DOP-1159, R.1	December 19, 2013	Major Revision	Revise procedure to incorporate requirements of ABD-WFM-002 Rev 2.0 Technical Safety Requirements (TSRs) for Technical Area 54, Area G. No new hazards are introduced by this revision.
EP-AREAG-WO-DOP-1159, R.2	January 10, 2014	Major Revision	Revise procedure to add a note and modify Step 5.[21] to allow application of thread sealant tape to one of the TDOP pipe plugs; and modified step 5.[30] to mark that plug so that the plug can be easily removed for later sampling. Deleted note about adhesive curing time before step 6.[14][C]. No new hazards were introduced in this revision.
EP-AREAG-WO-DOP-1159, R.3	February 21, 2014	Major Revision	Revise procedure to correct TDOP labeling instructions. Make editorial corrections as necessary. No new hazards were introduced in this revision.

TABLE OF CONTENTS

Section Page

TITLE PAGE 1
REVISION HISTORY 2
TABLE OF CONTENTS 3

1. PURPOSE 4

2. SCOPE 4

3. PRECAUTIONS AND LIMITATIONS 4

4. PREREQUISITE ACTIONS 8
4.1 Planning and Coordination 8
4.2 Materials and Equipment 9
4.2.1 Measurement and Test Equipment (M&TE) 9
4.2.2 Special Tools and Equipment 9
4.2.3 Consumables 10
4.3 Field Preparation 11

5. INSTRUCTIONS—TEN-DRUM OVERPACK PREPARATION 12

6. INSTRUCTIONS—CORRUGATED METAL BOX LOADING 20

7. INSTRUCTIONS—TEN-DRUM OVERPACK CLOSURE 25

8. POST-PERFORMANCE ACTIVITIES 28
8.1 Disposition 28
8.2 Records Processing 29

9. REFERENCES 29

Appendices
Appendix 1, Ten-Drum Overpack 30

Attachments
Attachment 1, TA-54 Area G Ten-Drum Overpack (TDOP) Preparation Data Sheet 31
Attachment 2, TA-54 Area G Ten-Drum Overpack (TDOP) Closure Data Sheet 32

1. PURPOSE

This procedure provides instructions for the preparation of a Ten-Drum Overpack (TDOP) and for the loading of corrugated metal boxes (CMBs) into TDOP container at Technical Area 54 (TA-54).

2. SCOPE

This procedure applies to waste and support-services subcontractor personnel involved with TDOP operations within TA-54 Area G.

This procedure addresses the following activities associated with a TDOP:

- Preparation
- CMB loading
- Closing

This procedure provides instructions to load one CMB that has been modified in accordance with EP-AREAG-WO-DOP-1155, TA-54 Area G TRU Corrugated Metal Box SSSR Activities, into a new (un-used) TDOP. A CMB that has been modified in accordance with EP-AREAG-WO-DOP-1155 contains an intact internal secondary containment and is not a TRU open container. Thus the activities described in this procedure are not a new process/operation and are overpack operations similar to placing a waste drum into a standard waste box (SWB) or larger OVERPACK drum.

3. PRECAUTIONS AND LIMITATIONS

- To comply with the intent of the As Low As Reasonably Achievable (ALARA) program, all personnel **SHALL** apply the principles of time, distance, and shielding when working with or around radiological materials.

- At no time is any individual permitted to place any portion of their body under a suspended load or between a stationary and moving load.

- Avoid slips, trips, and falls by wearing the proper footwear with slip-resistant soles and using handrails when using stairs. Use established pathways when available and avoid walking on uneven or unstable surfaces.

3. PRECAUTIONS AND LIMITATIONS (continued)

- Activities, items, and containers **SHALL** satisfy approved design specification, regulatory requirements, process-specific parameters, and procedural requirements. Activities, items, or containers that do not conform to the approved specifications and requirements are considered nonconforming and Nonconformance Reports (NCRs) **SHALL** be generated in accordance with P330-6, Nonconformance Reporting, as required.

- During high temperature and humidity days, while using respirators and impermeable or multilayered work clothing which limits air movement, or during high-physical exertion individuals must be aware of potential heat stress. It must be noted that poor physical condition, some medicines, and inadequate tolerance for hot workplaces may result in elevated potential to heat stress. In order to reduce the potential for heat stress the following activities should be practiced:
  - Allow sufficient time for proper acclimatization to heat
  - Increase fluid and electrolyte intake before, during, and after work
  - Only drink in designated areas
  - Use an industrial hygiene and safety approved work/rest regimen
  - Recognize the early symptoms of heat stress
  - Consider heat stress when selecting personal protective equipment

- Job-related heat stress varies due to environmental conditions, type of work, metabolic rate, and clothing requirements. When heat stress monitoring is conducted, supervision and the industrial hygiene and safety team **SHALL** assess heat stress hazards and recommend control measures as warranted.

- When a worker observes an unsafe condition or act that may pose an imminent danger or other safety concern/hazard, the worker has the authority and responsibility to inform the worker engaged in the work and request that the work activity be paused and/or stopped based on the risk posed to the individual, the employees, the environment, or the facility in accordance with P101-18, Procedure for Pause/Stop Work.

- Not Applicable (N/A) is documented on the attachments during the performance of this procedure indicating information that is not required to be recorded.

- Do not disturb or touch and the TA-54 Operations Center **SHALL** be immediately notified wild animals, dead animals, nesting areas, droppings, or surfaces with mold growth to avoid exposure to biological threats (e.g., snakes, rodents, rodent droppings, Hanta virus, Bubonic plague, spiders, West Nile virus, molds).

3. PRECAUTIONS AND LIMITATIONS (continued)

- The most current list of Waste Isolation Pilot Plant (WIPP)-approved filtered vents are listed in DOE/WIPP 11-3384, CBFO Approved Filter Vents.

- This procedure contains special procedure step markings. **($)** is used to identify steps that implement TA-54 Area G Safety Basis requirements. Steps containing **($)** may <u>not</u> be changed without Engineering approval to ensure the safety envelope is maintained.

- **($)** Vehicle drivers, forklift operators, and crane operators **SHALL** be trained/certified and maintain applicable Los Alamos National Laboratory (LANL) qualifications for handling/securing/transporting TRU WASTE containers. Forklift operator training includes limiting container lift heights to the minimum required to perform the lift safely. (AC 5.9)

- **($)** A spotter **SHALL** be present for TRU waste container lifts planned to exceed 4 ft above the ground surface. If the planned lift will exceed 12 ft from the bottom of the container to the ground, a critical lift plan **SHALL** be used. [Specific Administrative Control (SAC) 5.7.8(1) and 5.7.8(2)]

- **($)** The performance criteria of METAL TRU WASTE CONTAINERS at the TA-54 Area G site **SHALL** meet the requirements of ABD-WFM-002, Technical Safety Requirements (TSRs) for Technical Area 54, Area G. [AC 5.6.11(2) and DF 6.2.1]

- The TDOP is designed for a gross weight of 6,700 lb with a maximum content net weight of approximately 5,000 lb.

- Subcontractors executing this procedure **SHALL** comply with the safety and health requirements documented in contractual agreements with the LANL.

3. PRECAUTIONS AND LIMITATIONS (continued)

- The Class 2 laser scanning head on the WCATS mobile device can cause eye injury if eye is exposed to the beam. Do not allow eyes of user or observers to become exposed to laser beam.

- The WCATS mobile device contains lithium-ion battery. The operating temperature recommendation for the Workabout Pro 3 (WCATS mobile device) is from -4 degrees F to 122 degrees F. Do not store the WCATS mobile device where temperatures are less than -40 °F or greater than 140 °F. Exposure to extreme temperatures (greater than 140 °F) may cause battery to explode. Keep mobile device out of direct sunlight for extended periods of time when not in use. Do not incinerate, mutilate, short circuit, or disassemble the battery pack. Do not dispose of in municipal waste receptacles. Dispose of in properly marked universal waste disposal areas.

- If the entire WCATS should become inoperable, before performing MAR related activity the operator notifies their immediate supervisor and contacts the Operations Center for guidance and direction.

- WCATS mobile device applications may be performed on the WCATS desktop application.

4. PREREQUISITE ACTIONS

NOTE *The listed prerequisite actions may be completed in any order.*

4.1 Planning and Coordination

Supervisor or designee

[1] **ENSURE** that the current revision of this document is available, and **IDENTIFY** this document as Working Copy or Information Only on the Title Page.

[2] **ENSURE** that the performance of this activity is scheduled on the TA-54 Area G facility schedule.

[3] **ENSURE** that, as a minimum, the following personnel are available for performance of this procedure, as required:

- Two Radiological Control Technicians (RCTs)
- One Waste Handling Technicians
- One Supervisor
- Two Riggers
- One spotter, as required

[4] **ENSURE** that a Radiological Work Permit (RWP) for the planned activity has been issued, as applicable.

[5] **ENSURE** that a pre-evolution briefing is conducted and documented for all personnel involved in the performance of this procedure, in accordance with EP-DIV-AP-0112, EWMO Pre-Job Briefings, or other approved process.

NOTE *The following step may be performed out-of-sequence as long as the step is performed to allow for the labeling of a closed TDOP.*

[6] **NOTIFY** the Waste Management – Services (WM-SVS) group to initiate a TRU Waste Storage Record (TWSR) and generate labels for the TDOP, <u>or</u> **GENERATE** a TWSR and labels using the Waste Compliance and Tracking System (WCATS) desktop application.

4.1 Planning and Coordination (continued)

[7] **VERIFY** the following with the TA-54 Operations Center:
- DEFINED AREAS involved in the work activities are in OPERATION MODE.
- Area G is in Staffing Condition 1 (one), as defined in EP-DIV-AP-20059, Watchbill Administration.

4.2 Materials and Equipment

NOTE *The list of materials and equipment is not an all inclusive list and approved additional tools and equipment may be used as necessary.*

4.2.1 Measurement and Test Equipment (M&TE)

NOTE *Torque wrenches are calibrated either as a percentage of full scale or a percentage of indicated value. The torque wrench accuracy information is found on the Calibration Certificate document. Torque wrenches are not calibrated in, nor are they to be used below 20% of their full range.*

Supervisor or designee

[1] **ENSURE** that the following calibrated measuring and test equipment is available, as required:
- Torque wrench capable of torquing 96 to 144 in-lb (8 to 12 ft-lb)
- Torque wrench capable of torquing 50 to 55 ft-lb

[2] **IF** a torque wrench has exceeded the calibration due date,
THEN:

[A] **TAG** the M&TE out-of-service.

[B] **OBTAIN** another torque wrench that is within the calibration due date.

4.2.2 Special Tools and Equipment

Supervisor or designee

[1] **ENSURE** that the following special tools and equipment are available, as required:
- 5/16 in. long-arm hex key
- 5/16 in. hex bit socket
- 9/16 in. long-arm hex key
- 9/16 in. hex bit socket

4.2.2 Special Tools and Equipment (continued)

- 1-1/2 in. 6 or 12 point socket for filter installation
- Ratchet drive wrench
- Lineup bar (bull or drift pin) with 3/8 in. rounded point
- Flashlight
- New Department of Transportation (DOT) 7A certified TDOPs
- Scraper (e.g., flexible spatula or putty knife)
- 3/4 in. – 14 NPSM or 3/4 in. – 14 American National Standard Taper Pipe Thread (NPT) thread tap
- 1/2-in. 13 UNC thread tap
- WCATS mobile device

4.2.3 Consumables

NOTE *The most current list of WIPP-approved filtered vents is contained in DOE/WIPP 11-3384, CBFO Approved Filter Vents.*

Supervisor or designee

[1] **ENSURE** that the following consumables are available, as required:

- Personnel Protective Equipment (PPE)
- Cut-resistant gloves (e.g., leather gloves or HexArmor®)
- Nitrile gloves or equivalent
- Cutting tool (e.g., utility knife)
- Decontamination supplies
- Thread-locker (e.g., Loctite® 271 or Loctite® 680)
- Thread sealant (e.g., Loctite® 246)
- WIPP-approved filtered vent (e.g., NucFil 019 or NucFil 019DS)
- Radioactive labels
- All-in-One labels
- Shorty labels
- Permanent marker
- 1/2 in.-13UNC - 28 x 2.5 in. cap screws
- RTV silicone gasket maker (e.g., Loctite® 598)
- Kimwipe® or equivalent
- Denatured alcohol or general purpose adhesive remover containing a near-equal mixture of Naphtha and Xylene, or Fantastik®
- TDOP lid flange spacer
- 3/4 in. NPT TDOP plugs
- Lubricating oil (i.e., WD-40 or equivalent)

4.3 Field Preparation

Supervisor or designee

[1] **ENSURE** that the applicable inspection sheet is completed for the work location in accordance with EP-AREAG-FO-DOP-1087, TA-54 Work Release Inspection Sheet.

[2] **ENSURE** that the TDOP labels (e.g., Shorty barcode labels) have been obtained from the Waste Help Team (wastehelp@lanl.gov).

5. INSTRUCTIONS—TEN-DRUM OVERPACK PREPARATION

This section is a stand-alone section and may be performed independently of, or in conjunction with, other Instruction sections.

NOTE 1 *Radiological surveys may be performed as determined necessary [e.g., by an RP representative (e.g., RCT)] any time during the performance of this procedure.*

NOTE 2 *The preparation of a new TDOP does not require that the activity be performed inside of a contamination control enclosure.*

NOTE 3 *Appendix 1, Ten-Drum Overpack, provides an illustration of the individual items that make up a TDOP.*

NOTE 4 *The TRU DRUM PREPARATION task on the WCATS mobile device may be performed in conjunction with the performance of the physical build of a TDOP.*

Supervisor or designee

[1] **ENSURE** that the prerequisites are complete.

Waste Handling Operator

[2] **OBTAIN** a new (un-used) pre-assembled TDOP, and **RECORD** the TDOP serial number on Attachment 1, TA-54 Area G Ten-Drum Overpack (TDOP) Preparation Data Sheet.

[3] **DETERMINE** whether the serial numbers on the TDOP lid and TDOP body match, and **CHECK** (√) YES or NO on Attachment 1.

[4] **IF** the serial numbers on the TDOP lid and TDOP body do **NOT** match, **THEN:**

[A] **STOP** work.

[B] **NOTIFY** supervision of the condition of the TDOP.

[C] **NOTIFY** the Los Alamos National Laboratory – Transuranic Waste Program (LTP-OCP) Operations Manager or designee and the TA-54 Operations Center of the condition of the TDOP status.

5. INSTRUCTIONS—TEN-DRUM OVERPACK PREPARATION (continued)

NOTE 1 *A Quality Assurance (QA) representative may be contacted for assistance with the NCR process.*

NOTE 2 *The NCR may be initiated at an operationally convenient time.*

[D] **ENSURE** that an NCR is initiated in accordance with P330-6, as required.

[E] **DOCUMENT** the discrepancy in the Comments section of Attachment 1.

[F] **SEGREGATE** the TDOP.

[G] **PROCEED** as directed by supervision/LTP-OCP Operations Manager or designee/TA-54 Operations Center.

[H] **GO** to Step 5.[2].

[5] **VISUALLY INSPECT** the TDOP for any major damage (i.e., significant deformation, punctures, tears, or corrosion) which would render the container unusable and **CHECK** (√) SAT or UNSAT for the inspection on Attachment 1.

[6] **IF** the TDOP fails the visual inspection,
THEN:

[A] **IDENTIFY** (e.g., tag or mark) the TDOP indicating that it is defective.

[B] **ENSURE** that the TDOP is segregated in order to prevent the item from being used.

[C] **NOTIFY** supervision of the discrepancy.

NOTE 1 *A QA representative may be contacted for assistance with the NCR process.*

NOTE 2 *The NCR may be initiated at an operationally convenient time.*

[D] **ENSURE** that an NCR is initiated in accordance with P330-6, as required.

5. INSTRUCTIONS—TEN-DRUM OVERPACK PREPARATION (continued)

[E] **GO** to Step 5.[2].

[7] **ENSURE** that the riggers have removed the TDOP lid.

[8] **IF** a TDOP lid **CANNOT** be removed (e.g., stripped cap screw),
THEN:

[A] **IDENTIFY** (e.g., tag or mark) the TDOP indicating that it is defective.

[B] **SEGREGATE** the TDOP in order to prevent the item from being used.

[C] **NOTIFY** supervision of the discrepancy.

NOTE 1 *A QA representative may be contacted for assistance with the NCR process.*

NOTE 2 *The NCR may be initiated at an operationally convenient time.*

[D] **ENSURE** that an NCR is initiated in accordance with P330-6, as required.

[E] **GO** to Step 5.[2].

[9] **VISUALLY INSPECT** the TDOP lid for defects that would prevent the TDOP from being used.

[10] **IF** the TDOP lid fails the visual inspection,
THEN:

[A] **IDENTIFY** (e.g., tag or mark) the TDOP indicating that it is defective.

[B] **ENSURE** that the TDOP is segregated in order to prevent the item from being used.

[C] **NOTIFY** supervision of the discrepancy.

5. INSTRUCTIONS—TEN-DRUM OVERPACK PREPARATION (continued)

NOTE 1 *A QA representative may be contacted for assistance with the NCR process.*

NOTE 2 *The NCR may be initiated at an operationally convenient time.*

[D] **ENSURE** that an NCR is initiated in accordance with P330-6, as required.

[E] **GO** to Step 5.[2].

NOTE *A TDOP may have a combination of one to ten WIPP-approved filtered vents and pipe plugs installed. A minimum of two WIPP-approved filtered vents are required to be installed in a TDOP.*

[11] **OBTAIN** a minimum of two WIPP-approved filtered vents (e.g., NucFil-019DS) and 3/4 in. American National Standard Taper Pipe Thread (NPT) TDOP plugs.

NOTE *Lubricating oil (i.e., WD-40 or equivalent) may be used for cleaning of threads.*

[12] **CLEAN** the threads of the vent port, as necessary.

WARNING

Skin contact with Loctite® can cause an allergic reaction; wear nitrile, pylox, or trionic gloves when applying Loctite®.

[13] **APPLY** a thread-locker (e.g., Loctite® 271 or Loctite® 680) to the first three threads of the WIPP-approved filtered vents.

[14] **ENGAGE** the threads of the WIPP-approved filtered vents in the 3/4 in. threaded ports from the inside of the TDOP working clockwise around the TDOP body starting with the TDOP nameplate.

NOTE *The number of engaged threads can be determined by counting two full rotations of the WIPP-approved filtered vent.*

[15] **HAND SCREW** a minimum of two WIPP-approved filtered vents into the 3/4 in. threaded ports from the inside of the TDOP until a minimum of two WIPP-approved filtered vent threads are engaged in the plug holes.

5. INSTRUCTIONS—TEN-DRUM OVERPACK PREPARATION (continued)

[16] **IF** a WIPP-approved filtered vent **CANNOT** be installed with a minimum of two threads engaged in the 3/4 in. threaded port,
AND multiple filters and plug holes have been tried,
THEN STOP the work activity and notify supervision for the applicable actions.

[17] **IF** a WIPP-approved filtered vent **CANNOT** be installed with a minimum of two threads engaged in the 3/4 in. threaded port,
THEN:

[A] **REMOVE** the WIPP-approved filtered vent that could not be installed.

WARNING

Tapping threads can create sharp burrs and edges. Wear leather gloves and safety glasses with side shields when tapping threads.

[B] **TAP** the 3/4 in. threaded port using the appropriate size tap (i.e., 3/4 in. – 14 NPSM or 3/4 in. – 14 NPT thread tap).

[C] **REPEAT** Steps 5.[11] through 5.[16] using a different WIPP-approved filtered vent or plug hole.

[18] **RECORD** the WIPP-approved filtered vents torque wrench information on Attachment 1.

[19] **RECORD** the WIPP-approved filtered vents information on Attachment 1.

[20] **TORQUE** the WIPP-approved filtered vents to a nominal 120 in.-lb (96 to 144 in.-lb), and **RECORD** the actual torque values on Attachment 1.

5. INSTRUCTIONS—TEN-DRUM OVERPACK PREPARATION (continued)

WARNING

Skin contact with Loctite® can cause an allergic reaction; wear nitrile, pylox, or trionic gloves when applying Loctite®.

NOTE *One pipe plug is installed in the TDOP using a thread sealant tape or compound so that the plug can be easily removed at a later time for sampling.*

[21] **APPLY** a thread sealant tape/compound or a thread-locker (e.g., Loctite® 271 or Loctite® 680) to the threads of a pipe plug.

CAUTION

Installing a pipe plug into a threaded port with a filtered vent installed on from the inside of the TDOP results in the filtered vent being obstructed.

[22] **ENGAGE** the threads of the pipe plug in the 3/4 in. threaded port from the outside of the TDOP ensuring that the pipe plug is not installed in a port with a filtered vent installed from the inside of the TDOP.

NOTE *The number of engaged threads can be determined by counting two full rotations of the pipe plug.*

[23] **HAND SCREW** the pipe plug into the 3/4 in. threaded port from the outside of the TDOP until a minimum of two pipe plug threads are engaged in the plug hole.

[24] **IF** a pipe plug **CANNOT** be installed with a minimum of two threads engaged in the 3/4 in. threaded port,
AND multiple pipe plugs have been tried,
THEN STOP the work activity and notify supervision for the applicable actions.

5. INSTRUCTIONS—TEN-DRUM OVERPACK PREPARATION (continued)

[25] **IF** a pipe plug **CANNOT** be installed with a minimum of two threads engaged in the vent port,
THEN:

[A] **REMOVE** the pipe plug that could not be installed.

WARNING

Tapping threads can create sharp burrs and edges. Wear leather gloves and safety glasses with side shields when tapping threads.

[B] **TAP** the plug hole using the appropriate size tap (i.e., 3/4 in. – 14 NPSM or 3/4 in. – 14 NPT thread tap).

[C] **REPEAT** Steps 5.[21] through 5.[24] using a different pipe plug.

CAUTION

Installing a pipe plug into a threaded port with a filtered vent installed on from the inside of the TDOP results in the filtered vent being obstructed.

[26] **REPEAT** Steps 5.[21] through 5.[25] until a pipe plug has been installed from the outside of the TDOP into each of the remaining threaded ports that does not have a filtered vent installed from the inside of the TDOP.

[27] **TIGHTEN** the pipe plugs until the plugs are flush with the TDOP body flange, and **CHECK** (√) SAT or UNSAT on Attachment 1.

[28] **IF** the pipe plug **CANNOT** be installed flush with the TDOP body flange,
THEN STOP the activity and **NOTIFY** supervision for the applicable actions.

[29] **CHECK** (√) SAT or UNSAT on Attachment 1 to indicate that a pipe plug has been installed from the outside of the TDOP in each threaded port that does not have a filtered vent installed from the inside of the TDOP.

[30] **REMOVE** all excess pipe plug sealant from the exterior and interior of the packaging, and **MARK** the pipe plug that was installed with thread sealant tape or compound with a permanent marker.

5. INSTRUCTIONS—TEN-DRUM OVERPACK PREPARATION (continued)

[31] **IF** the prepared TDOP is **NOT** to be used until a later time,
THEN:

[A] **ENSURE** that the TDOP lid is temporarily placed on the TDOP body.

CAUTION

The torque applied to the TDOP cap screws when installed to temporarily hold the TDOP lid in place while up-righting the TDOP is not to exceed 50 ft-lb in order not to damage the TDOP gasket.

[B] **ENSURE** that a sufficient number (minimum of four) of the TDOP cap screws have been installed and tightened in order to secure the TDOP lid for movement.

NOTE 1 *The TRU DRUM PREPARATION task on the WCATS mobile device may be performed out of sequence.*

NOTE 2 *The following step may be performed at a later time when the prepared TDOP is to be loaded.*

[32] **IF** the prepared TDOP is to be labeled,
THEN:

[A] **ENSURE** that a TRU DRUM PREPARATION task has been completed for the TDOP using a WCATS mobile device or desktop application.

[B] **ATTACH** one ID barcode label (Shorty label) to the center of the TDOP lid.

[C] **ATTACH** three ID barcode labels (Shorty labels) approximately 6 in. from the bottom of the TDOP, one immediately adjacent to the TDOP seam and the other two approximately 120° apart.

[33] **ENSURE** that Attachment 1 is forwarded to the applicable supervisor.

6. INSTRUCTIONS—CORRUGATED METAL BOX LOADING

NOTE *Visual examination (VE) of waste container contents is to be performed by CCP personnel in accordance with CCP-TP-113, CCP Standard Contact-Handled Waste Visual Examination, and this procedure.*

This section is a stand-alone section and may be performed independently of, or in conjunction with other Instruction sections.

NOTE 1 *Radiological surveys may be performed as determined necessary [e.g., by an RP representative (e.g., RCT)] any time during the performance of this procedure.*

NOTE 2 *The overpack (e.g., 412-PACK) task on the WCATS desktop application may be performed in conjunction with the performance of the loading of a TDOP.*

Supervisor or designee

[1] **ENSURE** that the prerequisites are complete.

Waste Handling Operator

[2] **ENSURE** that the CMB to be loaded into a TDOP has been staged in an area designated for loading using the INTRA-FACILITY TRANSFER task on a WCATS mobile device or desktop application.

[3] **OBTAIN** a TDOP that has been prepared in accordance with Section 5, Ten-Drum Overpack Preparation, and **ENSURE** that a TRU DRUM PREPARATION task has been completed for the TDOP using a WCATS mobile device or desktop application.

[4] **ENSURE** that the riggers have removed the TDOP lid.

[5] **RECORD** the TDOP serial number and CMB unique identifier on Attachment 2, TA-54 Area G Ten-Drum Overpack (TDOP) Closure Data Sheet.

6. INSTRUCTIONS—CORRUGATED METAL BOX LOADING (continued)

[6] **REQUEST** that the riggers place the TDOP in a horizontal position and secure the TDOP from moving.

[7] **IF** during the loading of the CMB into the TDOP movement of the TDOP is observed, **THEN STOP** the TDOP loading activity and **REQUEST** the applicable actions from supervision.

WARNING

Loading the CMB at the slightest angle or pushing the CMB into the bottom of the TDOP can result in movement of the TDOP causing personnel injury.

[8] **ENSURE** that all personnel are clear of the TDOP.

WARNING

Severe personnel injury or death can occur from placing parts of the body between the CMB and the TDOP. At no time is an individual permitted to place any portion of their body between the CMB and the TDOP.

[9] **REQUEST** the riggers load the CMB completely into the TDOP while monitoring the TDOP for movement and **CHECK** (√) YES or NO on Attachment 2 to indicate that the only item placed into the TDOP was a CMB.

[10] **INSPECT** the TDOP lid sealing surfaces.

NOTE *The TDOP lid may be turned upside down to permit easier access to the TDOP lid sealing surface.*

[11] **IF** the TDOP lid sealing surfaces are damaged,
THEN STOP the work activity and **NOTIFY** supervision for the applicable actions.

[12] **TAP** and **CLEAN** counterbored holes, as necessary, by running a 1/2-in. 13 UNC thread tap through the counterbored holes.

[13] **INSPECT** the TDOP lid flange spacers for missing or loose spacers.

6. INSTRUCTIONS— CORRUGATED METAL BOX LOADING (continued)

[14] **IF** a TDOP lid flange spacer is missing or loose,
THEN:

[A] **ENSURE** that the affected TDOP lid flange spacers have been removed.

[B] **APPLY** a liberal amount of low-intensity cleaning solvent to the TDOP lid flange spacer counterbore (e.g., denatured alcohol, general purpose adhesive remover containing a near-equal mixture of Naphtha and Xylene, or Fantastik®) with a Kimwipe® or equivalent.

WARNING

Skin contact with Loctite® can cause an allergic reaction; wear nitrile, pylox, or trionic gloves when applying Loctite®.

[C] **APPLY** Loctite® 680 or equivalent to the spacer bonding material in the lid counterbore where spacers have become detached.

[D] **CLEAN** the TDOP lid flange spacer counterbore seating area by removing any residual bonding adhesive, using a flexible spatula, putty knife, or similar tool.

[E] **INSERT** the spacer non-chamfered end into the TDOP lid flange counterbore until the spacer is seated flat against the counterbore surface.

[F] **REMOVE** excess Loctite® 680 or equivalent from the TDOP lid flange surface.

[15] **OBTAIN** a new TDOP lid gasket.

[16] **INSPECT** the TDOP lid gasket for the following and **DOCUMENT** the results of the inspection on Attachment 2:

- Damage that would prevent the gasket from sealing
- TDOP lid gasket expiration date

6. INSTRUCTIONS— CORRUGATED METAL BOX LOADING (continued)

[17] **IF** the TDOP lid gasket has exceeded the expiration date indicated on the TDOP lid gasket packaging,
OR the TDOP lid gasket is damaged,
THEN GO to Step 6.[15].

WARNING

At no time is any individual permitted to place any portion of the body under a suspended load in order to prevent personnel injury.

[18] **WIPE** the gasket sealing surface of the TDOP body and lid flanges to remove loose debris.

WARNING

Due to irritant and skin absorption hazard, nitrile gloves SHALL be worn when applying handling or applying adhesive remover.

CAUTION

Do not use acetone or other strong solvent, as paint/coating removal can occur.

[19] **APPLY** a light coat of low-intensity cleaning solvent to the TDOP lid flange, such as denatured alcohol, a general purpose adhesive remover containing a near-equal mixture of Naphtha and Xylene, or Fantastik®, and **WIPE** the surface clean.

NOTE *Steps 6.[20] and 6.[21] may be performed repeatedly for each piece of gasket material.*

[20] **ENSURE** that the gasket holes match the TDOP lid spacers.

[21] **REMOVE** the protective tape from the pressure-sensitive adhesive back of the gasket.

[22] **PLACE** the gasket assembly (adhesive-side down) over the spacers on the TDOP lid flange maintaining a 1/8 in. annular gap between the gasket outer diameter and the inside surface of the TDOP lid flange.

6. INSTRUCTIONS— CORRUGATED METAL BOX LOADING (continued)

[23] **PERFORM** minor adjustments to the gasket, as necessary, by trimming excess material.

[24] **IF** a gasket's gap exceeds 1/4 in.,
THEN:

[A] **DISCARD** the old TDOP gasket.

[B] **GO** to Step 6.[15].

WARNING

Skin contact with Loctite® can cause an allergic reaction; wear nitrile, pylox, or trionic gloves when applying Loctite®.

[25] **FILL** gasket gaps (less than or equal to 1/4 in. wide) between gasket sections using an RTV silicone gasket maker, such as Loctite® 598.

CAUTION

The torque applied to the TDOP cap screws when installed to temporarily hold the TDOP lid in place while up-righting the TDOP is not to exceed 50 ft-lb in order not to damage the TDOP gasket.

[26] **REQUEST** that the riggers install the TDOP lid with a minimum of four TDOP cap screws.

[27] **REQUEST** that the riggers place the TDOP in a vertical position.

NOTE *The overpack (e.g., 412-PACK) task on the WCATS desktop application may be performed in conjunction with the performance of the loading or closing of a TDOP.*

[28] **ENSURE** that a new PROCESS task (SELECT File > Task > Process) to overpack (e.g., 412-PACK) has been completed for the TDOP using the WCATS desktop application.

[29] **CLOSE** the TDOP in accordance with Section 7, Ten-Drum Overpack Closure.

7. INSTRUCTIONS—TEN-DRUM OVERPACK CLOSURE

This section is a stand-alone section and may be performed independently of, or in conjunction with other Instruction sections of this procedure.

NOTE *Radiological surveys may be performed as determined necessary [e.g., by an RP representative (e.g., RCT)] any time during the performance of this procedure.*

Supervisor or designee

[1] **ENSURE** that the prerequisites are complete.

WARNING

Skin contact with Loctite® can cause an allergic reaction; wear nitrile, pylox, or trionic gloves when applying Loctite®.

Waste Handling Operator

[2] **APPLY** a thread sealant (e.g., Loctite® 246) to four TDOP cap screws.

[3] **INSTALL** and **HAND TIGHTEN** the four TDOP cap screws.

[4] **REMOVE** the TDOP cap screws that were previously installed to hold the TDOP lid in place while up-righting the TDOP.

[5] **APPLY** a thread sealant (e.g., Loctite® 246) to the remaining TDOP cap screws.

[6] **INSTALL** and **TIGHTEN** the remaining TDOP cap screws until the cap screw contacts the TDOP lid.

[7] **DOCUMENT** the torque wrench information on Attachment 2.

[8] **TIGHTEN** each TDOP cap screw approximately one and one-half turn <u>or</u> **TORQUE** each TDOP cap screw to 50 ft-lb (50 to 55 ft-lb), <u>whichever occurs first</u>, in a pattern that ensures an even compression of the TDOP lid gasket (e. g, alternating sequence, criss-cross, or star pattern), and **RECORD** initials, Z number, and date on Attachment 2.

[9] **TORQUE** all TDOP cap screws to 50 ft-lb (50 to 55 ft-lb) in a pattern that ensures an even compression of the TDOP lid gasket (e. g, alternating sequence, criss-cross, or star pattern), and **DOCUMENT** the torque value on Attachment 2.

7. INSTRUCTIONS—TEN-DRUM OVERPACK CLOSURE (continued)

NOTE *The following step may be performed out-of-sequence or concurrently with other actions.*

[10] **CLEAN** the entire TDOP with Fantastik® cleaner or equivalent, as necessary.

NOTE *The following steps may be performed out-of-sequence.*

[11] **WEIGH** and **RECORD** the TDOP Gross Weight (lb) on Attachment 2.

[12] **RECORD** the TDOP Gross Weight (lb) on the TDOP in approximately 1/2 in. lettering using a permanent marker, and **CHECK** (√) SAT or UNSAT on Attachment 2.

[13] **ENSURE** that a TWSR and labels have been generated for the TDOP by the WM-SVS group or by using WCATS.

[14] **ENSURE** that the TDOP is labeled with the following labels:

- Five (5) container ID barcode labels as follows:
  - Three (3) container ID barcode labels approximately 6 in. from the bottom of the TDOP, approximately 120° apart.
  - One (1) container ID barcode label in the approximate center of the TDOP lid.
  - One (1) container ID barcode label approximately below the TDOP name plate and body bumper.
- Two (2) yellow radioactive waste labels as follows:
  - One (1) yellow radioactive waste label on the approximate center of the TDOP lid.
  - One (1) yellow radioactive waste label between the bottom two body bumpers.
- One (1) blue, non-regulated waste marking **OR** one (1) yellow hazardous waste marking placed approximately below the TDOP name plate and upper body bumper.
- One (1) Non-Defense Program (Non-DP) funded activities marking placed below the TDOP name plate approximately 6 in. from the bottom of the TDOP, if the waste was generated as a result of Non-DP funded activities, as applicable.

[15] **REQUEST** an RCT perform a radiological survey of the TDOP, as required.

7. INSTRUCTIONS—TEN-DRUM OVERPACK CLOSURE (continued)

[16] **ENSURE** that Attachment 2 is forwarded to the applicable supervisor.

[17] **IF** containers/items or package were loaded into a TDOP,
AND a new TWSR was **NOT** generated,
THEN ENSURE that a TRU Waste Storage Record Change Form (Form 2177) is initiated.

NOTE *The following step may be performed out of sequence.*

[18] **ENSURE** that the RECEIVING CONTAINER information (e.g., container closure date, time, and other requested information) has been updated in the WCATS desktop application.

8. POST-PERFORMANCE ACTIVITIES

8.1 Disposition

Waste Handling Operator

[1] **PRINT** name, **SIGN** and **DATE** the applicable attachments.

Supervisor or designee

[2] **REVIEW** the applicable attachments for accuracy and completeness.

[3] **IF** any deficiencies were identified,
THEN INITIATE actions to correct the deficiency [e.g., Facility Service Request (FSR) System], and **DOCUMENT** the actions taken (e.g., FSR Issue Number) in the Comments section of the applicable attachments.

[4] **PRINT** name, **SIGN** and **DATE** the applicable attachments.

NOTE 1 *Support-Services Subcontractors are not required to perform a Post-Job Review.*

NOTE 2 *Completing a Post-Job Review may be accomplished using the applicable P300 form or online (the preferred method since the institution has access to feedback and lessons learned https://irm.lanl.gov/forms/Shared/2104.pdf [Click on the Submit IWD Part 4 Post-Job Review]).*

[5] **IF** this procedure is categorized as a moderate or high/complex activity and any of the following occur:

- An activity was completed for the first time
- A request was made by anyone involved with the performance of this procedure to perform a post-job review
- An abnormal event occurred
- A revision to an existing procedure was issued and it has been determined by the procedure owner or designee that a Post-Job Review is required

THEN PERFORM a Post-Job Review in accordance with P300.

[6] **IF** the Post-Job Review identified any necessary changes to this procedure,
THEN INITIATE a revision to this procedure.

8.2 Records Processing

Supervisor or designee

[1] Disposition records in accordance with the following:

Record Identification	Record Type Determination	Protection/Storage Method	Processing Instructions
Attachment 1, TA-54 Area G Ten-Drum Overpack (TDOP) Preparation Checklist Attachment 2, TA-54 Area G Ten-Drum Overpack (TDOP) Closure Data Sheet	QA Record	Supervision **SHALL** implement a reasonable level of protection to prevent loss and degradation. Records should be maintained in a one hour fire-rated metal file cabinet when not in use.	When the records are ready for final disposition, the record is transferred to Records Management in accordance with EP-DIR-AP-10003, Record Management Procedure For ADEP Employees.

9. REFERENCES

ABD-WFM-002, Technical Safety Requirements (TSRs) for Technical Area 54, Area G

CCP-TP-113, CCP Standard Contact-Handled Waste Visual Examination

DOE/WIPP 11-3384, CBFO Approved Filter Vents

EP-AREAG-FO-DOP-1087, TA-54 Work Release Inspection Sheet

EP-AREAG-WO-DOP-1155, TA-54 Area G TRU Corrugated Metal Box SSSR Activities

EP-DIV-AP-20059, Watchbill Administration

EP-DIV-AP-0112, EWMO Pre-Job Briefings

EP-DIR-AP-10003, Record Management Procedure For ADEP Employees

P330-6, Nonconformance Reporting

P101-18, Procedure for Pause/Stop Work

APPENDIX 1
Page 1 of 1

TEN-DRUM OVERPACK

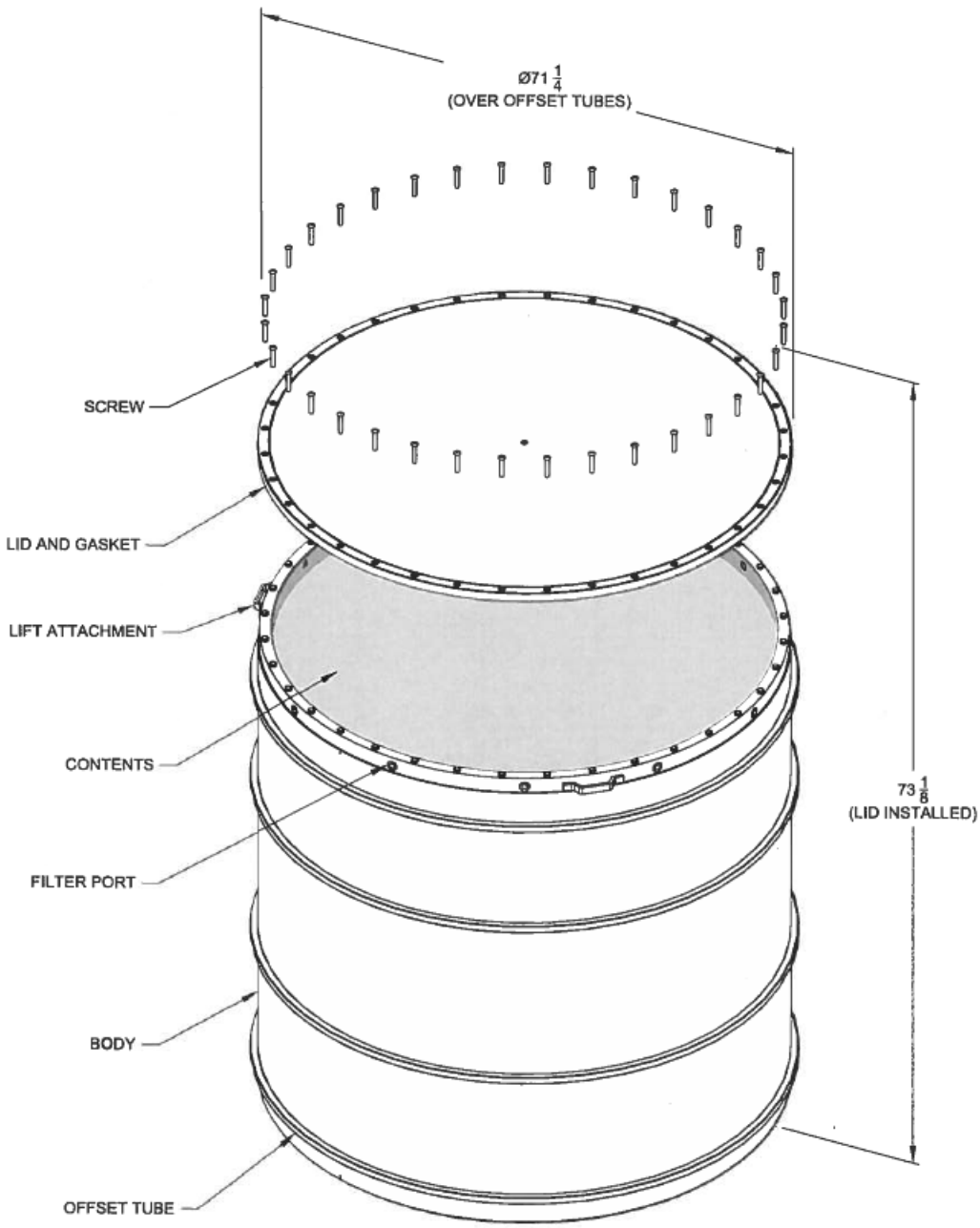

ATTACHMENT 1
Page 1 of 1

TA-54 AREA G TEN-DRUM OVERPACK (TDOP) PREPARATION DATA SHEET

5.[2] TDOP serial number: _____

5.[3] Serial number on the TDOP body matches TDOP lid: ☐ YES ☐ NO

5.[5] TDOP visual inspection (e.g., no significant deformation) satisfactory: ☐ SAT ☐ UNSAT

5.[18] Torque wrench information:
- M&TE No.: _____
- Cal. Expiration Date: _____
- Tolerance: _____

- Torque wrench listed above is within the acceptable ranges as displayed on the calibration certificate. ☐ YES ☐ NO

Performed By: _____ / _____ / _____ / _____
Operator (print) Signature Z # Date

NOTE *A minimum of two WIPP-approved filtered vents are required to be installed in a TDOP.*

Filter No. (clockwise from TDOP nameplate)	Manufacturer (5.[19])	Model No. (5.[19])	Serial No. (5.[19])	Manufacture Date (5.[19])	Torque Value [120 in-lb (96 to 144 in-lb)] (5.[20])
1					
2					
3					
4					
5					
6					

5.[27] Pipe plugs installed flush with TDOP body flange: ☐ SAT ☐ UNSAT

5.[29] Pipe plugs installed in all threaded ports without filtered vents: ☐ SAT ☐ UNSAT

Comments: _____

8.1[1] Performed By: _____ / _____ / _____ / _____
Operator (print) Signature Z # Date

8.1[4] Reviewed By: _____ / _____ / _____ / _____
Supervisor or designee (print) Signature Z # Date

ATTACHMENT 2
Page 1 of 1

TA-54 AREA G TEN-DRUM OVERPACK (TDOP) CLOSURE DATA SHEET

6.[5] TDOP serial number: _____
CMB unique identifier: _____

6.[9] Only item placed into the TDOP was a CMB: ☐ YES ☐ NO

6.[16] TDOP gasket inspection: Capable of sealing: ☐ YES ☐ NO
Expiration Date: _____

7.[7] TDOP torque wrench: M&TE No.: _____
Cal. Expiration Date: _____
Tolerance: _____
Torque wrench listed above is within the acceptable ranges as displayed on the calibration certificate. ☐ YES ☐ NO

Performed By: _____ / _____ / _____ / _____
Operator (print) Signature Z # Date

7.[8] TDOP cap screw torque value 50 ft-lb (50 to 55 ft-lb) or 1-1/2 turns, whichever occurs first: _____ / _____
Initials Z# & Date

7.[9] TDOP cap screw torque value 50 ft-lb (50 to 55 ft-lb): _____ ft-lb

7.[11] TDOP Gross Weight: _____ lb

7.[12] TDOP Gross Wt. recorded on TDOP lid in 1/2 in. lettering: ☐ SAT ☐ UNSAT

Comments: _____

8.1[1] Performed By: _____ / _____ / _____ / _____
Operator (print) Signature Z # Date

8.1[4] Reviewed By: _____ / _____ / _____ / _____
Supervisor or designee (print) Signature Z # Date

EP-AREAG-WO-DOP-1161, TA-54 Area G TRU Waste Glovebag Operations

LAUR-14-24889

TA-54 Area G TRU Waste Glovebag Operations

Effective Date: 09/30/13

Hazard Class: ☐ Low ☒ Moderate ☐ High/Complex

Usage Mode: ☒ Reference ☐ UET ☐ Both UET & Reference

The Responsible Manager has determined that the following organizations' review/concurrence is required for the initial document and major revisions. Review documentation is contained in the Document History File:

TRU Waste Project Support
Engineering
Quality Assurance
Radiation Protection
Industrial Hygiene and Safety
Subject-Matter Expert
Shift Operations Manager
Support-Services Subcontractor
Fire Protection Engineering

Responsible Manager, WDP-TWPS

Name (print)	Z#	Signature	Date
Paul Newberry	112056	/s/ Paul Newberry	09/18/13

Classification Review: ☐ N/A ☒ Unclassified ☐ UCNI ☐ Classified _____

Name (print)	Z#	Signature	Date
Teri Tingey	200975	/s/ Teri Tingey	09/06/13

Working Copy / Information Only (circle one)

Initials / Date: _____ / _____

This document fully satisfies the requirements of Integrated Work Management, in order to systematically describe the work activity, the associated hazards, and the controls that **MUST** be employed to mitigate the risks.

HISTORY OF REVISIONS

Document Number	Issue Date	Action	Description
EP-AREAG-WO-DOP-0217, R.0	Training Only	New Document	Develop instructions for the setup, operation, and maintenance of radiological glovebags in TA-54 Area G.
EP-AREAG-WO-DOP-0217, R.1	12/22/2009	Major Revision	Revise procedure to allow the glovebag HEPA filter to be installed during the initial setup of the glovebag or after the glovebag has been placed in the processing area. Modify instructions to allow the glovebag drum port collar to be left in the glovebag frame when being installed or removed. Make editorial corrections as necessary. Revise procedure to move the glovebag pressure test from the initial setup section to the processing area glovebag setup section. Remove the explanatory paragraph allowing some sub-section actions to be performed out of sequence. This revision does not introduce any new hazards in this procedure.
EP-AREAG-WO-DOP-0217, R.2	01/20/2010	Minor Revision	Revised step 15.1.[4] to ensure that a daughter drum O-ring bag has been placed inside the daughter drum. Made minor formatting changes. This revision does not introduce any new hazards in this procedure.
EP-AREAG-WO-DOP-0217, R.3	May 13, 2010	Minor Revision	Revise procedure to modify prerequisites in order to ensure that the appropriate round sheets are completed and add instructions for identifying defective glovebag components. Make editorial corrections, as necessary, such as correcting references. This revision does not introduce any new hazards in this procedure.
EP-AREAG-WO-DOP-0217, R.4	August 13, 2010	Major Revision	Revise procedure to incorporate new SSSR Process Area requirements that the total volume of flammable liquids or gases (except P10 gas) is less than or equal to 1 gal when an OPEN CONTAINER is present. Make editorial corrections, as necessary, such new ConOps format. This revision does <u>not</u> introduce any new hazards in this procedure.

HISTORY OF REVISIONS (continued)

Document Number	Issue Date	Action	Description
EP-AREAG-WO-DOP-0217, IPC-1	August 3, 2011	IPC-1	Revised to add Note and additional steps to Section 7 and Section 11 for glove installation and removal that accommodate for Glove bags pre-designed with glove rings already installed. No additional hazards were introduced to this procedure. IPC and rev bars in the left column denote the changes to the procedure.
EP-AREAG-WO-DOP-0217, R.5	September 6, 2011	Minor Revision	Revise procedure to modify the testing of a glovebag installation to allow for leakage at intentional openings of the glovebag such as zippers. Add instructions to remove the glovebag frame as necessary when disassembling the glovebag. Make editorial corrections as necessary. No additional hazards were introduced.
EP-AREAG-WO-DOP-0217, R.5, IPC-1	March, 22, 2012	IPC	Correct typographical error in Step 5.1[18], " … installed in accordance with Section 7 not 8.
EP-AREAG-WO-DOP-0217, R.5, IPC-2	September 6, 2012	IPC	Add new step 12.2[12] and modify subsequent steps in section 12.2 to update instructions for bag-in with bag change.
EP-AREAG-WO-DOP-1161, R.0	September 30, 2013	Major Revision	Revise procedure to incorporate requirements of ABD-WFM-002 Rev 2.0 Technical Safety Requirements (TSRs) for Technical Area 54, Area G. No new hazards are introduced by this revision. Document number changed; therefore, revision number reverted to zero.

TABLE OF CONTENTS

Section Page

TITLE PAGE 1
REVISION HISTORY 2
TABLE OF CONTENTS 4

1. PURPOSE 6

2. SCOPE 6

3. PRECAUTIONS AND LIMITATIONS 7

4. PREREQUISITES ACTIONS 11
4.1 Planning and Coordination 11
4.2.1 Special Tools and Equipment 12
4.2.2 Consumables 13
4.3 Field Preparation 13

5. PERFORMANCE—NEW GLOVEBAG SETUP 15
5.1 Initial Glovebag Setup 15
5.2 Processing Area Glovebag Setup 18

6. PERFORMANCE—GLOVEBAG HIGH EFFICIENCY PARTICULATE AIR (HEPA) FILTER INSTALLATION 24

7. PERFORMANCE—GLOVEBAG GLOVE INITIAL INSTALLATION 25

8. PERFORMANCE—GLOVEBAG DISPOSAL 29

9. PERFORMANCE—GLOVEBAG REPAIR 31

10. PERFORMANCE—DAILY GLOVEBAG INSPECTION 33

11. PERFORMANCE—GLOVEBAG GLOVE CHANGE 36

12. PERFORMANCE—BAG-IN/BAG-OUT BAG OPERATIONS 39
12.1 Bag-in Without Bag Change 39
12.2 Bag-in With Bag Change 41
12.3 Bag-out Without Bag Change 43

13. PERFORMANCE—PARENT DRUM BAG-ON/BAG-OFF OPERATIONS 46
13.1 Parent Drum Bag-On 46
13.2 Parent Drum Bag-Off 47

14. PERFORMANCE—DAUGHTER DRUM BAG-ON/BAG-OFF OPERATIONS 49
14.1 Daughter Drum Bag-On 49
14.2 Daughter Drum Bag-Off 50

15. PERFORMANCE—GLOVEBAG DRUM PORT COLLAR OPERATIONS 53
15.1 Glovebag Drum Port Collar Removal 53
15.2 Glovebag Drum Port Collar Installation 55

TABLE OF CONTENTS (continued)

Section Page

16. POST-PERFORMANCE ACTIVITY 58
16.1 Disposition 58
16.2 Records Processing 59

17. REFERENCES 59

Attachments
Attachment 1, WDP Daily Glovebag Inspection Tag 60

1. PURPOSE

This procedure provides instructions in order to establish standardized methods for installing, using, and maintaining glovebags in Technical Area (TA)-54 Area G.

This procedure provides detailed instructions for glovebag installation, use, and maintenance activities in accordance with RP-1-DP-65, Radiological Containments, and that satisfies the requirements of P101-28, Glovebox Safety Program.

2. SCOPE

This procedure applies to Transuranic (TRU) waste personnel who perform glovebag operations within Technical Area (TA)-54 Area G.

This procedure addresses the following activities:

- Glovebag Setup
- Glovebag Inspection/Testing
- Glovebag High Efficiency Particulate Air (HEPA) Filter Maintenance
- Glovebag Glove Initial Installation
- Glovebag Disposal
- Glovebag Repair
- Daily Glovebag Inspection
- Glovebag Glove Change/Replacement
- Bag-in/Bag-out Bag Operations
- Parent Drum Bag-in/Bag-out Bag Operations
- Daughter Drum Bag-in/Bag-out Bag Operations
- Glovebag Drum Port Collar Operations
- Glovebag negative Ventilation Loss

3. PRECAUTIONS AND LIMITATIONS

- To comply with the intent of the As Low As Reasonably Achievable (ALARA) Program, all personnel **SHALL** apply the principles of time, distance, and shielding when working with radiological materials.

- Activities, items, and containers **SHALL** satisfy approved design specifications, regulatory requirements, process-specific parameters, and procedural requirements. Activities, items, or containers that do not conform to the approved specifications and requirements are considered nonconforming and Nonconformance Reports (NCRs) **SHALL** be generated in accordance with P330-6, Nonconformance Reporting, as required.

- When a worker observes an unsafe condition or act that may pose an imminent danger or other safety concern/hazard, the worker has the authority and responsibility to inform the worker engaged in the work and request that the work activity be paused and/or stopped based on the risk posed to the individual, the employees, the environment, or the facility in accordance with P101-18, Procedure for Pause/Stop Work.

- Sharp or jagged edges may exist on material or equipment being handled by Waste Handling Operator. Waste Handling Operators **SHALL** use caution when handling material and equipment to reduce the risk of personal injury and contamination. Cut-resistant gloves **SHALL** be used as operations warrant.

- Supervision **SHALL** be notified if this procedure cannot be performed as written or if the equipment is damaged or operates improperly.

3. PRECAUTIONS AND LIMITATIONS (continued)

- Not Applicable (N/A) is documented on the attachments during the performance of this procedure indicating information that is not required to be recorded.

- High temperature and humidity; use of respirators and impermeable or multilayered work clothing, limited air movement; physical exertion; poor physical condition; some medicines; and inadequate tolerance for hot workplaces may result in heat stress. In order to reduce the potential of heat stress the following activities should be practiced:
  - Allow sufficient time for proper acclimatization to heat
  - Increase fluid and electrolyte intake before and during work
  - Use an industrial hygiene and safety approved work/rest regimen
  - Recognize the early symptoms of heat stress
  - Consider heat stress when selecting personal protective equipment

- Job-related heat stress varies due to environmental conditions, work metabolic rate, and clothing requirements. When heat stress monitoring is conducted, supervision and the industrial hygiene and safety team **SHALL** be notified of wet bulb globe thermometer (WBGT) readings that are greater than or equal to 71.5 °F. The Industrial Hygiene and Safety – Industrial Safety (IHS-IS) organization is responsible for facility-related issues and the support subcontractor is responsible for operational issues, these team **SHALL** assess heat stress hazards and recommend control measures as warranted.

- **BECOME** familiar with the potential upset conditions and **KNOW** the necessary responses.

NOTE *Cotton gloves may be worn for comfort but cannot be considered as a layer of protective clothing.*

- Personal protective equipment (PPE) **SHALL** be worn as required by the applicable RWP.

- The glovebag is susceptible to penetration from potential hazards such as sharp objects, heavy objects, and grinding or cutting activities.

- Sharp edges and points **SHALL** be covered in order to prevent puncturing the glovebag.

- All attachments to the glovebag **SHALL** be supported individually so as not to overstress the glovebag.

3. PRECAUTIONS AND LIMITATIONS (continued)

- Glovebags **SHALL** be decontaminated using water, mild detergent, or water-based strippable paint only.

NOTE *Flashlights or fluorescent lights should be used instead of incandescent lights.*

- Incandescent lights **SHALL** be kept away from the glovebag material in order to prevent melting the plastic from the heat of the lighting.

- Activities within glovebags **SHALL** be restricted to the identified area within the glovebag in order to minimize the spread of contamination within the glovebag and to reduce the possibility of breaching the glovebag.

- Glovebag gloves that have reached or exceeded the shelf life **SHALL** be formally tagged as out-of-service so as to prevent the inadvertent use of the expired glovebag glove, and **SHALL** be changed or inspected for a service life extension in accordance with P101-28.

- Glovebag glove changes **SHALL** be documented in accordance with EP-DIV-AP-0105, WDP Glovebox/Glovebag and Glove Safety Program.

- Glovebags that are or have been used to process items with radiological contamination and that have a HEPA filter which no longer permits a sufficient air flow **SHALL** be replaced rather than replacing the glovebag HEPA filter.

- Glovebag operations **SHALL** <u>not</u> be performed within a glovebag if the environmental temperature is less than 45 °F in order to prevent glovebag damage due to the plastic material becoming too brittle to withstand abrasion or impact without damage.

- The desired glovebag process operating temperature range is 60 to 100 °F based on ergonomic considerations and historical experience with WCRRF. This temperature range ensures the proper functioning of radiation protection materials (i.e., tape and glovebag).

- This procedure contains special procedure step markings. **($)** is used to identify steps that implement Area G Safety Basis requirements. Steps containing **($)** may <u>not</u> be changed without Engineering approval to ensure the safety envelope is maintained.

3. PRECAUTIONS AND LIMITATIONS (continued)

- **($)** Flammable liquids **SHALL** be authorized in accordance with EP-AREAG-FO-AP-1097, TA-54 Area G Combustible/Flammable Liquid Control, to remain compliant with Limiting Condition for Operations (LCO) 3.3.1.

- Flammable liquids are allowed to be used in the SSSR AREA for operation and maintenance activities but the volume of flammable liquids **SHALL** be limited to less than or equal a total of one gallon of flammable liquids.

- Vinyl cement is considered a flammable liquid and must not be stored within a TRU waste STORAGE AREA, PROCESS AREA, or SSSR AREA. The maximum amount of vinyl cement to be used at any one time for repairing a glovebag **SHALL** be limited to 8 ounces.

- Combustible materials **SHALL** be limited to minimum quantities necessary to support glovebag operations.

4. PREREQUISITES ACTIONS

NOTE *The listed prerequisite actions may be completed in any order.*

4.1 Planning and Coordination

Supervisor

[1] **ENSURE** that the procedure is the latest revision, and **IDENTIFY** this document as Working Copy or Information Only on Title Page.

[2] **ENSURE** that the performance of this procedure has been scheduled on the applicable facility's Plan of the Day.

[3] **ENSURE** that a Radiological Work Permit (RWP) is obtained in accordance with P121, Radiation Protection, as applicable.

[4] **ENSURE** that a pre-job briefing is conducted for all personnel involved in the performance of this procedure, in accordance with EP-DIV-AP-0112, WDP Pre-Job Briefing, and that the pre-job briefing included weather conditions, communication requirements, hazards/controls and emergency response actions.

[5] **ENSURE** that, as a minimum, the following personnel are available for performance of this procedure, as required:
- Two Radiological Control Technicians (RCTs)
- Two qualified waste handling operators
- One qualified supervisor [e.g., Person-In-Charge (PIC)]
- One Fire Watch

[6] **IF** a round sheet was generated for the activity,
THEN ENSURE that the applicable round sheet is completed for the work location (e.g., EP-AREAG-WO-DOP-1162, TA-54 Area G Dome 231 PermaCon Operator Round Sheet or EP-AREAG-WO-DOP-0220, TA-54 Area G Building 412 Containment Tent Operator round Sheet).

[7] **ENSURE** that the applicable EP-AREAG-FO-DOP-1087, Work Release Inspection Sheet, inspection sheet is completed.

[8] **VERIFY** with the AREA G operations center that:
- ALL Defined Area(s) involved in this work are in OPERATION MODE.
- Area G is in Staffing Condition 1 (one), as defined in EP-DIV-AP-20059, Watchbill Administration.

4.2 Materials and Equipment

4.2.1 Special Tools and Equipment

NOTE *The list of special tools and equipment is not an all-inclusive list and additional tools and equipment may be used as necessary.*

Operator or Supervision

[1] **ENSURE** that the following special tools and equipment are available, as required:

- Drum Hood Ventilation Unit (to be used as required by the RCT and RWP for opening drums)
- Cutting tool [e.g., polyvinyl chloride (PVC) cutter or knife]
- Personal protection equipment (PPE) as required by the RWP
- Cut resistance (e.g., leather or leather palm mechanic) gloves for drum handling
- Other tools and equipment necessary to accomplish this activity
- Sharps disposal container (e.g., 1-gal metal paint can)
- Glovebag and associated structural support
- Glovebag table of sufficient length and width to support the glovebag and a height to allow comfortable access
- Assorted allen wrenches
- Crescent wrench or equivalent
- Portable work platform available
- Rope for supporting glovebag HEPA filter
- Glovebag ventilation unit and associated equipment (e.g., ventilation ducting)

4.2.2 Consumables

NOTE *The list of consumables is not an all-inclusive list and additional tools and equipment may be used as necessary.*

Operator or Supervision

[1] **ENSURE** that the following consumables are available, as required:

- Bag-in/bag-out bags
- Drum port collar bags
- Decontamination supplies
- Chemwipes or equivalent
- Plastic waste bags
- Nitrile gloves
- Spill response kit
- Leak detection solution (e.g., Snoop®)
- Indelible ink marker
- Elastic bands for glove and bag ports
- Drum port collar retaining bands (e.g., adjustable clamps)
- Di (2-ethylhexyl) sebacate (DOS) tested HEPA filter
- Glovebag ventilation HEPA filter
- Radiation Protection (RP)-approved tape (e.g., Cargo Pit Tape, vinyl, or ChemTape®
- 8 oz. container of vinyl cement (e.g., HH-66 vinyl cement)
- Binding ties (e.g., cable ties)

4.3 Field Preparation

Operator or Supervision

[1] **IF** performing one of the following sections,

- Section 9, Glovebag Repair
- Section 10, Daily Glovebag Inspection
- Section 11, Glovebag Glove Change
- Section 12, Bag-In/Bag-Out Bag Operations
- Section 13, Parent Drum Bag-On/Bag-Off Operations
- Section 14, Daughter Drum Bag-On/Bag-Off Operations
- Section 15, Glovebag Drum Port Collar Operations

THEN ENSURE that the initial glovebag approval has been completed in accordance with RP-1-DP-65, Using Containment Tents for Radioactive Contamination Control, and that the approval is posted at the glovebag.

4.3 Field Preparation (continued)

[2] **IF** performing Section 5, New Glovebag Setup,
THEN OBTAIN a copy of the glovebag Certificate of Conformation in accordance with RP-1-DP-65, Using Containment Tents for Radioactive Contamination Control.

NOTE *The date of manufacture is stamped on the inside surface of each glove.*

[3] **IF** installing or changing a glovebag glove,
THEN VERIFY that three years has not elapsed since the glovebag glove was manufactured.

[4] **IF** performing one of the following sections,
- Section 11, Glovebag Glove Change
- Section 12, Bag-In/Bag-Out Bag Operations
- Section 13, Parent Drum Bag-On/Bag-Off Operations
- Section 14, Daughter Drum Bag-On/Bag-Off Operations
- Section 15, Glovebag Drum Port Collar Operations

THEN ENSURE that a WDP Daily Glovebag Inspection Tag (Attachment 1) has been successfully completed in accordance with Section 11, Daily Glovebag Inspection.

[5] **DETERMINE** whether the glovebag contamination monitor (e.g., Alpha Met or RP approved instrument) to be used has a current calibration sticker.

[6] **IF** the calibration for the glovebag contamination monitor to be accessed has expired,
THEN NOTIFY supervision or an RCT for the applicable actions.

[7] **ENSURE** that the glovebag contamination monitor to be accessed has been source checked for appropriate response.

[8] **VERIFY** that the air temperature at the glovebag location is greater than or equal to 50 °F.

[9] **IF** performing Section 5.1, Initial Glovebag Setup; or Section 9, Glovebag Repair,
AND a flammable liquid is to be brought into the glovebag,
THEN ENSURE that EP-AREAG-FO-AP-1097, TA-54 Area G Combustible/Flammable Liquid Control, is performed to track the volume of the flammable liquid.

5. PERFORMANCE—NEW GLOVEBAG SETUP

5.1 Initial Glovebag Setup

This section is a stand-alone section and may be performed independently of or in conjunction with other Performance sections.

This section provides instructions for the initial setup and inspection of a glovebag. This initial setup and inspection may be performed at a location other than the processing location.

Waste Handling Operator

[1] **ENSURE** that all applicable prerequisite actions have been completed.

NOTE *Steps 5.1[2] through 5.1[8] may be performed out of sequence or concurrently.*

[2] **PLACE** the glovebag table on a firm-level surface.

[3] **INSPECT** the glovebag table for the following, ensuring that the following criteria have been satisfied:
- All bolts and connectors are properly positioned and tight
- All items and materials have been removed from the table top
- Table top is free of any imperfections that could damage the glovebag (e.g., burs or sharp edges)

[4] **ENSURE** that a protective mat has been placed on the glovebag table top.

[5] **ASSEMBLE** the glovebag frame.

[6] **PLACE** the glovebag frame on the glovebag table top, and **ANCHOR** the glovebag frame to the glovebag table top.

[7] **PLACE** the glovebag inside of the glovebag frame, and **ARRANGE** the glovebag to permit attaching the glovebag to the glovebag frame.

[8] **SEAL** (e.g., RP-approved tape) the glovebag openings so that the glovebag can be inflated allowing attachment to the glovebag frame.

[9] **ATTACH** binding ties (e.g., cable ties) between the glovebag bottom-glovebag grommets and the glovebag frame.

5.1 Initial Glovebag Setup (continued)

[10] **ATTACH** a low-pressure high-volume air source to the glovebag and **INFLATE** the glovebag sufficiently (e.g., until the glovebag is approximately 2 ft high) in order to allow access to the glovebag attachment points.

[11] **LOOSELY ATTACH** binding ties (e.g., cable ties) between the glovebag inner most seam grommets and the glovebag frame.

[12] **ENSURE** that the glovebag HEPA filter port is aligned with the glovebag frame HEPA port, and **TIGHTEN** the binding ties.

[13] **LOOSELY ATTACH** binding ties (e.g., cable ties) between the frame and the outer most seam grommets.

CAUTION

Overstretching the glovebag with the binding ties (e.g., cable ties) could cause a separation of the glovebag seams resulting in a glovebag containment breach and the possible release of radiological contamination.

[14] **ENSURE** that the glovebag is properly aligned with the glovebag frame, and **TIGHTEN** the binding ties (e.g., cable ties).

WARNING

Lining the floor of the glovebag and the drum ports with matting reduces the possibility of a sharp or pointed object from penetrating the glovebag floor resulting in a release of radiological contamination.

[15] **PLACE** protective mats on the glovebag floor, ensuring that the entire glovebag floor is covered.

5.1 Initial Glovebag Setup (continued)

WARNING

Identifying a working area (Safety Zone) within the glovebag away from the glovebag walls (approximately 6 in.) reduces the possibility of a sharp or pointed object from penetrating the glovebag walls resulting in a release of radiological contamination.

NOTE *The tape may be applied to the protective mat before the protective mat is placed inside of the glovebag.*

[16] **ENSURE** that a Safety Zone has been established on the protective mat (e.g., apply tape to the protective mat around the bottom of the glovebag approximately 6 in. from the glovebag sides).

[17] **IF** a HEPA filter is to be installed,
THEN ENSURE that a HEPA filter has been installed on the glovebag in accordance with Section 6, Glovebag High Efficiency Particulate Air (HEPA) Filter Installation.

[18] **ENSURE** that glovebag gloves have been installed in accordance with Section 7, Glovebag Glove Initial Installation.

[19] **IF** the initial setup of the glovebag was performed at the desired process location (e.g., inside of the TA-54-231 PermaCon),
THEN GO to Section 5.2, Processing Area Glovebag Setup.

[20] **CUT/DETACH** the ties from the glovebag frame work.

[21] **COLLAPSE** the glovebag using the air mover, while **CUTTING** the glovebag supports, as necessary, to allow the glovebag to collapse.

[22] **FOLD** the glovebag.

5.2 Processing Area Glovebag Setup

This section is a stand-alone section and may be performed independently of or in conjunction with other Performance sections.

This section provides instructions for setting up a glovebag at the desired processing location following an initial setup and inspection at a different location.

Waste Handling Operator

[1] **ENSURE** that an initial setup and inspection has been performed in accordance with Section 5.1, Initial Glovebag Inspection.

[2] **MOVE** the glovebag and supporting equipment to the desired processing location.

NOTE *Steps 5.2[3] through 5.2[8] may be performed out of sequence or concurrently.*

[3] **ENSURE** that the glovebag table is placed on a firm-level surface.

[4] **INSPECT** the glovebag table for the following, ensuring that the following criteria have been satisfied:
- All bolts and connectors are properly positioned and tight
- All items and materials have been removed from the table top
- Table top is free of any imperfections that could damage the glovebag (e.g., burs or sharp edges)

[5] **ENSURE** that a protective mat has been placed on the glovebag table top.

[6] **ENSURE** that the glovebag frame has been assembled.

[7] **ENSURE** that the glovebag frame has been placed on top of the glovebag table top, and that the glovebag frame has been anchored to the glovebag table top.

[8] **PLACE** the glovebag inside of the glovebag frame, and **ARRANGE** the glovebag to permit attaching the glovebag to the glovebag frame.

[9] **ATTACH** binding ties (e.g., cable ties) between the glovebag bottom-glovebag grommets and the glovebag frame.

5.2 Processing Area Glovebag Setup (continued)

[10] **IF** the glovebag drum port collars are attached to the glovebag frame,
THEN ATTACH the glovebag to the glovebag drum port collars in accordance with Section 15, Glovebag Drum Port Collar Operations.

[11] **IF** a glovebag HEPA filter has **NOT** been installed,
THEN INSTALL the glovebag HEPA filter in accordance with Section 6, Glovebag High Efficiency Particulate Air (HEPA) filter Installation, and **COVER** the glovebag HEPA filter with a temporary cover in order to prevent air leakage.

[12] **TEMPORARILY SEAL** (e.g., tape) the glovebag openings so that the glovebag can be inflated allowing attachment to the glovebag frame.

[13] **ENSURE** that the glovebag HEPA filter bracing has been loosened and positioned to allow the glovebag HEPA filter installation.

[14] **THREAD** a rope from one side of the glovebag over the glovebag framing down through the glovebag HEPA filter bracing, through the glovebag HEPA filter handle, and over the glovebag framing to the opposite side of the glovebag.

NOTE 1 *Steps 5.2[15] and 5.2[16] are performed simultaneously.*

NOTE 2 *The raising of the glovebag HEPA filter in the following step requires two waste handling operators.*

[15] **SIMULTANEOUSLY PULL** the glovebag HEPA filter rope from both sides of the glovebag in order to raise the glovebag HEPA filter into the glovebag HEPA filter bracing.

[16] **ATTACH** a low-pressure high-volume air source to the glovebag and **INFLATE** the glovebag (e.g., until the glovebag is approximately 2 ft high) in order to allow access to the glovebag attachment points.

[17] **SECURE** the glovebag HEPA filter within the glovebag HEPA filter bracing.

[18] **LOOSELY ATTACH** binding ties (e.g., cable ties) between the glovebag inner most seam grommets and the glovebag frame.

5.2 Processing Area Glovebag Setup (continued)

[19] **LOOSELY ATTACH** binding ties (e.g., cable ties) between the frame and the outer most seam grommets.

CAUTION

Overstretching the glovebag with the binding ties (e.g., cable ties) could cause a separation of the glovebag seams resulting in a glovebag containment breach and the possible release of radiological contamination.

[20] **ENSURE** that the glovebag is properly aligned with the glovebag frame, and **TIGHTEN** the binding ties (e.g., cable ties).

[21] **ENSURE** that the temporary seals (e.g., tape and glovebag HEPA filter cover) used to seal the glovebag in order to allow the glovebag to be inflated have been removed.

[22] **PLACE** equipment and material necessary to perform the planned work activity inside of the glovebag, as necessary.

NOTE *The leak testing of the glovebag may be performed out of sequence such as before the assembly of the glovebag.*

[23] **ENSURE** that the glovebag openings are sealed (e.g., tape) in order to allow the glovebag to be leak tested.

NOTE 1 *Acceptable results on the vendor's pressure test do <u>not</u> eliminate the requirement for a pressure test to be performed.*

NOTE 2 *The pressure test rig consists of a magnehelic gauge and an air compressor, designed to inflate the glovebag and to automatically maintain the pressure in the specified range.*

Waste Handling Operator or Designee

[24] **CONNECT** an air mover to a glove sleeve or other available opening on the glovebag.

[25] **TURN** the air mover power switch to ON.

5.2 Processing Area Glovebag Setup (continued)

NOTE 1 *Re-inflation of the glovebag during leak testing to facilitate the location of all leaks is acceptable.*

NOTE 2 *The following step is to leak test the glovebag and not to pressure test the glovebag.*

[26] **WHEN** the glovebag has been inflated to the pressure specified in Table 5-1, Glovebag Test Pressures,
AND has been allowed to stabilize for at least 3 min.,
THEN INSPECT each seam of the glovebag for leaks by applying leak detection solution (e.g., Snoop®), and mark any leaks that are detected.

TABLE 5-1, GLOVEBAG TEST PRESSURES

Test	Low Pressure Setpoint [positive in. water gauge (WG)]	High Pressure Setpoint [positive in. (WG)]
Pre-Installation	2	2 – 1/2
Post-Installation	3/4	1 – 1/4

[27] **REMOVE** any remaining leak detection solution from the glovebag.

[28] **IF** no leaks at the glovebag seams are detected,
THEN GO to Step 5.2[34].

[29] **REPAIR** leaks using the following method:

[A] **APPLY** adhesive-backed RP-approved tape to the problem area, on both the inside and outside of the glovebag.

5.2 Processing Area Glovebag Setup (continued)

WARNING

1. **Vinyl cement is flammable and a respiratory system irritant material and is to be used in a well ventilated area.**

2. **Vinyl cement is considered a flammable liquid and must not be stored within a TRU waste storage or process area.**

3. **The maximum amount of vinyl cement to be used at any one time for repairing a glovebag SHALL be limited to 8 ounces.**

[B] **IF** a patch using vinyl cement (e.g., HH-66 Vinyl Cement) is to be used to repair the glovebag,
THEN:

[a] **ENSURE** that all combustible material has been removed from the glovebag.

[b] **ENSURE** that there is no MAR stored or staged within 10 ft outside of the glovebag.

[c] **ENSURE** that a FIREWATCH has been established in the area of the glovebag repair activity.

[d] **APPLY** a patch material that is compatible with the glovebag and extends at least two inches in all directions from the penetration using a vinyl cement (e.g., HH-66 Vinyl Cement).

[e] **($) REMOVE** the vinyl cement from the TRU waste STORAGE AREA, PROCESS AREA, or SSSR AREA in accordance with EP-AREAG-FO-AP-1097. (LCO 3.3.1)

[f] **IF** the FIREWATCH is no longer required,
THEN DEACTIVATE the FIREWATCH.

[g] **GO** to Step 5.2[30].

[30] **INFLATE** the glovebag to the applicable pressure specified in Table 5-1.

5.2 Processing Area Glovebag Setup (continued)

[31] **APPLY** leak detection solution to each seam and surface of the glovebag and **INSPECT** for leaks, and **MARK** any leaks that are detected with an indelible ink marker.

[32] **IF** leaks are detected,
THEN NOTIFY supervision and an RCT of the discrepancy and **REQUEST** the applicable actions.

[33] **WHEN** glovebag has held the specified test pressure for greater than or equal to 5 min., **THEN DISCONNECT** the air pressure test rig.

[34] **ENSURE** that a cylindrical HEPA filter has been installed in a glovebag opening using RP-approved tape, and **CONNECT** an air mover to the glovebag cylindrical HEPA filter.

[35] **ENSURE** that the glovebag drum port collars have been installed in accordance with Section 15, Glovebag Drum Port Collar Operations.

[36] **PERFORM** a daily inspection of the glovebag in accordance with Section 10, Daily Glovebag Inspection.

6. PERFORMANCE—GLOVEBAG HIGH EFFICIENCY PARTICULATE AIR (HEPA) FILTER INSTALLATION

NOTE *Multiple filters installed in parallel, larger filters, multiple filters installed in series, or alternate attachment methods may be required to satisfy special needs.*

This section is a stand-alone section and may be performed independently of or in conjunction with other Performance sections.

This section is used for the initial installation of a HEPA filter before the glovebag is placed into service and before the glovebag has been contaminated with radiological material.

Waste Handling Operator

[1] **ENSURE** that all applicable prerequisite actions have been completed.

Radiation Protection

[2] **ENSURE** that the Waste Handling Operator is aware of any special installation requirements.

NOTE *HEPA filters are Di (2-ethylhexyl) sebacate (DOS) tested to be 99.97% efficient to 0.3 micron particles.*

Waste Handling Operator

[3] **ENSURE** that any sharp edges of the HEPA filter that could breach the HEPA filter sleeve have been covered (e.g., taped) to prevent a HEPA filter sleeve breach.

WARNING

Placing a HEPA filter into the HEPA filter sleeve from the top of the glovebag requires the Waste Handling Operator to work above the glovebag which presents potential fall hazards to individuals and the potential of breaching the glovebag by falling objects.

[4] **INSTALL** the Di (2-ethylhexyl) sebacate (DOS) tested HEPA filter into the opening of the HEPA filter sleeve (sleeve on top of the glovebag) with the sleeve extended outward from the glovebag.

[5] **SECURE** the HEPA filter to the glovebag using RP-approved tape.

7. PERFORMANCE—GLOVEBAG GLOVE INITIAL INSTALLATION

This section is a stand-alone section and may be performed independently of or in conjunction with other Performance sections.

This section is used for the initial installation of a glovebag rubber glove before the glovebag is placed into service and before the glovebag has been contaminated with radiological material.

Operator

[1] **ENSURE** that all applicable prerequisite actions have been completed.

[2] **OBTAIN** the appropriate glove from the standard storage location.

[3] **DETERMINE** whether the manufacturer's date for the glovebag glove has exceeded the established shelf life.

[4] **INSPECT** the internal and external surfaces of each glove and bag-in/bag-out bag for the following:

- Layer separations
- Cuts
- Natural degradation
- Cracks
- Stiffness
- Punctures
- Splits
- Obvious physical signs of deterioration
- Discoloration
- Surface deposits/debris

[5] **IF** the manufacturer's date indicates that the glove has exceeded the established shelf life, **THEN:**

[A] **DISCARD** the glovebag glove to prevent the use of the glovebag glove.

[B] **OBTAIN** a new glovebag glove.

[C] **GO** to Step 7.[3].

7. PERFORMANCE—GLOVEBAG GLOVE INITIAL INSTALLATION (continued)

[6] **IF** an abnormal internal/external surface is detected,
THEN:

[A] **DOCUMENT** the glovebag glove discrepancy on Attachment 1, WDP Failed Glovebox/Glovebag Glove Data Sheet, of EP-DIV-AP-0105, WDP Glovebox/Glovebag and Glove Safety Program.

[B] **PLACE** the glovebag glove in an approved location for an engineering evaluation, if possible.

[C] **OBTAIN** a new glovebag glove.

[D] **GO** to Step 7.[3].

NOTE 1 *To make sealing the containment to the component easier, gloves or access sleeves may be left uninstalled to provide an additional hand hole to work through.*

NOTE 2 *Some sleeves are reserved for later installation of power leads and transfer sleeves, as required.*

[7] **PLACE** the new gloves near the corresponding glovebag sleeves.

[8] **ENSURE** that the gloves are properly oriented for the task.

[9] **ENSURE** that the membranes of the reserved sleeves remain intact.

7. PERFORMANCE—GLOVEBAG GLOVE INITIAL INSTALLATION (continued)

NOTE *Refer to Figure 7-1, Glovebag Glove Installation, for the installation of a glovebag glove identified in the following steps.*

[10] **IF** the glovebag is equipped with pre-installed glove ring
THEN GO to step 7.[13] of this section.

[11] **INSERT** the end of the sleeve through the glove ring, and **FOLD** the end of the sleeve out to cover the glove ring and approximately 1/4 to 1/2 in. past the edge of the glove ring.

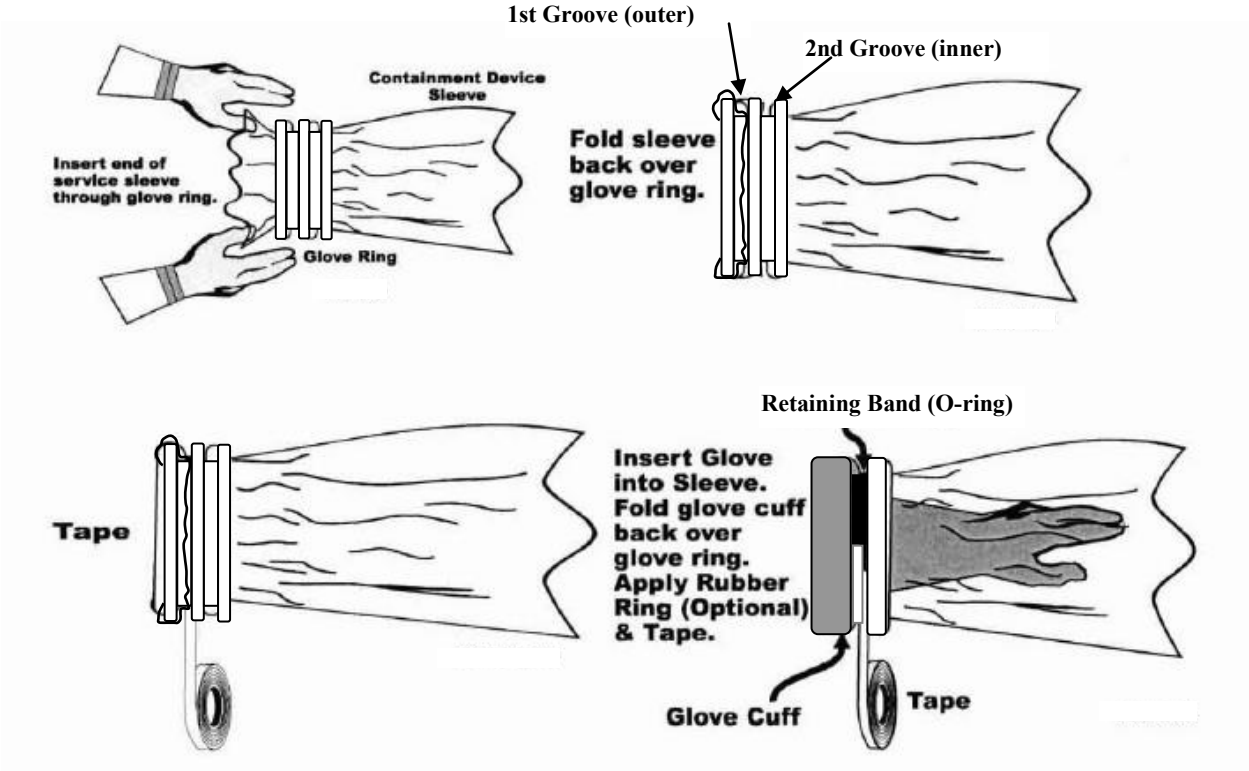

FIGURE 7.1, GLOVEBAG GLOVE INSTALLATION

7. PERFORMANCE—GLOVEBAG GLOVE INITIAL INSTALLATION (continued)

[12] **TAPE** over the edge of the glovebag glove sleeve.

NOTE *The Glovebag assembly may come pre-designed with glove rings already installed on the glove sleeve.*

[13] **IF** glove ring is pre-installed,
THEN INSERT a glovebag glove into the sleeve in the appropriate working position, and **FOLD** the cuff of the glovebag glove over the ridge ring.

[14] **IF** glove ring is not pre-installed,
THEN INSERT a glovebag glove into the sleeve in the appropriate working position, and **FOLD** the cuff of the glovebag glove over to the 2nd groove.

[15] **PLACE** the fastening device (e.g., O-ring or steel band) over the glove and sleeve, and into the 1st groove in the glove ring as applicable.

[16] **IF** steel ring was used,
THEN tighten steel ring fastening device to secure glove to glovebag ring assembly.

[17] **APPLY** RP-approved tape over the elastic band or steel band, leaving a tab.

[18] **PUSH** the glovebag glove and sleeve inside of the containment.

[19] **RECORD** the glovebag glove installation date and the glove change due date of three years from the manufacture date on the new glovebag glove at the top outer lip of the glove, using a permanent marker.

[20] **DOCUMENT** the glove installation in accordance with EP-DIV-AP-0105, WDP Glovebox/Glovebag and Glove Safety Program.

8. PERFORMANCE—GLOVEBAG DISPOSAL

This section is a stand-alone section and may be performed independently of or in conjunction with other Performance sections.

Waste Handling Operator

[1] **ENSURE** that all applicable prerequisite actions have been completed.

[2] **ENSURE** that the daughter drum and parent drum have been removed from the glovebag in accordance with the applicable section of this procedure.

[3] **MIST** the inside of the glovebag drum port collars with spray cleaner.

[4] **ENSURE** that an approved air mover is connected to a convenient glovebag sleeve and that the air mover is ON.

[5] **BAG-OUT** all items that are not required for containment removal from the glovebag through the bag-out sleeve in accordance with Section 12, Bag-in/Bag-out Operations.

WARNING

Use caution in removing the containment to prevent the release of any contamination.

[6] **WIPE DOWN** the glovebag interior to the greatest extent reasonably achievable, as required.

[7] **ENSURE** that the glovebag drum port collars have been removed from the glovebag in accordance with Section 15, Glovebag Drum Port Collar Operations.

[8] **THREAD** a rope from one side of the glovebag over the glovebag framing down through the glovebag HEPA filter bracing, through the glovebag HEPA filter handle, and over the glovebag framing to the opposite side of the glovebag.

[9] **CUT/DETACH** the ties from the glovebag frame work.

8. PERFORMANCE—GLOVEBAG DISPOSAL (continued)

[10] **SUPPORT** the weight of the glovebag HEPA filter with the rope threaded through the glovebag HEPA filter handle, and loosen and position the glovebag HEPA filter bracing to allow the glovebag HEPA filter removal.

NOTE *Steps 8.[11] and 8.[12] are performed simultaneously.*

[11] **COLLAPSE** the glovebag using the air mover, while **CUTTING** the glovebag supports to allow the glovebag to collapse.

NOTE *The lowering of the glovebag HEPA filter in the following step requires two waste handling operators.*

[12] **GRADUALLY RELEASE** the glovebag HEPA filter rope in order to lower the glovebag HEPA filter.

[13] **WHEN** the glovebag and glovebag HEPA filter have been lowered to the glovebag table,
THEN:

[A] **REMOVE** the rope from the glovebag HEPA filter and **COVER** the HEPA filter opening with RP-approved tape, as necessary.

[B] **FOLD** the glovebag on top of itself in the direction of the air mover.

[14] **WRAP** the glovebag with RP-approved tape and **SEPARATE** the air mover from the glovebag.

[15] **PLACE** the glovebag into a secondary bag (e.g., super sack or bagout bag).

[16] **IF** the frame is to be removed,
THEN:

[A] **SEPARATE** the frame from the work surface (e.g., cut/detach tie wraps).

[B] **REMOVE** the frame from the work surface.

[17] **PLACE** the bagged glovebag in a certified-vented container.

9. PERFORMANCE—GLOVEBAG REPAIR

This section is a stand-alone section and may be performed independently of or in conjunction with other Performance sections.

Waste Handling Operator

[1] **ENSURE** that all applicable prerequisite actions have been completed.

[2] **ENSURE** that repair materials have been bagged into the glovebag in accordance with the applicable section of this procedure.

RCT

[3] **PERFORM** radiological contamination surveys as necessary during the glovebag repair.

Waste Handling Operator

[4] **IF** radiological contamination is detected at any time during the glovebag repair, **THEN FOLLOW** the instructions of the RCT.

[5] **APPLY** RP-approved tape to the problem area, on both the inside and outside of the glovebag.

WARNING

1. **Vinyl cement is flammable and a respiratory system irritant material and is to be used in a well ventilated area.**
2. **Vinyl cement is considered a flammable liquid and must not be stored within a TRU waste storage or process area.**
3. **The maximum amount of vinyl cement to be used at any one time for repairing a glovebag SHALL be limited to 8 ounces.**

[6] **IF** a patch using vinyl cement (e.g., HH-66 Vinyl Cement) is to be used to repair the glovebag,
THEN:

[A] **ENSURE** that all combustible material has been removed from the glovebag.

9. PERFORMANCE—GLOVEBAG REPAIR (continued)

[B] **ENSURE** that there is no MAR stored or staged within 10 ft outside of the glovebag.

[C] **ENSURE** that a FIREWATCH has been established in the area of the glovebag repair activity.

[D] **APPLY** a patch material that is compatible with the glovebag and extends at least two inches in all directions from the penetration using a vinyl cement (e.g., HH-66 Vinyl Cement).

[E] **($) REMOVE** the vinyl cement from the TRU waste STORAGE AREA, PROCESS AREA, or SSSR AREA in accordance with EP-AREAG-FO-AP-1097. (LCO 3.3.1)

[G] **EXIT** this section.

10. PERFORMANCE—DAILY GLOVEBAG INSPECTION

This section is a stand-alone section and may be performed independently of or in conjunction with other Performance sections.

An inspection of the glovebag and working glovebag gloves is required before any operations are performed in the glovebag.

NOTE 1 *Glovebag inspections may be performed on a frequency as directed by supervision (e.g., weekly) for glovebags that have been contaminated with radiological material and are not currently being used to process radiological material.*

NOTE 2 *An example of a WDP Glovebag Inspection Tag is included on Attachment 1, WDP Daily Glovebag Inspection Tag Example.*

Waste Handling Operator

[1] **ENSURE** that all applicable prerequisite actions have been completed.

[2] **IF** at any time an abnormal condition or contamination is found,
THEN:

[A] **STOP** operations.

[B] **NOTIFY** supervision and the RCT for the applicable actions.

[3] **VERIFY** that the initial glovebag approval has been completed in accordance with RP-1-DP-65, Using Containment Tents for Radioactive Contamination Control, and that the Certificate of Conformation is posted at the glovebag.

[4] **IF** a WDP Daily Glovebag Inspection Tag (Attachment 1) has **NOT** been generated for the glovebag,
OR the current WDP Daily Glovebag Inspection Tag (Attachment 1) has no available space for documenting inspections,
THEN:

[A] **RECORD** the glovebag number and location on a WDP Daily Glovebag Inspection Tag (Attachment 1).

[B] **CHECK** (√) DAILY on the WDP Daily Glovebag Inspection Tag (Attachment 1).

10. PERFORMANCE—GLOVEBAG INSPECTION (continued)

RCT

[C] **SIGN** on the WDP Daily Glovebag Inspection Tag (Attachment 1).

Waste Handling Operator

[D] **ATTACH** the WDP Daily Glovebag Inspection Tag (Attachment 1) to the glovebag or in a visible location next to the glovebag.

RCT

[5] **SURVEY** the glovebag for radiological contamination.

Waste Handling Operator

[6] **VISUALLY INSPECT** the glovebag for the following conditions:

- No visible damage to the glovebag (e.g., holes, tears, or separated seams)
- Containment is properly tied off to the support framing
- Visibility is maintained
- No standing solutions inside of the glovebag
- Sharp tools or items are not exposed such that they could penetrate the glovebag or gloves
- No excess equipment is present inside of the glovebag
- No equipment is located outside of the identified Safety Zone within the glovebag
- The air mover hose and assembly is free of defects or deficiencies
- Gloves and bag-in/bag-out bags securely attached to the glovebag
- Gloves and bags are marked with the installation date and change due date
- Gloves are not past the change due date
- Glovebag HEPA filter installed and unobstructed
- External lighting is enough to illuminate the operation within the glovebag
- Glovebag air mover is ON (e.g., switch illuminated)
- Activities outside of the glovebag do not jeopardize the integrity of the glovebag

10. PERFORMANCE—GLOVEBAG INSPECTION (continued)

[7] **INSPECT** the internal and external surfaces of each glove and bag-in/bag-out bag for the following:

- Layer separations
- Cuts
- Natural degradation
- Cracks
- Stiffness
- Punctures
- Splits
- Obvious physical signs of deterioration
- Discoloration
- Surface deposits/debris

NOTE *Failed gloves should be retained for an engineering evaluation, if possible.*

Waste Handling Operator

[8] **IF** radiological contamination is detected or an abnormal internal/external surface is detected,
THEN:

[A] **STOP** operations.

[B] **NOTIFY** supervision and the RCT for the applicable actions.

[9] **SIGN**, **DATE**, and **RECORD** Z# on the WDP Daily Glovebag Inspection Tag (Attachment 1) to indicate the satisfactorily completion of the glovebag inspection.

11. PERFORMANCE—GLOVEBAG GLOVE CHANGE

This section is a stand-alone section and may be performed independently of or in conjunction with other Performance sections.

Waste Handling Operator

[1] **ENSURE** that all applicable prerequisite actions have been completed.

RCT

[2] **PERFORM** radiological contamination surveys as necessary during the glove change.

Waste Handling Operator

[3] **IF** radiological contamination is detected at any time during the glove change, **THEN FOLLOW** the instructions of the RCT.

[4] **POSITION** a downdraft unit as directed by an RCT.

[5] **GRASP** the damaged glove with the other hand from inside of the glovebag, and **SLOWLY PULL** the hand out of the damaged glove.

[6] **REMOVE** the layer of tape and elastic band or steel band from the glovebag glove.

11. PERFORMANCE—GLOVEBAG GLOVE CHANGE (continued)

NOTE *Refer to Figure 11-1, Glovebag Glove Ring, for the installation of a rubber glove.*

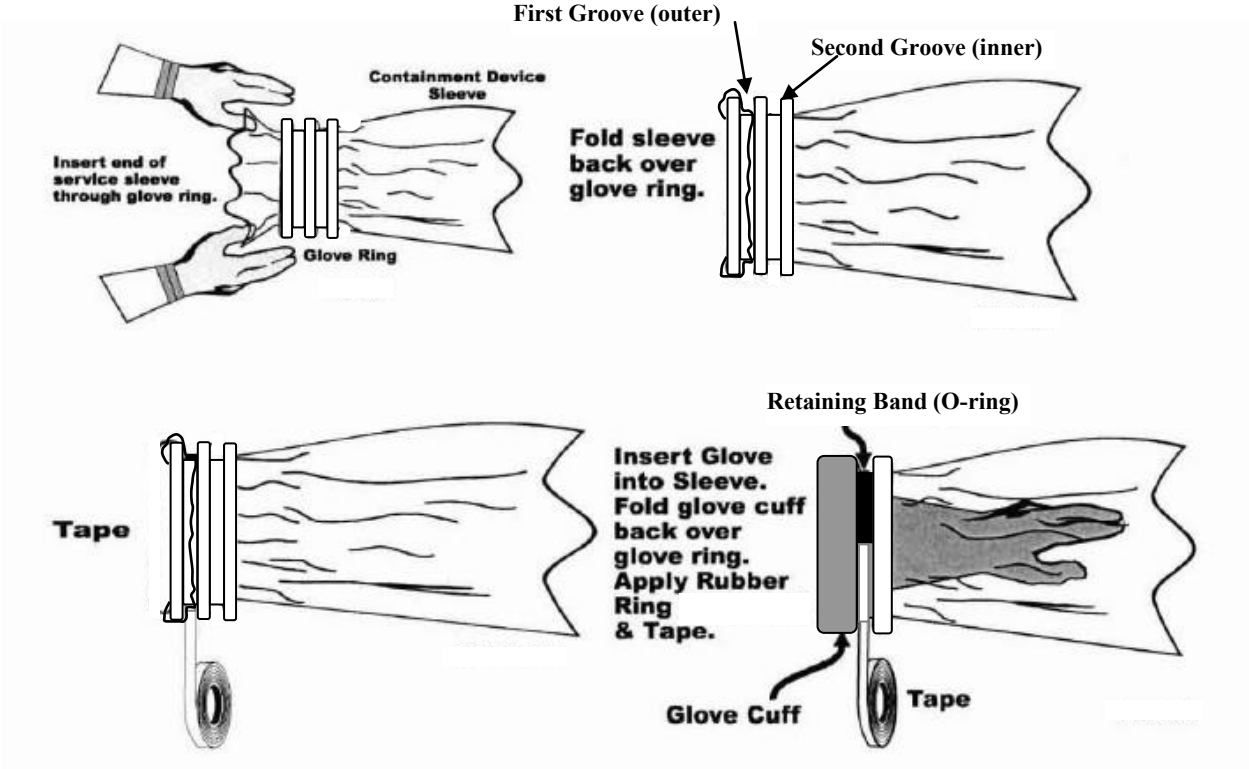

FIGURE 11-1, GLOVEBAG GLOVE RING

[7] **SLOWLY PULL** the glove to the first (outer) groove all the way around, being careful not to pull the glove off of the ring.

[8] **PLACE** the new glove over the old glove and the glove ring, adjusting the new glove so that the new glove is seated in the second (inner) groove.

[9] **REACH** into the new glove, and **GRAB** the old glove.

[10] **HOLDING** the cuff as close as possible to the edge, **PULL** the old glove off of the glove ring at the top.

[11] **PULL** the old glove from the ring, being sure not to pull the new glove away from the glove ring.

11. PERFORMANCE—GLOVEBAG GLOVE CHANGE (continued)

[12] **WHEN** the old glove comes loose from the glove ring,
THEN DROP the old glove into the glovebag.

[13] **INSTALL** the elastic or steel band on the ring over the new glove, ensuring that there are no folds or twists in the band.

[14] **TAPE** over the elastic band or steel band with RP-approved tape, leaving a tab for easy removal.

[15] **RECORD** the glovebag glove installation date and the glove change due date of three years from the manufacturer's date on the new glovebag glove at the top outer lip of the glove, using a permanent marker.

[16] **DOCUMENT** the glove installation in accordance with EP-DIV-AP-0105.

12. PERFORMANCE—BAG-IN/BAG-OUT BAG OPERATIONS

12.1 Bag-in Without Bag Change

This section is a stand-alone section and may be performed independently of or in conjunction with other Performance sections.

NOTE *Two Waste Handling Operators are required for bag-in operations without a bag change.*

Waste Handling Operator

[1] **ENSURE** that all applicable prerequisite actions have been completed.

[2] **DETERMINE** whether there is a sufficient amount of remaining bag-in/bag-out bag to perform a bag-in without a bag change.

[3] **IF** the bag-in/bag-out bag is **NOT** large enough to perform a bag-in without a bag change,
THEN GO to Section 12.2, Bag-in With Bag Change.

NOTE *Figure 12-1, Bag-in Operations, illustrates the bag-in operation.*

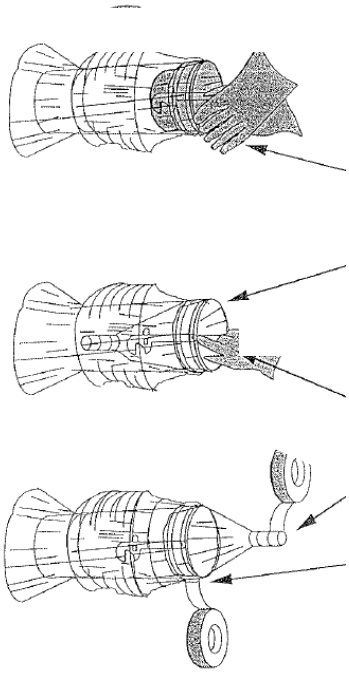

FIGURE 12-1, BAG-IN OPERATIONS

12.1 Bag-in Without Bag Change (continued)

RCT

[4] **PERFORM** surveys of the bag-in activities, as necessary.

Waste Handling Operator

[5] **IF** radiological contamination is detected during the bag-in activities, **THEN FOLLOW** the instructions of the RCT

[6] **HOLD** the bag-in/bag-out bag in place.

[7] **ENSURE** that any sharp edges and points that could cut or puncture the bag have been covered with tape.

[8] **PLACE** the item to be bagged into the glovebag in the pocket formed by the end of the bag-in/bag-out bag.

[9] **GATHER** the open end of the bag-in/bag-out bag together, and seal the open end with RP-approved tape.

[10] **PUSH** the item and the sleeve into the glovebag.

WARNING

Cutting the glovebag bag without a hard surface such as a metallic cutting board behind the cutting action could result in a release of release of radiological contamination from a glovebag breach.

[11] **PLACE** the portion of the bag-in/bag-out bag to be cut over a hard surface such as a metallic cutting board working from inside of the glovebag, and **CUT** an opening in the bag-in/bag-out bag to remove the item.

12.2 Bag-in With Bag Change

This section is a stand-alone section and may be performed independently of or in conjunction with other Performance sections.

NOTE 1 *This section may be performed to replace a bag-in/bag-out bag without bagging in an item by not performing those steps associated with the item.*

NOTE 2 *Two Waste Handling Operators are required for bag-in operations with a bag change.*

Waste Handling Operator

[1] **ENSURE** that all applicable prerequisite actions have been completed.

[2] **INSPECT** the new bag-in/bag-out bag for the following:
- Seams that do not appear intact
- Cuts, holes, and any other defective points
- Improper bag size

[3] **IF** the bag-in/bag-out bag inspection is unsatisfactory,
THEN OBTAIN a new bag-in/bag-out bag and **GO** to Step 12.2[2].

RCT

[4] **PERFORM** surveys of the bag-in activities, as necessary.

Waste Handling Operator

[5] **IF** radiological contamination is detected during the bag-in activities,
THEN FOLLOW the instructions of the RCT

[6] **POSITION** a downdraft unit as directed by an RCT.

[7] **REMOVE** the layer of tape and retaining band (e.g., adjustable clamp) from the bag-in/bag-out bag.

[8] **SLOWLY PULL** the bag-in/bag-out bag to the first groove (outer) or lip all the way around, being careful not to pull the bag-in/bag-out bag off of the ring.

12.2 Bag-in With Bag Change (continued)

[9] **ENSURE** that any sharp edges and points that could cut or puncture the bag-in/bag-out bag have been covered with tape.

[10] **PLACE** the item to be bagged into the glovebag in the new bag-in/bag-out bag.

[11] **PLACE** the new bag-in/bag-out bag over the old glovebag bag and the ring, adjusting the new bag-in/bag-out bag so that the new bag-in/bag-out bag is past the lip of the ring or seated in the second groove (inner), as applicable.

[12] **IF** the ring does not have two grooves,
THEN:

[A] **INSTALL** the retaining band (e.g., adjustable clamp) on the ring over the new glovebag bag.

[B] **TAPE** over the elastic band with RP-approved tape, leaving a tab for easy removal.

[13] **REACH** into the new bag-in/bag-out bag, and **GRAB** the old bag-in/bag-out bag.

[14] **HOLDING** the bag-in/bag-out bag as close as possible to the edge, **PULL** the old bag-in/bag-out bag off of the ring at the top.

[15] **PULL** the old bag-in/bag-out bag from the ring, being sure not to pull the new bag-in/bag-out bag away from the ring.

[16] **WHEN** the old bag-in/bag-out bag comes loose from the ring,
THEN DROP the old bag-in/bag-out bag into the glovebag.

[17] **IF** the ring contains two grooves,
THEN:

[A] **INSTALL** the retaining band (e.g., adjustable clamp) on the ring over the new glovebag bag.

[B] **TAPE** over the elastic band with RP-approved tape, leaving a tab for easy removal.

[18] **PLACE** the item into the glovebag.

12.3 Bag-out Without Bag Change

This section is a stand-alone section and may be performed independently of or in conjunction with other Performance sections.

NOTE *In cases when the bag-in/bag-out bag is too short to bag-out the item the bag-in/bag-out bag must be changed before performing the bag-out, as there is no advantage to doing a bag-out with a bag change.*

Waste Handling Operator

[1] **ENSURE** that all applicable prerequisite actions have been completed.

RCT

[2] **PERFORM** surveys of the bag-out activities, as necessary.

Waste Handling Operator

[3] **IF** radiological contamination is detected during the bag-out activities,
THEN FOLLOW the instructions of the RCT

12.3 Bag-out Without Bag Change (continued)

NOTE *Figure 12-2, Bag-out Operations, illustrates the bag-out operation.*

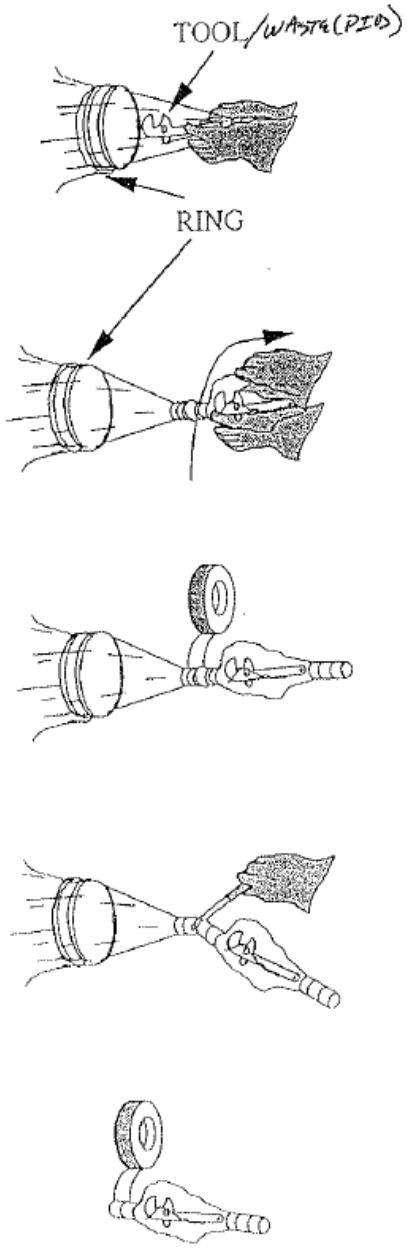

FIGURE 12-2, BAG-OUT OPERATIONS

12.3 Bag-out Without Bag Change (continued)

[4] **POSITION** a downdraft unit as directed by an RCT.

[5] **PREPARE** two tape tabs and **PLACE** the tape tabs in an accessible location.

[6] **ENSURE** that any sharp edges and points that could cut or puncture the bag have been covered with tape.

[7] **GRASP** the item with the bag-in/bag-out bag, and **PULL** the item out of the glovebag.

[8] **MIST** the bag-in/bag-out bag with spray cleaner, and **RUB** the bag together to ensure complete coverage in order to control contamination.

[9] **TWIST** the bag-out bag tightly between the tool and the ring.

[10] **TIGHTLY TAPE** over (approximately 6 to 8 in.) the twisted area of the bag-in/bag-out bag.

[11] **FIRMLY ATTACH** two binding ties near the center of the pigtail, approximately 2 in. apart.

[12] **COVER** the attached binding ties with tape.

[13] **CAREFULLY CUT** through the center of the tape joint.

[14] **WIPE** down the cutters, and **PLACE** the cutters in a holder.

[15] **TAPE** over the pigtail ends with RP-approved tape to seal the bag.

[16] **PACKAGE** and **DISPOSE** of the waste in accordance with the applicable approve procedure.

13. PERFORMANCE—PARENT DRUM BAG-ON/BAG-OFF OPERATIONS

13.1 Parent Drum Bag-On

This section is a stand-alone section and may be performed independently of or in conjunction with other Performance sections.

NOTE *A minimum of two Waste Handling Operators are required to perform drum sleeve cuts.*

Waste Handling Operator

[1] **ENSURE** that all applicable prerequisite actions have been completed.

RCT

[2] **PERFORM** surveys of the glovebag parent drum replacement activity, as necessary.

Waste Handling Operator

[3] **IF** radiological contamination is detected during the glovebag parent drum replacement, **THEN FOLLOW** the instructions of the RCT.

[4] **ENSURE** that a bag/sleeve has been attached to the outside of the parent drum below the first chime in accordance with the applicable procedure (e.g., EP-AREAG-WO-DOP-1084, Sort Segregate, Size Reduction, and Repackaging Activities)

[5] **INSPECT** the internal and external surfaces of new parent drum O-ring bag for the following:

- Layer separations
- Cuts
- Natural degradation
- Cracks
- Stiffness
- Punctures
- Splits
- Obvious physical signs of deterioration
- Discoloration
- Surface deposits/debris
- Filter covers/tabs removed

13.1 Parent Drum Bag-On (continued)

[6] **REMOVE** the retaining band (e.g., adjustable clamp) from the glovebag drum port collar.

[7] **SLIDE** the old parent drum O-ring bag stub down to the outer ring of the glovebag drum port collar.

[8] **SLIDE** a new parent drum O-ring bag over the old parent drum O-ring bag stub.

[9] **APPLY** RP-approved tape to the new parent drum O-ring bag where the retaining band buckle is to be placed.

[10] **SECURE** the new parent drum O-ring bag to the glovebag drum port collar with a retaining band (e.g., adjustable clamp).

[11] **REMOVE** the old parent drum O-ring bag stub and drop the old parent drum O-ring bag stub into the glovebag for placement into a daughter drum.

13.2 <u>Parent Drum Bag-Off</u>

This section is a stand-alone section and may be performed independently of or in conjunction with other Performance sections.

NOTE *A minimum of two Waste Handling Operators are required to perform drum sleeve cuts.*

Waste Handling Operator

[1] **ENSURE** that all applicable prerequisite actions have been completed.

RCT

[2] **PERFORM** surveys of the glovebag parent drum replacement activity, as necessary.

Waste Handling Operator

[3] **IF** radiological contamination is detected during the glovebag parent drum replacement, **THEN FOLLOW** the instructions of the RCT

13.2 Parent Drum Bag-Off (continued)

[4] **POSITION** a downdraft unit as directed by an RCT.

[5] **PREPARE** two tape tabs and **PLACE** the tape tabs in an accessible location.

[6] **MIST** the parent drum O-ring bag with spray cleaner, and **RUB** the bag together to ensure complete coverage in order to control contamination.

[7] **GATHER** the parent drum O-ring bag and **COMPRESS** the parent drum O-ring bag to create a pigtail approximately 6 to 8 in. long.

[8] **TIGHTLY SECURE** the pigtail with RP-approved tape.

[9] **FIRMLY ATTACH** two binding ties near the center of the pigtail, approximately 2 in. apart.

[10] **COVER** the attached binding ties with tape.

[11] **GRASP** the top of the pigtail.

[12] **GRASP** the bottom of the pigtail.

WARNING

The cutting tool is very sharp and could cause severe personnel injury.

[13] **CUT** the pigtail at the middle of the tape.

[14] **WIPE** down the cutters, and **PLACE** the cutters in a holder.

[15] **TAPE** over the pigtail ends using RP-approved tape to seal the O-ring bag stub.

14. PERFORMANCE—DAUGHTER DRUM BAG-ON/BAG-OFF OPERATIONS

14.1 Daughter Drum Bag-On

This section is a stand-alone section and may be performed independently of or in conjunction with other Performance sections.

NOTE *A minimum of two Waste Handling Operators are required to perform O-ring bag cuts.*

Waste Handling Operator

[1] **ENSURE** that all applicable prerequisite actions have been completed.

RCT

[2] **PERFORM** surveys of the glovebag daughter drum replacement activity, as necessary.

Waste Handling Operator

[3] **IF** radiological contamination is detected during the glovebag daughter drum replacement,
THEN FOLLOW the instructions of the RCT.

[4] **ENSURE** that a daughter drum O-ring bag has been placed inside the daughter drum in accordance with EP-AREAG-WO-DOP-1084.

[5] **INSPECT** the internal and external surfaces of new daughter drum O-ring bag for the following:

- Layer separations
- Cuts
- Natural degradation
- Cracks
- Stiffness
- Punctures
- Splits
- Obvious physical signs of deterioration
- Discoloration
- Surface deposits/debris
- Filter covers/tabs removed

14.1 Daughter Drum Bag-On (continued)

[6] **IF** an abnormal internal/external surface is detected,
THEN:

[A] **PROPERLY DISCARD** the daughter drum O-ring bag.

[B] **OBTAIN** a new daughter drum O-ring bag.

[C] **GO** to Step 14.1.[4].

[7] **REMOVE** the old daughter drum O-ring bag stub retaining band from the glovebag drum port collar.

[8] **SLIDE** the old daughter drum O-ring bag stub down to the outer ring of the glovebag drum port collar.

[9] **PULL** a new daughter drum O-ring bag over the old daughter drum O-ring bag stub.

[10] **APPLY** RP-approved tape to the new daughter drum O-ring bag where the retaining band (e.g., adjustable clamp) is to be placed.

[11] **SECURE** the new daughter drum O-ring bag with the retaining band (e.g., adjustable clamp).

[12] **REMOVE** the old daughter drum O-ring bag stub and drop the old daughter drum O-ring bag stub into the attached daughter drum.

14.2 <u>Daughter Drum Bag-Off</u>

This section is a stand-alone section and **may** be performed independently of or in conjunction with other Performance sections.

NOTE *A minimum of two Waste Handling Operators are required to perform O-ring bag cuts.*

Waste Handling Operator

[1] **ENSURE** that all applicable prerequisite actions have been completed.

14.2 Daughter Drum Bag-Off (continued)

RCT

[2] **PERFORM** surveys of the glovebag daughter drum replacement activity, as necessary.

Waste Handling Operator

[3] **IF** radiological contamination is detected during the glovebag daughter drum replacement,
THEN FOLLOW the instructions of the RCT

[4] **POSITION** a downdraft unit as directed by an RCT.

[5] **PREPARE** two tape tabs and **PLACE** the tape tabs in an accessible location.

[6] **MIST** the O-ring bag with spray cleaner, and **RUB** the O-ring bag together to ensure complete coverage in order to control contamination.

[7] **GATHER** the O-ring bag and **COMPRESS** the O-ring bag to create a pigtail approximately 6 to 8 in. long.

[8] **TIGHTLY SECURE** the pigtail with RP-approved tape.

[9] **FIRMLY ATTACH** two binding ties near the center of the pigtail, approximately 2 in. apart.

[10] **COVER** the attached binding ties with tape.

[11] **GRASP** the top of the pigtail.

[12] **GRASP** the bottom of the pigtail.

14.2 Daughter Drum Bag-Off (continued)

WARNING

The cutting tool is very sharp and could cause severe personnel injury.

[13] **CUT** the pigtail at the middle of the tape.

[14] **WIPE** down the cutters, and **PLACE** the cutters in a holder.

[15] **TAPE** over the pigtail ends using RP-approved tape to seal the O-ring bag stub.

15. PERFORMANCE—GLOVEBAG DRUM PORT COLLAR OPERATIONS

NOTE *The glovebag drum port collar may be left attached to the glovebag frame during removal and installation.*

15.1 Glovebag Drum Port Collar Removal

This section is a stand-alone section and may be performed independently of or in conjunction with other Performance sections.

This section provides instructions for removing a glovebag drum port collar from a radiologically contaminated glovebag.

Waste Handling Operator

[1] **ENSURE** that all applicable prerequisite actions have been completed.

[2] **ENSURE** that the parent or daughter drum, as applicable, has been bagged off of the glovebag drum port collar in accordance with the applicable section of this procedure.

[3] **IF** the glovebag drum port collar is to be removed from the glovebag frame, **THEN:**

[A] **ENSURE** that the supports for the glovebag drum port collar have been sufficiently loosened to allow the glovebag drum port to be pulled away from the glovebag.

[B] **EXTEND** and **SUPPORT** the glovebag drum port out from the glovebag a sufficient distance to allow for a bag cut of the glovebag drum sleeve between the glovebag and the glovebag drum port.

RCT

[4] **REQUEST** an RCT perform surveys of the drum port collar removal activity, as necessary.

Waste Handling Operator

[5] **IF** radiological contamination is detected during the glovebag drum port removal, **THEN FOLLOW** the instructions of the RCT

[6] **POSITION** a downdraft unit as directed by an RCT.

15.1 Glovebag Drum Port Collar Removal (continued)

[7] **PREPARE** two tape tabs and **PLACE** the tape tabs in an accessible location.

[8] **MIST** the glovebag drum sleeve with spray cleaner, and **RUB** the bag together to ensure complete coverage in order to control contamination.

[9] **GATHER** the glovebag drum sleeve, and **COMPRESS** the bag to create a pigtail approximately 6 to 8 in. long.

[10] **TIGHTLY SECURE** the pigtail with vinyl tape or filament tape, as necessary.

[11] **FIRMLY ATTACH** two binding ties near the center of the pigtail, approximately 2 in. apart.

[12] **COVER** the attached binding ties with tape.

[13] **GRASP** the top of the pigtail.

[14] **GRASP** the bottom of the pigtail.

WARNING

The cutting tool is very sharp and could cause severe personnel injury.

[15] **CUT** the pigtail at the middle of the tape.

[16] **WIPE** down the cutters, and **PLACE** the cutters in a holder.

[17] **TAPE** over the pigtail ends using RP-approved tape to seal the O-ring bag stub.

15.2 Glovebag Drum Port Collar Installation

This section is a stand-alone section and may be performed independently of or in conjunction with other Performance sections.

This section is used to install a glovebag drum port on a new glovebag.

Waste Handling Operator

[1] **ENSURE** that all applicable prerequisite actions have been completed.

[2] **IF** the glovebag drum port collar is **NOT** secured in the glovebag frame, **THEN ENSURE** that the supports for the glovebag drum port have been sufficiently loosened to allow the glovebag drum port to be inserted into the glovebag.

RCT

[3] **PERFORM** surveys of the glovebag drum port replacement activity, as necessary.

Waste Handling Operator

[4] **IF** radiological contamination is detected during the glovebag drum port replacement, **THEN FOLLOW** the instructions of the RCT.

[5] **ENSURE** that the internal and external surfaces of glovebag drum port collar bag has been inspected for the following:

- Layer separations
- Cuts
- Natural degradation
- Cracks
- Stiffness
- Punctures
- Splits
- Obvious physical signs of deterioration
- Discoloration
- Surface deposits/debris
- Filter covers/tabs removed

15.2 Glovebag Drum Port Collar Installation (continued)

[6] **IF** an abnormal internal/external surface is detected,
THEN:

[A] **NOTIFY** supervision of the glovebag discrepancy and **REQUEST** the applicable actions.

[B] **EXIT** this procedure.

[7] **IF** the glovebag drum port collar is **NOT** secured in the glovebag frame,
THEN SUPPORT the glovebag drum port collar at a distance from the glovebag in order to allow the glovebag drum sleeve to be attached to the glovebag drum port.

WARNING

The internal surfaces of the glovebag drum port collar and attached bag stubs are radiologically contaminated and could result in radiologically contaminating personnel or the environment if exposed to the atmosphere outside of the glovebag.

[8] **REMOVE** the retaining band from the end of the glovebag drum port collar to be attached to the glovebag.

[9] **PULL** the glovebag drum sleeve over the end of the glovebag drum port collar so that the glovebag drum sleeve is seated past the old glovebag drum sleeve stub.

[10] **ATTACH** the retaining band (e.g., adjustable clamp.

[11] **ENSURE** that the glovebag drum port collar is secured within the glovebag drum port collar bracing.

WARNING

Removing the old glovebag drum sleeve from the glovebag drum port exposes the internal radiological contamination of the glovebag drum port and could potentially result in radiologically contaminating the interior of the glovebag.

[12] **WHEN** it has been determined to remove the old glovebag drum sleeve stub from the end of the glovebag drum port inside of the glovebag,
THEN REMOVE the tape from the old glovebag drum sleeve stub from inside of the glovebag.

15.2 Glovebag Drum Port Collar Installation (continued)

[13] **SLIDE** the old glovebag drum sleeve stub off of the glovebag drum port from inside of the glovebag.

[14] **PLACE** the old glovebag drum sleeve stub in an appropriate location within the glovebag for later disposal.

16. POST-PERFORMANCE ACTIVITY

16.1 Disposition

SOS or designee

[1] **IF** any deficiencies were identified,
THEN INITIATE actions to correct the deficiency [e.g., Facility Service Request (FSR) System], and **DOCUMENT** the actions taken (e.g., FSR Issue Number) in the Comments section of the applicable appendices.

NOTE *Completing a Post-Job Review may be accomplished using the applicable P300 form or online (the preferred method since the institution has access to feedback and lessons learned http://int.lanl.gov/safety/iwmc/ [Click on the Submit IWD Part 4, Post-Job Review]).*

Supervision

[2] **IF** any of the following occur:

- A new activity was completed for the first time
- A request was made by anyone involved with the performance of this procedure to perform a post-job review
- An abnormal event occurred
- A revision to an existing procedure was issued and it has been determined by the procedure owner or designee that a Post-Job Review is required

THEN PERFORM a Post-Job Review in accordance with P300.

[3] **IF** the Post-Job Review identified any necessary changes to this procedure,
THEN INITIATE a revision to this procedure.

16.2 Records Processing

Operator or Supervision

[1] Disposition records in accordance with the following:

Record Identification	Record Type Determination	Protection/Storage Method	Processing Instructions
Attachment 1, WDP Daily Glovebag Inspection Tag	Quality Assurance (QA) Record	Records **SHALL** have a reasonable level of protection to prevent loss and degradation. Records should be maintained in a one-hour fire rated metal file cabinet when not in use.	When the records are ready for final disposition, the record is transferred to Records Management in accordance with EP-DIR-AP-10003, records Management Procedure for ADEP Employees.

17. REFERENCES

EP-AREAG-FO-DOP-1087, Work Release Inspection Sheet

EP-AREAG-FO-AP-1097, TA-54 Area G Combustible/Flammable Liquid Control

EP-AREAG-WO-DOP-1084, Sort Segregate, Size Reduction, and Repackaging Activities

EP-AREAG-WO-DOP-0220, TA-54 Area G Building 412 Containment Tent Operator round Sheet

EP-DIV-AP-0105, WDP Glovebox/Glovebag and Glove Safety Program

EP-DIV-AP-0112, WDP Pre-Job Briefing

EP-DIR-AP-10003, records Management Procedure for ADEP Employees

P101-18, Procedure for Pause/Stop Work

P101-25, Cranes, Hoists, Lifting Devices, and Rigging Equipment

P101-28, Glovebox Safety Program

P121, Radiation Protection

P330-6, Nonconformance Reporting

RP-1-DP-65, Radiological Containments

ATTACHMENT 1
Page 1 of 1

WDP DAILY GLOVEBAG INSPECTION TAG

O

This containment has been approved and inspected for use in accordance with RP-1-DP-65

Containment Number: _____

Containment Location: _____

Radiation Protection Approval: _____ / _____ Date:
Signature Z #

Containment Inspection Required: ☐ Daily
(See Requirements on Back of Tag) ☐ Weekly

Signature	Z #	Date

O

Signature	Z #	Date

Containment Inspection Requirements per RP-1-DP-65

1. No visible damage to the containment observed (e.g., holes, tears, or seam separation)
2. Containment is properly tied off
3. Visibility is maintained
4. No standing solutions inside containment
5. Sharp tools or items are <u>not</u> exposed such that they could penetrate the containment or gloves
6. No excess equipment is present inside the containment
7. No equipment is located outside of the identified Safety Zone within the glovebag
8. The downdraft/vacuum cleaner hose and assembly is free of defects or deficiencies
9. Activities outside the glovebag do <u>not</u> jeopardize the integrity of the glovebag
10. Gloves and bag-in/bag-out bags securely attached to the glovebag
11. Glovebag HEPA filter installed and unobstructed
12. Gloves and bags marked with installation and change due date
13. External lighting enough to illuminate operation within glovebag

EP-AREAG-WO-DOP-1238, TA-54 Area G TRU Nitrate Salt Drum Sampling

LAUR-14-24888

TA-54 Area G TRU Nitrate Salt Drum Sampling

Effective Date: 05/07/14

NOTE *This procedure may be either a Moderate or High/Complex Hazard activity based on the anticipated radiation levels during the performance of the activity in accordance with P300 requirements.*

Hazard Class:	☐ Low	☒ Moderate	☒ High/Complex
Usage Mode:	☐ Reference	☒ UET	☐ Both UET & Reference

The Responsible Manager has determined that the following organizations' review/concurrence is required for the initial document and for major revisions a same type and level review is required. Review documentation is contained in the Document History File:

Engineering	Support-Services Subcontractor
Shift Operations Manager	Environmental Stewardship
Quality Assurance	Industrial Hygiene and Safety
Radiation Protection	Subject-Matter Expert
Shift Operation Manager	Criticality Safety
Criticality Safety Officer	Fire Protection Engineer

Responsible Manager, LTP-DDP Operations Manager

Name (print)	Z#	Signature	Date
Louis Jalbert	121997	/s/ Lou Jalbert	05/07/14

Classification Review: ☐ N/A ☒ Unclassified ☐ UCNI ☐ Classified _____

Name (print)	Z#	Signature	Date
Kari Vitaletti	245399	/s/ Kari Vitaletti	05/07/14

Working Copy / Information Only (circle one)

Initials / Date: _____/_____

This document fully satisfies the requirements of P300, Integrated Work Management, in order to systematically describe the work activity, the associated hazards, and the controls that **MUST** be employed to mitigate the risks.

REVISION HISTORY

Document Number	Issue Date	Action	Description
EP-AREAG-WO-DOP-1238, R.0	May 7, 2014	New Document	

TABLE OF CONTENTS

Section Page

TITLE PAGE 1
REVISION HISTORY 2
TABLE OF CONTENTS 3

1. PURPOSE 4

2. SCOPE 4

3. PRECAUTIONS AND LIMITATIONS 4

4. PREREQUISITE ACTIONS 9
4.1 Planning and Coordination 9
4.2 Special Tools and Equipment, Parts, and Supplies 10
4.2.1 Special Tools and Equipment 10
4.2.2 Consumables 11
4.3 Field Preparation 11

5. INSTRUCTIONS—NITRATE SALT DRUM SAMPLING 13

6. POST-PERFORMANCE ACTIVITIES 20
6.1 Disposition 20
6.2 Records Processing 21

7. REFERENCES 22

Attachments
Attachment 1, TA-54 Area G TRU Nitrate Salt Drum Sampling Data Sheet 22

1. PURPOSE

This procedure provides instructions for obtaining a waste sample from transuranic (TRU) waste drums containing nitrate salts that have not been remediated.

2. SCOPE

This procedure applies to Los Alamos National Laboratory (LANL) and subcontractor personnel who perform SSSR activities on TRU waste drums.

The activities identified in this procedure are considered to be sorting, segregating, size reduction, and repackaging (SSSR) activities and the associated SSSR requirements apply.

Drum activities are performed in accordance with EP-AREAG-WO-DOP-1069, TA-54 Area G TRU SWB/Drum Operations.

This procedure is performed in conjunction with the Waste Compliance and Tracking System (WCATS), in order to populate WCATS with waste container information, to generate TRU Waste Storage Records (TWSRs), to generate labels, and to associate new daughter waste containers with the parent waste container.

The SSSR AREA boundary is the same as the DEFINED AREA boundary and the SSSR staging area for the SSSR process area (e.g., contamination control enclosure) is within the boundary of the DEFINED AREA.

The performance of this procedure may be classified as a Moderate or High/Complex Hazard activity based on the potential radiation levels encountered during the performance of this activity. To accommodate the two hazard classifications this document requires the identification of the potential radiation levels that may be encountered.

3. PRECAUTIONS AND LIMITATIONS

- Activities, items, and containers **SHALL** satisfy approved design specification, regulatory requirements, process-specific parameters, and procedural requirements. Activities, items, or containers that do not conform to the approved specifications and requirements are considered nonconforming and Nonconformance Reports (NCRs) **SHALL** be generated in accordance with P330-6, Nonconformance Reporting, as required.

3. PRECAUTIONS AND LIMITATIONS (continued)

- When a worker observes an unsafe condition or act that may pose an imminent danger or other safety concern/hazard, the worker has the authority and responsibility to inform the worker engaged in the work and request that the work activity be paused and/or stopped based on the risk posed to the individual, the employees, the environment, or the facility in accordance with P101-18, Procedure for Pause/Stop Work.

- This procedure contains steps marked with **($)** required to implement key requirements such as the TA-54 Area G Safety Basis (e.g., TSR). These steps may not be changed without engineering approval to ensure the requirements are maintained.

- Those steps of the procedure that are the direct implementation of a criticality safety administrative requirement are identified by a **(*)** and circle-CS symbol (CS) to the left of the step. These steps alert the user that the identified step is part of assuring compliance with criticality safety limits. The identified steps are of equal importance to all other steps from a criticality safety perspective.

- Comply with TA-54 building access requirements, including those established by the Radiological Control Technician (RCT) [e.g., requirements in radiological work permits (RWPs)].

- To comply with the intent of the As Low As Reasonably Achievable (ALARA) Program, all personnel **SHALL** apply the principles of time, distance, and shielding when working with radiological materials.

- **($)** Each SSSR AREA **SHALL** contain less than or equal to 18 PE-Ci EQUIVALENT COMBUSTIBLE WASTE, in-process. [LCO 3.1.1(1)]

- **($)** A spotter **SHALL** be present for TRU waste container lifts planned to exceed 4 ft above the ground surface. If the planned lift will exceed 12 ft from the bottom of the container to the ground, a critical lift plan **SHALL** be used. [Specific Administrative Control. (SAC) 5.7.8(1) and 5.7.8(2)]

- **($)** Each SSSR AREA **SHALL** contain less than or equal to 18 PE-Ci EQUIVALENT COMBUSTIBLE WASTE, staged in closed containers. [LCO 3.1.1(2)]

3. PRECAUTIONS AND LIMITATIONS (continued)

NOTE *A STATIONARY FIRE WATCH is a person stationed at a specific location with no other assigned duties than the purpose of making fire safety observations, notifying building occupants and the fire department of an emergency, preventing a fire from occurring, and/or extinguishing small fires as trained.*

- **($)** An SSSR AREA **SHALL** satisfy the following applicable minimum Thermal Separation Distance requirements: (LCO 3.2.1)
  - 24 ft with non-METAL CONTAINERS
  - 10 ft with non-METAL CONTAINERS with an established STATIONARY FIRE WATCH
  - 10 ft with METAL CONTAINERS

- The Combustible Restricted Area (CRA) is an area that is around and encloses a DEFINED AREA where TRANSIENT COMBUSTIBLES and combustible/flammable liquids are strictly controlled to minimize potential of possible fire incidents. The CRA is marked on controlled engineering approved drawings and is approximated by markings in the field. The markings do <u>not</u> have to exactly represent the drawing, but should closely represent the drawing.

- **($)** Within the DEFINED AREA and associated CRA boundary, Combustible/Flammable Liquids **SHALL** be controlled in accordance with EP-AREAG-FO-AP-1097, TA-54 Area G Combustible/Flammable Liquid Control. (LCO 3.3.1)

- **($)** A continuous STATIONARY FIRE WATCH **SHALL** be present within the SSSR process area (e.g., contamination control enclosure) whenever TRU WASTE is exposed. He or she **SHALL** have no other assigned duties than making fire safety observations, notifying building occupants and the fire department of an emergency, preventing a fire from occurring, and/or extinguishing small fires as trained. (SAC 5.7.17)

- TRU waste outside of a container is considered exposed. TRU waste covered by a fire blanket or other fire retardant material is sufficiently protected from a potential fire and is not considered exposed.

- Personnel protective equipment (PPE) **SHALL** be worn (e.g., safety shoes, safety glasses with side shields, cut resistance gloves, respirator, and hearing protection) as required by the RWP and hazard analysis.

3. PRECAUTIONS AND LIMITATIONS (continued)

- When work cannot be accomplished as described in this procedure, or accomplishment of such work would result in an undesirable situation, a condition adverse to quality, or an unacceptable safety risk, the work **SHALL** be stopped and suspended until the appropriate change provisions are implemented. In the event of suspended operations, notify the LANL Transuranic Waste Program – Drum Disposition Project (LTP-DDP) Operations Manager and the TA-54 Operations Center.

- All drums to be processed **SHALL** have a LTP Waste Remediation Safety Evaluation Data Sheet (EP-DIV-AP-20098, Attachment 1) that has been reviewed and approved by TRU Operations.

CS
- **(*)** The waste contents from multiple parent drums **SHALL** not be placed into a single daughter drum [not applicable for Prohibited Item Disposition (PID) collection containers]. (NCS-CSLA-14-001)

CS
- **(*)** No drums greater than 200 FGE will be remediated in this process. (NCS-CSLA-14-001)

CS
- **(*)** No drums less than 55 gal size will be remediated with this process. (NCS-CSLA-14-001)

CS
- **(*)** Only one parent waste container at a time may be present within an SSSR process area (e.g., contamination control enclosure) that does not have physically separated work areas (e.g., cells). (NCS-CSLA-14-001)

CS
- **(*)** Only the liquid waste from a single parent container may be accumulated within a daughter container (e.g., vacuum) and the liquid may not be absorbed or mixed with solid waste (e.g., sawdust or metal shavings). Absorbed liquid may be mixed with solid waste from the same parent container. (NCS-CSLA-14-001)

- Glass sample vials may contain residual granular materials which can generate sparks when subjected to mechanical agitation. To reduce the possibility of breaking a glass sample vial and the generation of sparks, glass sample vials **SHALL** be handled with care and void volume reduction activities **SHALL** be performed without excessive force. (EP-DIV-REPORT-09)

- Not Applicable (N/A) is documented on the attachments during the performance of this procedure indicating information that is not required to be recorded.

3. PRECAUTIONS AND LIMITATIONS (continued)

- Support Services Subcontractors executing this procedure **SHALL** comply with the safety and health requirements documented in contractual agreements with the LANL.

- The Class 2 laser scanning head on the WCATS mobile device can cause eye injury if eye is exposed to the beam. Do not allow eyes of user or observers to become exposed to laser beam.

- WCATS is designed to allow any task performed on the WCATS mobile device to be conducted from the WCATS desktop application. This feature provides additional flexibility in the event the WCATS mobile device becomes inoperable or malfunctions or the operator may choose to perform a task using either method.

- Compliance with LCO 3.2.1 and the performance of SR 4.2.1.1 for the thermal separation distance are not verified during the performance of this procedure because of the design of the DEFINED AREAS. All DEFINED AREAS are created specifically for receiving either a METAL CONTAINER or non-METAL CONTAINER and WCATS assures compliance by not authorizing a non-METAL CONTAINER to be moved into a METAL CONTAINER only DEFINED AREA. However, a METAL CONTAINER may be moved into a non-METAL CONTAINER DEFINED AREA because the thermal separation distance requirements of the non-METAL CONTAINER DEFINED AREA are greater that the thermal separation distance requirements of the METAL CONTAINER.

- Compliance with LCO 3.1.1 is that each SSSR AREA may contain less than or equal to 18 PE-Ci EQUIVALENT COMBUSTIBLE WASTE in process and less than or equal to 18 PE-Ci EQUIVALENT COMBUSTIBLE WASTE staged in closed containers. The location of the in-process and closed staged waste containers is not stipulated by the Area G TSR other than within the SSSR AREA and therefore closed in-process daughter containers could coexist with closed staged containers outside of the SSSR process area (lower case process area) such as outside of a contamination control enclosure.

- The lifting of drums using the drum hauler unit **SHALL** not exceed 600 lb.

- **($)** LCO 3.1.7 requiring that above-ground TRU waste drums with greater than or equal to 200 PE-Ci be DOUBLEPACKED is not applicable to SSSR activities. (LCO 3.1.7)

4. PREREQUISITE ACTIONS

NOTE *The prerequisite actions may be completed in any order.*

4.1 Planning and Coordination

Supervisor or designee

[1] **ENSURE** that the procedure is the latest revision, and **IDENTIFY** this document as Working Copy or Information Only on the Title Page.

[2] **ENSURE** that SSSR activities are scheduled on the TA-54 Area G facility schedule.

[3] **ENSURE** that an RWP for the planned activity has been issued.

[4] **ENSURE** that a Waste Management Coordinator (WMC) has initiated a Request for Analysis (RFA) for the sampling activity.

[5] **ENSURE** that, as a minimum, the following personnel, trained in the use of this procedure, are available for this procedure, as required:
- Two Operators
- RCTs as required by RWP
- One Supervisor
- **($)** One STATIONARY FIRE WATCH personnel whenever TRU WASTE is exposed [LCO 3.2.1(3) and SAC 5.7.17]
- One Waste Management – Waste Acceptance Services (WM-SVS)
- One Nuclear and Radiochemistry (C-NR)

[6] **ENSURE** that a pre-job briefing is conducted for all personnel involved in the performance of this procedure in accordance with EP-DIV-AP-0112, EWMO Pre-Job Briefings, or other approved process.

[7] **VERIFY** the following with the TA-54 Operations Center:
- DEFINED AREAS involved in the work activities are in the OPERATION MODE.
- Area G is in Staffing Condition 1 (one), as defined in EP-DIV-AP-20059, EWMO Watchbill Administration.

[8] **ENSURE** that a completed LTP Waste Remediation Safety Evaluation Data Sheet (EP-DIV-AP-20098 Attachment 1) has been obtained for each waste container to be processed in accordance with EP-DIV-AP-20098, LTP TRU Waste Remediation Safety Evaluation.

4.1 Planning and Coordination (continued)

[9] **ENSURE** that the TRU daughter waste container labels (e.g., Shorty barcode labels) have been obtained from the Waste Help Team (wastehelp@lanl.gov), as necessary.

4.2 Special Tools and Equipment, Parts, and Supplies

NOTE *The list of special tools and equipment, parts, and supplies is not an all inclusive list and additional tools and equipment may be used as necessary.*

4.2.1 Special Tools and Equipment

Waste Handling Operator

[1] **ENSURE** that the following special tools and equipment are available, as required:

- Casters
- Cutting ratchet/knife
- Certified Drum Lift/Tilt Unit
- Certified Local Exhaust Ventilation Unit (to be used as required by the RCT and RWP)
- Elephant trunks
- Computer/printer
- Dead blow mallet
- Impact wrench
- Drum lid prying tool
- Miscellaneous hand tools (e.g., sockets and wrenches)
- Anti-fatigue mats
- Kevlar® sleeves
- Fire blankets, Metal X fire extinguishers, and ABC fire extinguishers (STATIONARY FIRE WATCH use)
- Face shield or equivalent
- WCATS mobile device
- Infrared thermometer

4.2.2 Consumables

NOTE *The list of consumables is not an all inclusive list and additional consumables may be used as necessary.*

Waste Handling Operator

[1] **ENSURE** that the following consumables are available, as required:

- Kimwipes or equivalent
- Personnel Protective Equipment
- Tape
- Cut-Resistant Gloves (e.g., leather gloves or HexArmor®)
- Nitrile gloves or equivalent
- Cutting tool (e.g., utility knife)
- Radioactive labels
- All-in-One labels
- Fire extinguishing agents (Fire Extinguisher, Type ABC)
- Wetting agent
- Permanent marker
- Fire-retardant plastic sheeting

4.3 Field Preparation

Supervisor or designee

[1] **ENSURE** that the round sheet is completed in accordance with EP-AREAG-WO-DOP-0220, TA-54 Area G Building 412 Containment Tent Operator Round Sheet.

[2] **ENSURE** that the applicable inspection sheet is completed for the work locations in accordance with EP-AREAG-FO-DOP-1087, TA-54 Work Release Inspection Sheets.

[3] **ENSURE** that the applicable hydrogen/volatile organic compounds (VOC) documentation for the batch of drums is provided and indicates a value of less than 6.4% for hydrogen and less than 7,000 ppm for VOCs.

CS [4] **(*) ENSURE** that the waste containers to be moved into the SSSR AREA have been batched in accordance with EP-AREAG-FO-AP-1072. (NCS-CSLA-14-001)

4.3 Field Preparation (continued)

[5] **IF** performing SSSR activities in a radiological contamination control tent, **THEN:**

[A] **ENSURE** that the initial contamination control enclosure approval has been completed in accordance with RP-1-DP-65, Radiological Containments, as required.

NOTE *In accordance with RP-1-DP-65 a containment tent that is in place for greater than 30 days* ***SHALL*** *be re-inspected by the Fire Protection Engineer at an interval* <u>*not*</u> *to exceed 45 days which is documented on the daily inspection checklist.*

[B] **ENSURE** that the contamination controlled enclosure (tent) has been inspected in accordance with RP-1-DP-65.

[C] **ENSURE** that activities outside of the contamination controlled enclosure (tent), such as forklift operations, have been minimized.

[6] **($) ENSURE** that the total volume of flammable liquids within the boundaries of the SSSR AREA for operation and maintenance activities is less than or equal to <u>seven gallons</u>, and **CHECK** (√) SAT or UNSAT on Attachment 1, TA-54 Area G TRU Nitrate Salt Drum Sampling Data Sheet. [LCO 3.3.1(1a)]

NOTE *The daughter waste containers (e.g., 55-gal drums) may be prepared in advance of the waste container sampling activity and at a location other than the SSSR AREA. As such the lids may be temporarily placed on the daughter waste containers to allow them to be safely transported to the SSSR AREA.*

[7] **ENSURE** that a sufficient number of daughter waste containers (e.g., 55-gal drums) are available, as necessary, and have been prepared in accordance with EP-AREAG-WO-DOP-1069 in order to receive the waste material.

[8] **ENSURE** that the new TRU daughter waste containers have been created in WCATS using the TRU DRUM PREPARATION application and that the Shorty barcode labels have been applied to the new TRU daughter waste containers in accordance with EP-DIV-DOP-20043, LTP TRU Waste Container Labeling.

[9] **ENSURE** that the waste container to be processed have been moved into the Building 412 SSSR staging area.

5. INSTRUCTIONS—NITRATE SALT DRUM SAMPLING

This section is a stand-alone section and may be performed independently of, or in conjunction with other Instructions sections of this procedure.

NOTE *Radiological surveys may be performed as determined necessary [e.g., by an RP representative (e.g., RCT)] any time during the performance of this procedure.*

Supervisor or designee

[1] **ENSURE** that the prerequisite actions have been completed.

[2] **CLEAN** the outside of the parent drum to remove possible contaminates using Fantastik or equivalent.

[3] **REQUEST** that RP perform a radiological swipe sample on the outside of the parent drum using the swipe material provided by C-NR and **PLACE** the swipe sample into the container provided by the C-NR group.

NOTE *A STATIONARY FIRE WATCH is a person stationed at a specific location with no other assigned duties than the purpose of making fire safety observations, notifying building occupants and the fire department of an emergency, preventing a fire from occurring, and/or extinguishing small fires as trained.*

[4] **($) ENSURE** that a STATIONARY FIRE WATCH has been established in the SSSR process area (e.g., contamination control enclosure), and **DOCUMENT** on Attachment 1. (SAC 5.7.17)

NOTE *The following step adds the PE-Ci value of the waste drums to the <u>in-process</u> waste container value in the WCATS database and performs SR 4.1.1.1 in order to demonstrate compliance with LCO 3.1.1.(1). The following step is performed before physically moving the waste drums into the SSSR process area (e.g., contamination control enclosure).*

[5] **($) ENSURE** that the WCATS INTRA-FACILITY TRANSFER has been completed for moving the waste drums into the SSSR process area (e.g., contamination control enclosure) using a WCATS mobile device (Grid X of IN-PROCESS). (SR 4.1.1.1)

5. INSTRUCTIONS—NITRATE SALT DRUM SAMPLING (continued)

Waste Handling Operator

CS

[6] **(*) VERIFY** that there are no parent or daughter containers or parent waste in the SSSR process area (e.g., contamination control enclosure). (NCS-CSLA-14-001)

[7] **COVER** the processing area with new fire-retardant plastic.

NOTE *The following step ensures that the waste drums have been physically moved into the SSSR process area (e.g., contamination control enclosure).*

[8] **ENSURE** that the parent drum to be sampled has been moved into the SSSR process area (e.g., contamination control enclosure).

CAUTION

Clean PPE is to be used for each radiological swipe sample in order to prevent the cross-contamination of swipe samples.

NOTE *Radiological swipe samples are taken with the sample media provided by the C-NR group and placed into containers provided by the C-NR group.*

[9] **ENSURE** that the 55-gal parent drum has been removed from the OVERPACK in accordance with EP-AREAG-WO-DOP-1069 and that radiological swipe samples are obtained during the unloading as directed by supervision, as necessary.

[10] **RECORD** the 55-gal parent drum number and sampling start date on Attachment 1.

[11] **REQUEST** that RP perform a radiological swipe samples on the outside of the 55-gal parent drum and inside of the drum hood and **PLACE** the swipe samples into the container provided by the C-NR group.

[12] **RECORD** on Attachment 1 the parent drum RCRA Hazardous Waste designation codes as found on Attachment 1 of EP-AREAG-FO-AP-1072.

[13] **ENSURE** that the TRU daughter waste drums have been moved into the SSSR process area (e.g., contamination control enclosure), as necessary.

5. INSTRUCTIONS—NITRATE SALT DRUM SAMPLING (continued)

[14] **CHOCK/LOCK** drum dollies moved into the SSSR process area (e.g., contamination control enclosure), as necessary.

[15] **ENSURE** that the RP approved controls (e.g., drum hood) have been established for sampling the waste from a 55-gal parent drum.

[16] **OPEN** the drum.

NOTE *The following radiological swipe samples are not required to be 100cm^2 swipe samples due to the potential level of radiological contamination. The swipe sample size is determined by the C-NR group.*

[17] **REQUEST** that RP perform a radiological swipe sample on the inner drum lid of the 55-gal parent drum and **PLACE** the swipe sample into the container provided by the C-NR group.

[18] **REQUEST** that RP perform a radiological swipe sample of the underside of the inner most lid before the plastic and **PLACE** the swipe sample into the container provided by the C-NR group.

NOTE *The following two steps are performed concurrently.*

[19] **REQUEST** that RP perform radiological swipe samples of each layer of confinement as the layers are penetrated and **PLACE** the swipe samples into the containers provided by the C-NR group.

[20] **ACCESS** the 55-gal parent drum waste as necessary to perform a visual inspection and allow access for sampling the waste material.

[21] **VISUALLY EXAMINE** the contents of the 55-gal parent drum, and **DETERMINE** whether the contents of the drum have any unexpected items.

[22] **IF** any unexpected items are present in the 55-gal parent drum,
THEN:

[A] **CLOSE** the parent drum.

5. INSTRUCTIONS—NITRATE SALT DRUM SAMPLING (continued)

[B] **NOTIFY** supervision of the discrepancy, and **REQUEST** the applicable actions.

[C] **DOCUMENT** the discrepancy and applicable actions in the Comments section of Attachment 1.

[D] **($) SECURE** the STATIONARY FIRE WATCH, and **DOCUMENT** on Attachment 1. (SAC 5.7.17)

[E] **PROCEED** as directed by supervision.

[23] **IF** actual or suspected Class 1 oxidizers, flammable metals, or pyrophoric materials/items are encountered,
OR sparking of the 55-gal parent drum contents is observed at any time during the processing of waste material,
THEN:

[A] **PLACE** a fire blanket over the suspect waste material.

[B] **STOP** waste processing.

[C] **NOTIFY** supervision of the situation.

Supervisor

[D] **NOTIFY** the following of the discrepancy, and **DOCUMENT** the notification and discrepancy in the Comments section of Attachment 1:

- TA-54 Operations Center/Shift Operations Manager
- Applicable Operations Manager or designee
- Industrial Hygienist
- Cognizant System Engineer
- WMC

5. INSTRUCTIONS—NITRATE SALT DRUM SAMPLING (continued)

WARNING

Glass sample vials may contain residual granular materials which can generate sparks when subjected to mechanical agitation. To reduce the possibility of breaking a glass sample vial and the generation of sparks, glass sample vials SHALL be handled with care and void volume reduction activities SHALL be performed without excessive force. (EP-DIV-REPORT-09)

CS

NOTE ***(*)*** *Only the contents of a single parent drum may be placed into a daughter container in order to ensure compliance with criticality safety requirements. (NCS-CSLA-14-001)*

[24] **REQUEST** that WM-SVS obtain a composite sample:

[A] **($) OBTAIN** a composite sample from the 55-gal parent drum and **PLACE** the composite sample into an SAC 5.7.12 compliant container. (SAC 5.7.12)

NOTE *The control and movement of the samples is outside of the scope of this procedure.*

[B] **OBTAIN** a sample of less than or equal to 10 cc from the composite sample and **DIVIDE** the sample placing a portion of the sample in each of the two containers provided by C-NR.

[C] **ENSURE** that the SAC 5.7.12 compliant container and sample containers have been closed.

[D] **PLACE** the SAC 5.7.12 compliant container into the 55-gal parent drum.

NOTE *Steps 5.[25] through 5.[28] may be performed in any order and out of sequence in order to allow for the disposition of PPE as operationally necessary.*

[25] **IF** PPE came in contact with the hazardous waste,
THEN REMOVE the PPE and **PLACE** the PPE into a TRU daughter waste container (e.g., 55-gal drum), if possible.

5. INSTRUCTIONS—NITRATE SALT DRUM SAMPLING (continued)

[26] **IF** PPE that came in contact with the hazardous waste **CANNOT** be placed into a TRU daughter waste container,
THEN PACKAGE the PPE into a container in accordance with guidance from the WMC.

[27] **IF** there is PPE that came in contact with hazardous waste from a previous drum,
AND the RCRA Hazardous Waste Codes associated with the previous drum are included in the RCRA Hazardous Waste Codes of the current TRU daughter waste container,
THEN PLACE the PPE into a current TRU daughter waste container, if possible.

[28] **IF** there is PPE that came in contact with hazardous waste from the previous drum,
AND the RCRA Hazardous Waste Codes associated with the previous parent drum are **NOT** included in the RCRA Hazardous Waste Codes of the current TRU daughter waste container,
THEN ENSURE that the PPE has been packaged into a container in accordance with guidance from the WMC.

[29] **ENSURE** that all waste has been placed into a waste container (e.g., 55-gal drum).

NOTE *Hazardous waste containers with liquids (any amount or configuration) that have <u>not</u> been solidified (absorbed) must be managed on secondary containment pallets.*

[30] **WHEN** the 55-gal parent drum sample has been obtained,
THEN ENSURE that the waste within the 55-gal parent drum has been sealed (e.g. plastic bag sealed with tape and drum rigid liner lid replaced) and **CLOSE** the 55-gal parent drum in accordance with EP-AREAG-WO-DOP-1069.

[31] **OVERPACK** the 55-gal parent drum in accordance with EP-AREAG-WO-DOP-1069, as necessary.

Supervision

[32] **($) IF** another drum is **NOT** to be sampled,
THEN SECURE the STATIONARY FIRE WATCH, and **DOCUMENT** on Attachment 1. (SAC 5.7.17)

5. INSTRUCTIONS—NITRATE SALT DRUM SAMPLING (continued)

Waste Handling Operator

[33] **($) MOVE** the closed drum out of the SSSR AREA and **PERFORM** a WCATS INTRA-FACILITY TRANSFER function using a WCATS mobile device or desktop application. (SR 4.1.4.3)

CS [34] **(*) VERIFY** that there are no parent or daughter waste containers within the SSSR process area (e.g., contamination control enclosure). (NCS-CSLA-14-001)

CS [35] **(*) ENSURE** that all TRU waste [e.g., the TRU daughter waste containers and absorbed liquid] are moved out of the SSSR process area (e.g., contamination control enclosure). (NCS-CSLA-14-001)

[36] **RECORD** the date and approximate time that the sampling was completed on Attachment 1.

6. POST-PERFORMANCE ACTIVITIES

6.1 Disposition

Waste Handling Operator

[1] **ENSURE** that name, signature, Z number, and date are completed on Attachment 1.

Supervisor or designee

[2] **REVIEW** Attachment 1for accuracy and completeness.

[3] **IF** any discrepancies are identified,
THEN working with the originator correct the documentation.

[4] **IF** any deficiencies were identified,
THEN INITIATE actions to correct the deficiency [e.g., Facility Service Request (FSR) System], and **DOCUMENT** the actions taken (e.g., FSR Issue Number) in the Comments section of Attachment 1.

[5] **ENSURE** that all flammable liquids have been removed from the SSSR AREA in accordance with EP-AREAG-FO-AP-1097.

[6] **ENSURE** that name, signature, Z number, and date are completed on Attachment 1.

SOS or SOM

[7] **REVIEW** Attachment 1for accuracy and completeness.

[8] **SIGN** and **DATE/TIME** Attachment 1.

[9] **ENSURE** that the TA-54 Area G Compliance Requirements Tracking Schedule and status boards, as applicable, are updated in accordance with EP-DIV-AP-20193, EWMO Compliance Requirements Tracking.

6.1 Disposition (continued)

NOTE 1 *Support-Services Subcontractors are not required to perform a Post-Job Review.*

NOTE 2 *Completing a Post-Job Review may be accomplished using the applicable P300 form or online (the preferred method since the institution has access to feedback and lessons learned* http://int.lanl.gov/safety/iwmc/ *[Click on the Submit IWD Part 4 Post-Job Review]).*

Supervisor or designee

[10] **IF** this procedure is categorized as a moderate or high/complex activity and any of the following occur:

- An activity was completed for the first time
- A request was made by anyone involved with the performance of this procedure to perform a post-job review
- An abnormal event occurred
- A revision to an existing procedure was issued and it has been determined by the procedure owner or designee that a Post-Job Review is required

THEN PERFORM a Post-Job Review in accordance with P300.

[11] **IF** the Post-Job Review identified any necessary changes to this procedure,
THEN INITIATE a revision to this procedure.

6.2 Records Processing

Supervisor or designee

[1] **ENSURE** that documents generated by the performance of this procedure are processed as follows:

Record Identification	Record Type Determination	Protection/Storage Methods	Processing Instructions
Attachment 1, TA-54 Area G TRU Nitrate Salt Drum Sampling Data Sheet	QA Record	Supervision **SHALL** implement a reasonable level of protection to prevent loss and degradation. Records should be maintained in a one-hour fire rated metal file cabinet when not in use.	When the records are ready for final disposition, the record is transferred to Records Management in accordance with EP-DIR-AP-10003, Records Management Procedure for ADEP Employees.

7. REFERENCES

EP-AREAG-FO-AP-1072, TA-54 Area G SSSR AREA TRU MAR Inventory Control

EP-AREAG-FO-AP-1097, TA-54 Area G Combustible/Flammable Liquid Control

EP-AREAG-FO-DOP-1087, TA-54 Work Release Round Sheets

EP-AREAG-WO-DOP-0220, TA-54 Area G Building 412 Containment Tent Operator Round Sheet

EP-AREAG-WO-DOP-1069, TA-54 Area G TRU SWB/Drum Operations

EP-DIR-AP-10003, Records Management Procedure for ADEP Employees

EP-DIV-AP-0112, EWMO Pre-Job Briefings

EP-DIV-AP-20059, EWMO Watchbill Administration

EP-DIV-AP-20098, LTP TRU Waste Remediation Safety Evaluation

EP-DIV-AP-20193, EWMO Compliance Requirements Tracking

EP-DIV-DOP-20043, LTP TRU Waste Container Labeling

EP-DIV-REPORT-09, Engineering Path Forward Report for CMR Wing 2 Containers

NCS-CSLA-14-001, Drum Remediation and Repackaging

P101-18, Procedure for Pause/Stop Work

P300, Integrated Work Management

P330-6, Nonconformance Reporting

RP-1-DP-65, Radiological Containments

ATTACHMENT 1
Page 1 of 1

TA-54 AREA G TRU NITRATE SALT DRUM SAMPLING DATA SHEET

5.[9] 55-gal Parent Drum Number: _____
Sampling start date: _____

4.3[7] **($)** Total volume of flammable liquids within the SSSR AREA boundaries for operation and maintenance activities is ≤ 7 gal: [LCO 3.3.1(1a)] ☐ SAT ☐ UNSAT

5.[4] **($)** STATIONARY FIRE WATCH established. (SAC 5.7.17) _____/_____
Initials/Z# Date

5.[12] 55-gal Parent Drum RCRA Codes: _____
_____

5.[22][D] **($)** STATIONARY FIRE WATCH secured. (SAC 5.7.17) ☐ N/A
_____/_____
Initials/Z# Date

5.[32] **($)** STATIONARY FIRE WATCH secured. _____/_____
Initials/Z# Date

5.[36] Date and approximate time drum sampling completed: _____/_____
Date Time

Comments: _____
_____
_____
_____

6.1[1] Performed By: _____/_____/_____/_____
Operator (Print) Signature Z # Date

6.1[6] Reviewed By: _____/_____/_____/_____
Supervisor/Designee (Print) Signature Z # Date

6.1[8] Reviewed By: _____/_____/_____/_____
SOM or designee (print) Signature Z # Date/Time

EP-AREAG-WO-DOP-1245, TA-54 Area G Empty Nitrate Salt Parent Drum Sampling

LAUR-14-24887

Immediate Procedure Change (IPC) Cover		
Section 1 – Originator Request		
Document No.: EP-AREAG-WO-DOP-1245	Revision No.: 1	IPC No.: 1
Title: TA-54 Area G Empty Nitrate Salt Parent Drum Sampling		

Description of need and requested action (Attach document mark-up and numbered additional sheets, if needed):

Revise procedure to change Step 4.3[8] from "**ENSURE** that one waste container to be sampled has been moved into the Building 412 SSSR staging area" to "**ENSURE** that the waste containers to be sampled have been moved into the Building 412 SSSR staging area." No additional hazards were identified during this IPC.

Originator Name (print):	Organization:	Z#:	Date:
Ron Smart	Procedures	200480	06/24/14

Section 2 –Reviews

Discipline:	Name:	Signature:	Date:
Engineering	Val Rhodes	/s/ Val Rhodes	06/24/14
LTP-DDP SOM	Gen Fernandez	/s/ Gen Fernandez	06/24/14
LTP-SSS SOM	Bob Harder	/s/ Bob Harder	06/24/14
Energy Solutions	Leah Lavallee	/s/ Leah Lavallee	06/24/14
QA	Robert Trujillo	/s/ Robert Trujillo	06/24/14

USQ/USI Number: AREAG-14-322-D, R.0 ☐ N/A

Section 3– Final Approvals

FOD Concurrence:	Print Name and Title:	Z#:	Date:
Bob Harder	Bob Harder	224938	06/24/14
☒ Permanent ☐ Limited Use	Effective Date: 06/24/14 Expiration Date: NA		

Comments: unclassified, Reviewed for classification by Teri Tingey, REG-SP, 6/24/14

Responsible Line Manager Signature:	Print Name and Title:	Z#:	Date:
	Lou Jalbert, LTP DDP Ops Mgr	121997	6/24/14

TA-54 Area G Empty Nitrate Salt Parent Drum Sampling

Effective Date: 06/19/14

Hazard Class: ☐ Low ☒ Moderate ☐ High/Complex
Usage Mode: ☐ Reference ☒ UET ☐ Both UET & Reference

The Responsible Manager has determined that the following organizations' review/concurrence is required for the initial document and for major revisions a same type and level review is required. Review documentation is contained in the Document History File:

Engineering
Shift Operations Manager
Quality Assurance
Radiation Protection
Criticality Safety Officer
Support-Services Subcontractor
Environmental Stewardship
Industrial Hygiene and Safety
Subject-Matter Expert
Criticality Safety
Fire Protection Engineer

Responsible Manager, LTP-DDP Operations Manager

Name (print)	Z#	Signature	Date
Louis Jalbert	121997	/s/ Lou Jalbert	06/19/14

Classification Review: ☐ N/A ☒ Unclassified ☐ UCNI ☐ Classified _____

Name (print)	Z#	Signature	Date
Art Crawford	080070	/s/ Art Crawford	06/18/14

Working Copy / Information Only (circle one)
Initials / Date: _____/_____

This document fully satisfies the requirements of P300, Integrated Work Management, in order to systematically describe the work activity, the associated hazards, and the controls that **MUST** be employed to mitigate the risks.

REVISION HISTORY

Document Number	Issue Date	Action	Description
EP-AREAG-WO-DOP-1245, R.0	June 17, 2014	New Document	
EP-AREAG-WO-DOP-1245, R.1	June 19, 2014	Minor Revision	Revise procedure to incorporate editorial corrections such as step numbering and attachment references. This revision does not introduce any new hazards.
EP-AREAG-WO-DOP-1245, R.1 IPC-1	June 24, 2014	IPC	Revise procedure to change Step 4.3[8] from "**ENSURE** that one waste container to be sampled has been moved into the Building 412 SSSR staging area" to "**ENSURE** that the waste containers to be sampled have been moved into the Building 412 SSSR staging area." No additional hazards were identified during this IPC.

TABLE OF CONTENTS

Section Page

TITLE PAGE 1
REVISION HISTORY 2
TABLE OF CONTENTS 3

1. PURPOSE 4

2. SCOPE 4

3. PRECAUTIONS AND LIMITATIONS 4

4. PREREQUISITE ACTIONS 9
4.1 Planning and Coordination 9
4.2 Materials and Equipment 10
4.2.1 Measuring and Test Equipment (M&TE) 10
4.2.2 Special Tools and Equipment 10
4.2.3 Consumables 11
4.3 Field Preparation 11

5. INSTRUCTIONS—55-GAL DRUM LID PREPARATION 14

6. INSTRUCTIONS—EMPTY NITRATE SALT PARENT DRUM SAMPLING 18

7. POST-PERFORMANCE ACTIVITIES 22
7.1 Disposition 22
7.2 Records Processing 24

8. REFERENCES 24

Appendices
Appendix 1, Nuclear Filter Technology Filtered Vent Seals 26

Attachments
Attachment 1, TA-54 Area G 55-Gal Drum Lid Preparation Data Sheet 27
Attachment 2, TA-54 Area G Empty Nitrate Salt Parent Drum Sampling Data Sheet 28

1. PURPOSE

This procedure provides instructions for obtaining a waste sample from empty parent waste drums that previously contained nitrate salts.

2. SCOPE

This procedure applies to Los Alamos National Laboratory (LANL) and subcontractor personnel who perform empty nitrate salt parent waste drum sampling.

The activities identified in this procedure are considered to be sorting, segregating, size reduction, and repackaging (SSSR) activities and the associated SSSR requirements apply. SSSR requirements **SHALL** be administratively applied to all empty nitrate salt parent drums sampled using this procedure including those drums that have been reclassified as Low-Level Waste (LLW) drums.

Drum activities are performed in accordance with EP-AREAG-WO-DOP-1069, TA-54 Area G TRU SWB/Drum Operations.

This procedure is performed in conjunction with the Waste Compliance and Tracking System (WCATS), in order to populate WCATS with waste container information, to generate TRU Waste Storage Records (TWSRs) and to generate labels.

The SSSR AREA boundary is the same as the DEFINED AREA boundary. The SSSR staging area for the SSSR process area (e.g., contamination control enclosure) is within the boundary of the DEFINED AREA.

3. PRECAUTIONS AND LIMITATIONS

- Activities, items, and containers **SHALL** satisfy approved design specification, regulatory requirements, process-specific parameters, and procedural requirements. Activities, items, or containers that do <u>not</u> conform to the approved specifications and requirements are considered nonconforming and Nonconformance Reports (NCRs) **SHALL** be generated in accordance with P330-6, Nonconformance Reporting, as required.

3. PRECAUTIONS AND LIMITATIONS (continued)

- When a worker observes an unsafe condition or act that may pose an imminent danger or other safety concern/hazard, the worker has the authority and responsibility to inform the worker engaged in the work and request that the work activity be paused and/or stopped based on the risk posed to the individual, the employees, the environment, or the facility in accordance with P101-18, Procedure for Pause/Stop Work.

- This procedure contains steps marked with **($)** required to implement key requirements such as the TA-54 Area G Safety Basis (e.g., TSR). These steps may not be changed without engineering approval to ensure the requirements are maintained.

- Those steps of the procedure that are the direct implementation of a criticality safety administrative requirement are identified by a **(*)** and circle-CS symbol CS to the left of the step. These steps alert the user that the identified step is part of assuring compliance with criticality safety limits. The identified steps are of equal importance to all other steps from a criticality safety perspective.

- Workers **SHALL** comply with TA-54 building access requirements, including those established by the Radiological Control Technician (RCT) [e.g., requirements in radiological work permits (RWPs)].

- To comply with the intent of the As Low As Reasonably Achievable (ALARA) Program, all personnel **SHALL** apply the principles of time, distance, and shielding when working with radiological materials.

- **($)** Each SSSR AREA **SHALL** contain less than or equal to 18 PE-Ci EQUIVALENT COMBUSTIBLE WASTE, in-process. [LCO 3.1.1(1)]

- **($)** A spotter **SHALL** be present for TRU waste container lifts planned to exceed 4 ft above the ground surface. If the planned lift will exceed 12 ft from the bottom of the container to the ground, a critical lift plan **SHALL** be used. [Specific Administrative Control. (SAC) 5.7.8(1) and 5.7.8(2)]

- **($)** Each SSSR AREA **SHALL** contain less than or equal to 18 PE-Ci EQUIVALENT COMBUSTIBLE WASTE, staged in closed containers. [LCO 3.1.1(2)]

3. PRECAUTIONS AND LIMITATIONS (continued)

NOTE *A STATIONARY FIRE WATCH is a person stationed at a specific location with no other assigned duties than the purpose of making fire safety observations, notifying building occupants and the fire department of an emergency, preventing a fire from occurring, and/or extinguishing small fires as trained.*

- **($)** An SSSR AREA **SHALL** satisfy the following applicable minimum Thermal Separation Distance requirements: (LCO 3.2.1)
  - 24 ft with non-METAL CONTAINERS
  - 10 ft with non-METAL CONTAINERS with an established STATIONARY FIRE WATCH
  - 10 ft with METAL CONTAINERS

- The Combustible Restricted Area (CRA) is an area that is around and encloses a DEFINED AREA where TRANSIENT COMBUSTIBLES and combustible/flammable liquids are strictly controlled to minimize the potential of fire. The CRA is marked on controlled engineering approved drawings and is approximated by markings in the field. The markings do <u>not</u> have to exactly represent the drawing, but should closely represent the drawing.

- **($)** Within the DEFINED AREA and associated CRA boundary, Combustible/Flammable Liquids **SHALL** be controlled in accordance with EP-AREAG-FO-AP-1097, TA-54 Area G Combustible/Flammable Liquid Control. (LCO 3.3.1)

- **($)** A continuous STATIONARY FIRE WATCH **SHALL** be present within the SSSR process area (e.g., contamination control enclosure) whenever TRU WASTE is exposed. He or she **SHALL** have no other assigned duties than making fire safety observations, notifying building occupants and the fire department of an emergency, preventing a fire from occurring, and/or extinguishing small fires as trained. (SAC 5.7.17)

- TRU waste outside of a container is considered exposed. TRU waste covered by a fire blanket or other fire retardant material is sufficiently protected from a potential fire and is not considered exposed.

- Personnel protective equipment (PPE) **SHALL** be worn (e.g., safety shoes, safety glasses with side shields, cut resistance gloves, respirator, and hearing protection) as required by the RWP and hazard analysis.

3. PRECAUTIONS AND LIMITATIONS (continued)

- When work cannot be accomplished as described in this procedure, or accomplishment of such work would result in an undesirable situation, a condition adverse to quality, or an unacceptable safety risk, the work **SHALL** be stopped and suspended until the appropriate change provisions are implemented. In the event of suspended operations, notify the LANL Transuranic Waste Program – Drum Disposition Project (LTP-DDP) Operations Manager and the TA-54 Operations Center.

CS
- **(*)** The waste contents from multiple parent drums **SHALL** not be placed into a single daughter drum [not applicable for Prohibited Item Disposition (PID) collection containers]. (NCS-CSLA-14-015)

CS
- **(*)** No drums greater than 200 FGE will be remediated in this process. (NCS-CSLA-14-015)

CS
- **(*)** No drums less than 55 gal size will be remediated with this process. (NCS-CSLA-14-015)

CS
- **(*)** Only one parent waste container at a time may be present within an SSSR process area (e.g., contamination control enclosure) that does not have physically separated work areas (e.g., cells). (NCS-CSLA-14-015)

CS
- **(*)** Only the liquid waste from a single parent container may be accumulated within a daughter container (e.g., vacuum) and the liquid may not be absorbed or mixed with solid waste (e.g., sawdust or metal shavings). Absorbed liquid may be mixed with solid waste from the same parent container. (NCS-CSLA-14-015)

- Not Applicable (N/A) is documented on the attachments during the performance of this procedure indicating information that is not required to be recorded.

- The most current list of WIPP-approved filtered vents are listed on DOE/WIPP 11-3384, CBFO Approved Filter Vents.

3. PRECAUTIONS AND LIMITATIONS (continued)

- Support Services Subcontractors executing this procedure **SHALL** comply with the safety and health requirements documented in contractual agreements with the LANL.

- The Class 2 laser scanning head on the WCATS mobile device can cause eye injury if eye is exposed to the beam. Do not allow eyes of user or observers to become exposed to laser beam.

- WCATS is designed to allow any task performed on the WCATS mobile device to be conducted from the WCATS desktop application. This feature provides additional flexibility in the event the WCATS mobile device becomes inoperable or malfunctions or the operator may choose to perform a task using either method.

- Compliance with LCO 3.2.1 and the performance of SR 4.2.1.1 for the thermal separation distance are not verified during the performance of this procedure because of the design of the DEFINED AREAS. All DEFINED AREAS are created specifically for receiving either a METAL CONTAINER or non-METAL CONTAINER and WCATS assures compliance by not authorizing a non-METAL CONTAINER to be moved into a METAL CONTAINER only DEFINED AREA. However, a METAL CONTAINER may be moved into a non-METAL CONTAINER DEFINED AREA because the thermal separation distance requirements of the non-METAL CONTAINER DEFINED AREA are greater that the thermal separation distance requirements of the METAL CONTAINER.

- Compliance with LCO 3.1.1 is that each SSSR AREA may contain less than or equal to 18 PE-Ci EQUIVALENT COMBUSTIBLE WASTE in process and less than or equal to 18 PE-Ci EQUIVALENT COMBUSTIBLE WASTE staged in closed containers. The location of the in-process and closed staged waste containers is not stipulated by the Area G TSR other than within the SSSR AREA and therefore closed in-process daughter containers could coexist with closed staged containers outside of the SSSR process area (lower case process area) such as outside of a contamination control enclosure.

- The mass of drums lifted using the drum hauler unit **SHALL** not exceed 600 lb.

- **($)** LCO 3.1.7 requiring that above-ground TRU waste drums with greater than or equal to 200 PE-Ci be DOUBLEPACKED is not applicable to SSSR activities. (LCO 3.1.7)

4. PREREQUISITE ACTIONS

NOTE *The prerequisite actions may be completed in any order.*

4.1 Planning and Coordination

Supervisor or designee

[1] **ENSURE** that the procedure is the latest revision, and **IDENTIFY** this document as Working Copy or Information Only on the Title Page.

[2] **ENSURE** that SSSR activities are scheduled on the TA-54 Area G facility schedule.

[3] **ENSURE** that an RWP for the planned activity has been issued, as applicable.

[4] **ENSURE** that a Waste Management Coordinator (WMC) has initiated a Request for Analysis (RFA) for the sampling activity.

[5] **ENSURE** that, as a minimum, the following personnel, trained in the use of this procedure, are available for this procedure, as required:

- Two Operators
- RCTs as required by RWP
- One Supervisor
- **($)** One STATIONARY FIRE WATCH personnel whenever TRU WASTE is exposed [LCO 3.2.1(3) and SAC 5.7.17]
- One Waste Management – Waste Acceptance Services (WM-SVS) representative
- One Chemistry Subject-Matter Expert

[6] **ENSURE** that a pre-job briefing is conducted for all personnel involved in the performance of this procedure in accordance with EP-DIV-AP-0112, EWMO Pre-Job Briefings, or other approved process.

[7] **VERIFY** the following with the TA-54 Operations Center:

- DEFINED AREAS involved in the work activities are in the OPERATION MODE.
- Area G is in Staffing Condition 1 (one), as defined in EP-DIV-AP-20059, EWMO Watchbill Administration.

[8] **ENSURE** that a completed LTP Waste Remediation Safety Evaluation Data Sheet (EP-DIV-AP-20098 Attachment 1) has been obtained for each waste container to be processed in accordance with EP-DIV-AP-20098, LTP TRU Waste Remediation Safety Evaluation.

4.2 Materials and Equipment

4.2.1 Measuring and Test Equipment (M&TE)

NOTE *Torque wrenches are calibrated either as a percentage of full scale or a percentage of indicated value. The torque wrench accuracy information is found on the Calibration Certificate document. Torque wrenches are not calibrated in, nor are they to be used below 20% of their full range.*

Supervisor or designee

[1] **ENSURE** that a calibrated torque wrench capable of torqueing 0 to 144 in-lb (0 to 12 ft-lb) is available, as required.

[2] **IF** a torque wrench has exceeded the calibration due date,
THEN:

[A] **LABEL** or **MARK** the torque wrench as not to be used.

[B] **OBTAIN** another torque wrench that is within the calibration due date.

NOTE *The list of special tools and equipment, parts, and supplies is not an all-inclusive list and additional tools and equipment may be used as necessary.*

4.2.2 Special Tools and Equipment

Waste Handling Operator

[1] **ENSURE** that the following special tools and equipment are available, as required:

- Casters
- Cutting ratchet/knife
- Certified Drum Lift/Tilt Unit
- Certified Local Exhaust Ventilation Unit (to be used as required by the RCT and RWP)
- Elephant trunks
- Computer/printer
- Drum lid prying tool
- Miscellaneous hand tools (e.g., sockets and wrenches)

4.2.2 Special Tools and Equipment (continued)

- Anti-fatigue mats
- Kevlar® sleeves
- Fire blankets, Metal X fire extinguishers, and ABC fire extinguishers (STATIONARY FIRE WATCH use)
- Face shield or equivalent
- WCATS mobile device
- 1-1/2 in. 6 or 12 point socket for filter installation
- Ratchet drive wrench
- WIPP-approved filtered vents (e.g., NucFil-019DS, NucFil-13, or NucFil-072S) tool

4.2.3 Consumables

NOTE *The list of consumables is not an all-inclusive list and additional consumables may be used as necessary.*

Waste Handling Operator

[1] **ENSURE** that the following consumables are available, as required:

- Personnel Protective Equipment as required by RWP
- Tape
- Cut-Resistant Gloves (e.g., leather gloves or HexArmor®)
- Nitrile gloves or equivalent
- Cutting tool (e.g., utility knife)
- Radioactive labels
- All-in-One labels
- Fire extinguishing agents (Fire Extinguisher, Type ABC)
- Wetting agent
- Permanent marker
- Fire-retardant plastic sheeting
- WIPP-approved filtered vents (e.g., NucFil-019DS, NucFil-13, or NucFil-072S)
- Thread-locker (e.g., Loctite® 271 or Loctite® 680)

4.3 Field Preparation

Supervisor or designee

[1] **ENSURE** that the round sheet is completed in accordance with EP-AREAG-WO-DOP-0220, TA-54 Area G Building 412 Containment Tent Operator Round Sheet.

4.3 Field Preparation (continued)

[2] **ENSURE** that the applicable inspection sheet is completed for the work locations in accordance with EP-AREAG-FO-DOP-1087, TA-54 Work Release Inspection Sheets.

[3] **ENSURE** that a hydrogen/volatile organic compounds (VOC) sample has been obtained and that the documentation for each waste container in the batch is provided and indicates a value of less than 25% lower flammability limit (LFL) (1% hydrogen) for hydrogen and less than 6,400 ppm for VOCs.

CS [4] **(*) ENSURE** that the waste container to be moved into the SSSR AREA has been batched in accordance with EP-AREAG-FO-AP-1072. (NCS-CSLA-14-015)

[5] **IF** performing Section 6, Empty Nitrate Salt Parent Drum Sampling,
THEN:

[A] **ENSURE** that the initial contamination control enclosure approval has been completed in accordance with RP-1-DP-65, Radiological Containments, as required.

NOTE *In accordance with RP-1-DP-65 a containment tent that is in place for greater than 30 days **SHALL** be re-inspected by the Fire Protection Engineer at an interval not to exceed 45 days which is documented on the daily inspection checklist.*

[B] **ENSURE** that the contamination controlled enclosure (tent) has been inspected in accordance with RP-1-DP-65.

[C] **ENSURE** that activities outside of the contamination controlled enclosure (tent), such as forklift operations, have been minimized.

[6] **($) ENSURE** that the total volume of flammable liquids within the boundaries of the SSSR AREA for operation and maintenance activities is less than or equal to seven gallons, and **CHECK** (√) SAT or UNSAT on Attachment 2, TA-54 Area G Empty Nitrate Salt Parent Drum Sampling Data Sheet. [LCO 3.3.1(1a)]

4.3 Field Preparation (continued)

NOTE *The most current list of WIPP-approved filtered vents is listed on DOE/WIPP 11-3384.*

[7] **VERIFY** that the waste container to be sampled (e.g., 85-gal overpack drum or 55-gal empty parent drum) has an unobstructed, WIPP-approved filtered vent installed.

IPC-1

[8] **ENSURE** that the waste containers to be sampled have been moved into the Building 412 SSSR staging area.

5. INSTRUCTIONS—55-GAL DRUM LID PREPARATION

This section is a stand-alone section and may be performed independently of, or in conjunction with other Instructions sections of this procedure.

Supervisor or designee

[1] **ENSURE** that the prerequisite actions have been completed.

Waste Handling Operator

[2] **OBTAIN** a new drum closure ring and drum lid.

[3] **VISUALLY INSPECT** the drum lid, gasket, closure ring, bolt and nut for damage that may impact the integrity of the drum using the following criteria:

- No obvious signs of degradation (i.e., no clearly visible and potentially significant defects)
- No potentially significant rust or corrosion such that wall thinning, pinholes, or breaches are likely or load bearing capacity is suspect (i.e., no caked layers or deposits of rust and no rust present in the form of deep metal flaking or built-up areas of corrosion products)
- No split seams, tears, obvious holes, punctures (of any size), creases, broken welds or cracks (i.e., no obvious leaks, holes or openings, cracks, deep crevices, creases, tears, broken welds, sharp edges or pits, are either breached or on the verge of being breached)
- No fastener or locking ring damage or excessive corrosion

[4] **IF** the drum or drum components fail the visual inspection,
THEN:

[a] **IDENTIFY** (e.g., tag or mark) the failed item to indicate that the item is defective.

[b] **SEGREGATE** defective item to prevent re-use.

[c] **NOTIFY** supervision of the discrepancy.

[d] **GO** to Step 5.[2].

[5] **ENSURE** that the 3/4 in. bung has been removed from the drum lid.

[6] **RECORD** the WIPP-approved filtered vent torque wrench information on Attachment 1, TA-54 Area G 55-Gal Drum Lid Preparation Data Sheet.

5. INSTRUCTIONS—55-GAL DRUM LID PREPARATION (continued)

[7] **OBTAIN** a WIPP-approved filtered vent (e.g., NucFil-019DS or NucFil-013).

NOTE *Appendix 1, Nuclear Filter Technology Filtered Vent Seals, illustrates the Skolnik drum Rieke VG1 and VG2 filter configuration.*

[8] **ENSURE** that a WIPP-approved filtered vent to be installed in the drum is equipped with the appropriate seal (gasket or O-ring) as follows:

- Skolnik drum with a Rieke VG1 3/4 in. bung base – Flat, Neoprene Seal
- Skolnik drum with a Rieke VG2 3/4 in. bung base – O-ring Seal

NOTE *Lubricating oil (i.e., WD-40 or equivalent) may be used for cleaning of threads.*

[9] **CLEAN** the threads of the WIPP-approved filtered vents or vent port, as necessary.

[10] **IF** WIPP-approved filtered vents have either an NPT or an American National Straight Pipe Thread for Mechanical Joints (NPSM) threaded body,
THEN REMOVE the rubber gaskets, if desired.

WARNING

Due to skin allergen hazard, nitrile, pylox, or trionic gloves SHALL be worn when applying Loctite®.

[11] **APPLY** a thread-locker (e.g., Loctite® 271 or Loctite® 680) to the first three threads of the WIPP-approved filtered vents.

[12] **ENGAGE** the threads of the WIPP-approved filtered vents in the 3/4 in. plug holes.

NOTE *The number of engaged threads can be determined by counting two full rotations of the WIPP-approved filtered vent.*

[13] **HAND SCREW** the WIPP-approved filtered vents into the 3/4 in. plug holes until a minimum of two WIPP-approved filtered vent threads are engaged in the plug holes.

5. INSTRUCTIONS—55-GAL DRUM LID PREPARATION (continued)

[14] **IF** a WIPP-approved filtered vent **CANNOT** be installed with a minimum of two threads engaged in the plug hole,
AND multiple filters and plug holes have been tried,
THEN:

[A] **REMOVE** the WIPP-approved filtered vent that could not be installed.

WARNING

Tapping threads can create sharp burrs and edges. Wear leather gloves and safety glasses with side shields when tapping threads.

NOTE *A 3/4 in. – 14 NPSM threaded tap is used for SWBs manufactured after April 2011 and a 3/4 in. – 14 NPT threaded tap is used for SWBs manufactured on or before April 2011.*

[B] **TAP** the plug hole using the appropriate size tap (i.e., 3/4 in. – 14 NPSM or 3/4 in. – 14 NPT thread tap).

[C] **REPEAT** Steps 5.[7] through 5.[14].

[15] **IF** a WIPP-approved filtered vent **CANNOT** be installed with a minimum of two threads engaged in the plug hole,
THEN:

[A] **REMOVE** the WIPP-approved filtered vent that could not be installed.

[B] **REPEAT** Steps 5.[8] through 5.[15] using a different WIPP-approved filtered vent or plug hole.

[16] **TORQUE** the WIPP-approved filtered vents to a nominal 120 in.-lb (96 to 144 in.-lb), and **RECORD** the actual torque values on Attachment 1.

[17] **RECORD** the WIPP-approved filtered vent information on Attachment 1.

5. INSTRUCTIONS—55-GAL DRUM LID PREPARATION (continued)

[18] **IF** the drum lid is equipped with a 2-inch bung,
THEN:

[A] **LOOSEN** and **HAND-TIGHTEN** the 2-inch bung.

[B] **TORQUE** the 2-inch bung in accordance with Table 5-1, 2-in. Bung Torque Specifications, and **DOCUMENT** the torque value on Attachment 1.

TABLE 5-1, 2-in. BUNG TORQUE SPECIFICATIONS

Myers									
	Type I – Tri-Sure Octagon Base, Round Head Plug inserted in Tri-Sure Flange						Type II – Rieke Serrated Base, Hexagon Head Plug		
Plug Mat'l	Steel	Steel	Poly	Poly	Poly/Nylon	Poly/Nylon	Steel	Steel	Nylon
Gasket Mat'l	Buna-N and EPDM	Poly	None (Integral)	Buna-N and EPDM	Poly	Buna-N and EPDM	Buna-N and EPT	Poly	Poly and EPT
2"	20 ft-lb	30 ft-lb	12 ft-lb	15 ft-lb	30 ft-lb	20 ft-lb	30 ft-lb	40 ft-lb	20 ft-lb

Skolnik							
Plug Type	Tri-Sure			Rieke (plastic)	Rieke (steel)		Nuc-Fil Filters
Gasket Mat'l	Buna	Poly or Teflon	PE/PP (composite drums)	---	Poly	All others	
2"	20 ft-lb	30 ft-lb	10 ft-lb	20 ft-lb	40 ft-lb	30 ft-lb	---

6. INSTRUCTIONS—EMPTY NITRATE SALT PARENT DRUM SAMPLING

This section is a stand-alone section and may be performed independently of, or in conjunction with other Instructions sections of this procedure.

NOTE *Radiological surveys may be performed as determined necessary [e.g., by an RP representative (e.g., RCT)] any time during the performance of this procedure.*

Supervisor or designee

[1] **ENSURE** that the prerequisite actions have been completed.

[2] **ENSURE** that a new 55-gal drum lid and closure ring have been obtained and prepared in accordance with Section 5, 55-gal Drum Lid Preparation.

[3] **CLEAN** the outside of the drum to remove possible contaminates using Fantastik or equivalent.

Waste Handling Operator

CS [4] **(*) VERIFY** that there are no parent or daughter containers or parent waste in the SSSR process area (e.g., contamination control enclosure). (NCS-CSLA-14-015)

[5] **COVER** the sampling area with new fire-retardant plastic.

NOTE *The following step adds the PE-Ci value of the waste drums to the in-process waste container value in the WCATS database and performs SR 4.1.1.1 in order to demonstrate compliance with LCO 3.1.1.(1). The following step is performed before physically moving the waste drums into the SSSR process area (e.g., contamination control enclosure).*

[6] **($) ENSURE** that the WCATS INTRA-FACILITY TRANSFER has been completed for moving the empty parent drum into the SSSR process area (e.g., contamination control enclosure) using a WCATS mobile device (Grid X of IN-PROCESS). (SR 4.1.1.1)

NOTE *The following step ensures that the waste drums have been physically moved into the SSSR process area (e.g., contamination control enclosure).*

[7] **ENSURE** that the empty parent drum to be sampled has been moved into the SSSR process area (e.g., contamination control enclosure).

6. INSTRUCTIONS—EMPTY NITRATE SALT PARENT DRUM SAMPLING (continued)

[8] **IF** the empty 55-gal parent drum is OVERPACKED (e.g., 85-gal OVERPACK drum), **THEN:**

[A] **REMOVE** the long-stem, self tapping filtered vents (e.g., NucFil-08DS), and **PLACE** the filtered vent into the container provided by C-DIV.

[B] **UNLOAD** the empty parent drum from the OVERPACK in accordance with EP-AREAG-WO-DOP-1069 and **OBTAIN** radiological samples during the unloading as directed by supervision, as necessary.

[9] **RECORD** the empty parent drum number and sampling start date on Attachment 2 and **RECORD** the empty parent drum number on the applicable Attachment 1.

[10] **RECORD** on Attachment 2 the empty parent drum RCRA Hazardous Waste designation codes as found on Attachment 1 of EP-AREAG-FO-AP-1072.

[11] **CHOCK/LOCK** drum dollies moved into the SSSR process area (e.g., contamination control enclosure), as necessary.

NOTE *A STATIONARY FIRE WATCH is a person stationed at a specific location with no other assigned duties than the purpose of making fire safety observations, notifying building occupants and the fire department of an emergency, preventing a fire from occurring, and/or extinguishing small fires as trained.*

[12] **($) ENSURE** that a STATIONARY FIRE WATCH has been established in the SSSR process area (e.g., contamination control enclosure), and **DOCUMENT** on Attachment 2. (SAC 5.7.17)

[13] **ENSURE** that the RP approved controls (e.g., drum hood) have been established for sampling the empty parent drum.

[14] **IF** there is room under the empty parent drum closure ring to install a band, **THEN APPLY** banding material around the empty parent drum just below the drum closure ring and **COVER** (e.g., tape) the sharp edges of the banding buckle.

[15] **REMOVE** the tape and plastic (shower cap) covering the drum lid (e.g., cut the tape and plastic just below the drum closure ring) as directed by an RCT and **REMOVE** the drum lid.

6. INSTRUCTIONS—EMPTY NITRATE SALT PARENT DRUM SAMPLING (continued)

[16] **REMOVE** the empty parent drum filtered vent from the original empty parent drum lid, and **PLACE** the filtered vent into the container provided by C-DIV.

[17] **RECORD** the name and Z number of the individuals obtaining the sample on Attachment 2.

[18] **($) REQUEST** that WM-SVS obtain a drum lid gasket sample as directed by C-DIV and **PLACE** the gasket piece into an SAC 5.7.12 compliant container provided by C-DIV. (SAC 5.7.12)

NOTE *The following step may be performed out of out of sequence.*

[19] **DISPOSITION** the original empty parent drum lid and closure ring as directed by supervision (e.g., place in a bag and into the bottom of an 85-gal OVERPACK drum).

NOTE *The following are the minimum necessary samples to be obtained:*

- *One 100 cm^2 swipe inside of the drum rigid liner labeled with the drum number and destination of the sample (e.g., 69139-48)*
- *Either, depending on availability of waste material and liquid:*
  - *One approximately 10 cc to 50 cc of the original waste matrix (preferably <u>not</u> absorbent) and a separate liquid sample labeled with the drum number and destination of the sample (e.g., 69139-CMR-1)*
  - *Two 100 cm2 swipes inside of the drum rigid liner (under rigid liner upper lip and at lowest point of rigid liner) labeled with the drum number and destination of the sample (e.g., 69139-CMR-1)*
- *Liquid sample, if available, collected as directed by CMR-2 and labeled with the drum number and destination of the sample (e.g., 69139-CMR-2)*
- *Sludge or tar like substance, if available, as directed by CMR-2 and labeled with the drum number and destination of the sample (e.g., 69139-CMR-2)*

[20] **REQUEST** that WM-SVS obtain a sample of the empty parent drum as directed by C-DIV:

[A] **($) ENSURE** that the samples from the empty parent drum have been obtained and **PLACE** each sample into an SAC 5.7.12 compliant container supplied by the applicable sample recipient. (SAC 5.7.12)

NOTE *The control and movement of the samples is outside of the scope of this procedure.*

[B] **ENSURE** that the SAC 5.7.12 compliant sample containers have been closed.

6. INSTRUCTIONS—EMPTY NITRATE SALT PARENT DRUM SAMPLING (continued)

[21] **ENSURE** that all waste has been placed into a waste container (e.g., 55-gal drum).

NOTE *Hazardous waste containers with liquids (any amount or configuration) that have not been solidified (absorbed) must be managed on secondary containment pallets.*

[22] **WHEN** the empty parent drum sample has been obtained,
THEN PLACE a new drum lid and closure ring on the empty parent drum and **CLOSE** the empty TRU parent drum in accordance with EP-AREAG-WO-DOP-1069.

[23] **PREPARE** (e.g., radiological contamination control) the closed, empty parent drum to be overpacked, as necessary, and **OVERPACK** the empty parent drum in accordance with EP-AREAG-WO-DOP-1069, as necessary.

[24] **IF** another empty parent drum is to be sampled,
THEN REPEAT Steps 6.[2] through 6.[23].

Supervision

[25] **($) IF** another empty parent drum is **NOT** to be sampled,
THEN SECURE the STATIONARY FIRE WATCH, and **DOCUMENT** on Attachment 2. (SAC 5.7.17)

Waste Handling Operator

[26] **($) MOVE** the closed drum out of the SSSR AREA and **PERFORM** a WCATS INTRA-FACILITY TRANSFER function using a WCATS mobile device or desktop application. (SR 4.1.4.3)

CS [27] **(*) VERIFY** that there are no parent or daughter waste containers within the SSSR process area (e.g., contamination control enclosure). (NCS-CSLA-14-015)

CS [28] **(*) ENSURE** that all TRU waste are moved out of the SSSR process area (e.g., contamination control enclosure). (NCS-CSLA-14-015)

[29] **PACKAGE** the PPE into a container in accordance with guidance from the WMC.

[30] **RECORD** the date and approximate time that the sampling was completed on Attachment 2, and **ENSURE** that the TA-54 Operations Center is notified of the drum number and that the sampling has been completed for the drum.

7. POST-PERFORMANCE ACTIVITIES

7.1 Disposition

Waste Handling Operator

[1] **ENSURE** that name, signature, Z number, and date are completed on Attachments 1 and 2, as applicable.

Supervisor or designee

[2] **REVIEW** Attachments 1 and 2, as applicable, for accuracy and completeness.

[3] **IF** any discrepancies are identified,
THEN working with the originator to correct the documentation.

[4] **IF** any deficiencies were identified,
THEN INITIATE actions to correct the deficiency [e.g., Facility Service Request (FSR) System], and **DOCUMENT** the actions taken (e.g., FSR Issue Number) in the Comments section of Attachments 1 and 2, as applicable.

[5] **ENSURE** that all flammable liquids have been removed from the SSSR AREA in accordance with EP-AREAG-FO-AP-1097.

[6] **ENSURE** that name, signature, Z number, and date are completed on Attachments 1 and 2, as applicable.

SOS or SOM

[7] **REVIEW** Attachment 2 for accuracy and completeness.

[8] **SIGN** and **DATE/TIME** Attachment 2.

[9] **ENSURE** that the TA-54 Area G Compliance Requirements Tracking Schedule and status boards, as applicable, are updated in accordance with EP-DIV-AP-20193, EWMO Compliance Requirements Tracking.

7.1 Disposition (continued)

NOTE 1 *Support-Services Subcontractors are not required to perform a Post-Job Review.*

NOTE 2 *Completing a Post-Job Review may be accomplished using the applicable P300 form or online (the preferred method since the institution has access to feedback and lessons learned* http://int.lanl.gov/safety/iwmc/ *[Click on the Submit IWD Part 4 Post-Job Review]).*

Supervisor or designee

[10] **IF** this procedure is categorized as a moderate or high/complex activity and any of the following occur:

- An activity was completed for the first time
- A request was made by anyone involved with the performance of this procedure to perform a post-job review
- An abnormal event occurred
- A revision to an existing procedure was issued and it has been determined by the procedure owner or designee that a Post-Job Review is required

THEN PERFORM a Post-Job Review in accordance with P300.

[11] **IF** the Post-Job Review identified any necessary changes to this procedure,
THEN INITIATE a revision to this procedure.

7.2 Records Processing

Supervisor or designee

[1] **ENSURE** that documents generated by the performance of this procedure are processed as follows:

Record Identification	Record Type Determination	Protection/Storage Methods	Processing Instructions
Attachment 1, TA-54 Area G 55-Gal Drum Lid Preparation Data Sheet Attachment 2, TA-54 Area G Empty Nitrate Salt Parent Drum Sampling Data Sheet	QA Record	Supervision **SHALL** implement a reasonable level of protection to prevent loss and degradation. Records should be maintained in a one-hour fire rated metal file cabinet when not in use.	When the records are ready for final disposition, the record is transferred to Records Management in accordance with EP-DIR-AP-10003, Records Management Procedure for ADEP Employees.
Chain-of-Custody form			C-NR personnel will provide form at the time of sampling and the form **SHALL** travel with the samples at all times. The original form **SHALL** be retained by the current sample custodian. When the records are ready for final disposition, the record is transferred to Records Management in accordance with P1020-1, Laboratory Records Management.

8. REFERENCES

DOE/WIPP 11-3384, CBFO Approved Filter Vents

EP-AREAG-FO-AP-1072, TA-54 Area G SSSR AREA TRU MAR Inventory Control

EP-AREAG-FO-AP-1097, TA-54 Area G Combustible/Flammable Liquid Control

EP-AREAG-FO-DOP-1087, TA-54 Work Release Round Sheets

EP-AREAG-WO-DOP-0220, TA-54 Area G Building 412 Containment Tent Operator Round Sheet

EP-AREAG-WO-DOP-1069, TA-54 Area G TRU SWB/Drum Operations

8. REFERENCES (continued)

EP-DIR-AP-10003, Records Management Procedure for ADEP Employees

EP-DIV-AP-0112, EWMO Pre-Job Briefings

EP-DIV-AP-20059, EWMO Watchbill Administration

EP-DIV-AP-20098, LTP TRU Waste Remediation Safety Evaluation

EP-DIV-AP-20193, EWMO Compliance Requirements Tracking

EP-DIV-DOP-20043, LTP TRU Waste Container Labeling

EP-DIV-POLICY-20057, EWMO Health and Safety Policy – Manual Movement

EP-DIV-REPORT-09, Engineering Path Forward Report for CMR Wing 2 Containers

NCS-CSLA-14-015, Building 412, Dome 231, and Dome 375 Contamination Control Enclosures Remediation of 55-gallon or Larger Drums

P101-18, Procedure for Pause/Stop Work

P300, Integrated Work Management

P330-6, Nonconformance Reporting

P1020-1, Laboratory Records Management

RP-1-DP-65, Radiological Containments

APPENDIX 1
Page 1 of 1

NUCLEAR FILTER TECHNOLOGY FILTERED VENT SEALS

Figure 1-1, Skolnik Rieke VG1 3/4 in. Bung Base and Flat, Neoprene Seal

Figure 1-2, Skolnik Rieke VG2 3/4 in. Bung Base and O-ring Seal

ATTACHMENT 1
Page 1 of 1

TA-54 AREA G 55-GAL DRUM LID PREPARATION DATA SHEET

6.[9] Empty Parent Drum Number: _____

5.[6] Torque wrench information:

- M&TE No.: _____
- Cal. Expiration Date: _____
- Tolerance: _____

- Torque wrench listed above is within the acceptable ranges as displayed on the calibration certificate. ☐ YES ☐ NO

Performed By: _____ / _____ / _____ / _____
Operator (print) Signature Z # Date

5.[16] Filtered Vent torque value [120 in-lb (96 to 144 in-lb)]: _____ in-lb

5.[17] WIPP-approved filtered vent information:

Manufacturer: _____
Model No.: _____
Serial No.: _____
Manufacture Date: _____

5.[18][B] 2 in. bung plug torque value: _____ ft-lb

Comments: _____

7.1[1] Performed By: _____ / _____ / _____ / _____
Operator (Print) Signature Z # Date

7.1[6] Reviewed By: _____ / _____ / _____ / _____
Supervisor/Designee (Print) Signature Z # Date

ATTACHMENT 2
Page 1 of 1

TA-54 AREA G EMPTY NITRATE SALT PARENT DRUM SAMPLING DATA SHEET

6.[9] Empty Parent Drum Number: _____
Sampling start date: _____

4.3[6] **($)** Total volume of flammable liquids within the SSSR AREA boundaries for operation and maintenance activities is ≤ 7 gal: [LCO 3.3.1(1a)] ☐ SAT ☐ UNSAT

6.[10] Empty Parent Drum RCRA Codes: _____
_____

6.[12] **($)** STATIONARY FIRE WATCH established. (SAC 5.7.17) _____ / _____
Initials/Z# Date

6.[17] Individuals obtaining samples: _____ / _____
Name (print) Z#

_____ / _____
Name (print) Z#

6.[25] **($)** STATIONARY FIRE WATCH secured. _____ / _____
Initials/Z# Date

6.[30] Date and approximate time drum sampling completed: _____ / _____
Date Time

Comments: _____
_____
_____
_____
_____
_____
_____

7.1[1] Performed By: _____ / _____ / _____ / _____
Operator (Print) Signature Z # Date

7.1[6] Reviewed By: _____ / _____ / _____ / _____
Supervisor/Designee (Print) Signature Z # Date

7.1[8] Reviewed By: _____ / _____ / _____ / _____
SOM or designee (print) Signature Z # Date/Time

EP-WCRR-WO-DOP-1103, WCRRF LLW Handling, Processing, Storage, and Shipment

LAUR-14-24886

WCRRF LLW Handling, Processing, Storage, and Shipment

Effective Date: 4-28-2014

Hazard Class:	☐ Low	☒ Moderate	☐ High/Complex
Usage Mode:	☐ Reference	☐ UET	☒ Both UET & Reference

The Responsible Manager has determined that the following organizations' review/concurrence is required for the initial document, and for major revisions a same type and level review is required. Review documentation is contained in the Document History File:

Engineering
Fire Protection Engineering
Industrial Hygiene and Safety
Quality Assurance
Radiation Protection
Shift Operations Manager
Waste Management

Responsible Manager, LTP-DDP Operations Manager

L Jalbert	/121997	/ /s/ John Guadagnoli/ L Jalbert	/ 4-17-2014
Name (print)	Z#	Signature	Date

Classification Review: ☐ N/A ☐ Unclassified ☐ UCNI ☐ Classified _____

A Crawford	/080070	//s/ Art Crawford	/4-17-2014
Name (print)	Z#	Signature	Date

Working Copy / Information Only (circle one)
Initials / Date: _____/_____

This document fully satisfies the requirements of P300, Integrated Work Management, in order to systematically describe the work activity, the associated hazards, and the controls that **MUST** be employed to mitigate the risks.

REVISION HISTORY

Document No./Revision No.	Issue Date	Action	Description
EP-WCRR-WO-DOP-1103 R.0	Approved for Training	New	New procedure for LLW container preparation, inspection and repackaging LLW for transferring out of WCRRF. A Job hazard analysis was developed for this procedure and the controls were incorporated into the procedure through Cautions, Warnings, and Precautions and Limitations. No rev bars this is a new procedure.
EP-WCRR-WO-DOP-1103 R.1	April 28, 2014	Major Revision	Revised to incorporate additional requirements for Radiological controls, and additional combustible waste packaging and loading requirements. Revision 0 will be submitted to Document control for documentation but will not be published. Revision 0 was approved but never released. No additional hazards were identified during this revision. No rev bars total rewrite.

TABLE OF CONTENTS

Section Page

TITLE PAGE 1
REVISION HISTORY 2
TABLE OF CONTENTS 3

1. PURPOSE 5

2. SCOPE 5

3. PRECAUTIONS AND LIMITATIONS 5

4. PREREQUISITE ACTIONS 8
4.1 Planning and Coordination 8
4.2 Performance Documents 9
4.3 Materials and Equipment 9
4.3.1 Measuring and Test Equipment (M&TE) 9
4.3.2 Special Tools and Equipment 10
4.3.3 Consumables 11

5. PERFORMANCE— LLW EMPTY CONTAINER PREPARATION 12
5.1 LLW Container Inspection 12
5.2 Container Preparation 14

6. PERFORMANCE— LLW PACKAGING PREPARATION AND STAGING AT WCRRF BUILDING TA-50-69 15
6.1 Combustible Waste Receptacle Setup, Collection, and Processing 15
6.2 LLW Packaging destined to NNNS 18

7. PERFORMANCE— UNPACKING AND REPACKAGING COMBUSTIBLE LLW DESTINED FOR NNSS 20

8. PERFORMANCE—RADIOACTIVE STAGING AREA INSPECTIONS 26

9. POST-PERFORMANCE ACTIVITY 27
9.1 Disposition 27
9.2 Records Processing 28

10. REFERENCES 29

TABLE OF CONTENTS (continued)

Section Page

Appendices
Appendix 1, Manual Drum Movement Special Instructions 30

Attachments
Attachment 1, LLW Container Inspection and Packaging Data Sheet 31
Attachment 2, Radioactive Waste Staging Area Monthly Inspection Form (Example) 33
Attachment 3, LLW Weekly Inventory and Update Inventory Form 35
Attachment 4, LLW Package Log Inventory Data Logsheet 36
Attachment 5, LLW Temporary Tamper Indicating Device Logsheet 37

1. PURPOSE

This procedure provides the instructions and requirements for Low Level Waste (LLW) container preparation, inspection, handling, processing, managing, and transfers at the Waste Characterization, Reduction, and Repackaging Facility (WCRRF) in accordance with P930-1, Los Alamos National Laboratories (LANL) Waste Acceptance Criteria (WAC), and P409, Waste Management, to Technical Area (TA)-54 Area G.

2. SCOPE

This procedure provides the instructions for performing the following activities:

- LLW empty container preparation
- Unpacking and repackaging combustible LLW destined for Nevada National Security Site (NNNS)
- LLW radioactive staging/management area

This procedure does not provide instruction for packaging and handling transuranic waste at WCRRF.

3. PRECAUTIONS AND LIMITATIONS

- During severe weather conditions with the potential of generating a lightning strike outdoors, waste activities **SHALL** be suspended and waste containers placed in a safe configuration as determined by supervision. Outdoor waste activities **SHALL** not resume until the severe weather has subsided.

- Drum dollies present a rolling hazard which could result in personnel injury due to a drum rolling over an individual's foot or due to a collision with a rolling drum. Proper foot protection (i.e., safety shoes) will be used

- This procedure contains special procedure step markings. **($)** is used to identify steps that implement WCRRF Safety Basis requirements. Steps containing **($)** may not be changed without Engineering approval to ensure the safety envelope is maintained.

- Activities, items, and containers **SHALL** satisfy approved design specifications, regulatory requirements, process-specific parameters, and procedural requirements. Activities, items, or containers that do not conform to the approved specifications and requirements are considered nonconforming and Nonconformance Reports (NCRs) **SHALL** be generated in accordance with P330-6, Nonconformance Reporting, as required.

3.0 PRECAUTIONS AND LIMITATIONS (continued)

- When a worker observes an unsafe condition or act that may pose an imminent danger or other safety concern/hazard, the worker has the authority and responsibility to inform the worker engaged in the work and request that the work activity be paused and/or stopped based on the risk posed to the individual, the employees, the environment, or the facility in accordance with P101-18, Procedure for Pause/Stop Work.

- Not Applicable (N/A) is documented on the attachments during the performance of this procedure indicating information that is not required to be recorded.

- Waste containers can have sharp edges and may create pinch points when being handled. Personnel **SHALL** use the appropriate drum handling equipment and PPE, such as cut resistance (e.g., leather) gloves, when handling drums.

- At no time is any individual permitted to place any portion of their body under a suspended load.

- To comply with the intent of the As Low As Reasonably Achievable (ALARA) Program, all personnel **SHALL** apply the principles of time, distance, and shielding when working with radiological materials.

- Supervision **SHALL** be notified if this procedure cannot be performed as written.

- Forklift movements present unique hazards; ensure work area is clear of hazards and unneeded equipment. All personnel should be briefed on the planned work.

- The weight of load should be known before moving and the appropriate capacity lift selected. Ensure loads are centered on the fork tines to prevent load shift or loss. Be aware of uneven loading and shifts in the load when moving.

- Forklift operations at WCRRF are performed in accordance with EP-DIV-DOP-20086, EWMO Division Specific Forklift and Drum Handler Operations, and institutional forklift operator training. The hazards and controls associated with forklift operations are addressed in this document and training.

- **($)** Propane, gasoline, or diesel-fueled vehicles **SHALL** <u>not</u> be used anywhere at the WCRRF when INVENTORY is present at the WCRRF. Exceptions: (1) Emergency vehicles in the case of any emergency. (2) Equipment with less than 5 gal of fuel may be used for grounds maintenance and for snow and ice removal. (SAC 5.10.1.1)

3. PRECAUTIONS AND LIMITATIONS (continued)

- All movements (e.g., lifting, sliding, or moving) of 55-gal and larger drums, whether empty or containing waste, SHALL be performed using a mechanical assistance (e.g., pallet jack, drum hauler, or forklift) in accordance with EP-DIV-SO-20057, EWMO Health and Safety Policy-Manual Movement

- During high temperature and humidity days, while using respirators and impermeable or multilayered work clothing which limits air movement, or during high-physical exertion individuals must be aware of potential heat stress. It must be noted that poor physical condition, some medicines, and inadequate tolerance for hot workplaces may result in elevated potential to heat stress. In order to reduce the potential of heat stress the following activities should be practiced:
  - Allow sufficient time for proper acclimatization to heat
    - Increase fluid and electrolyte intake before, during and after work
    - Drink in designated break areas
  - Use an industrial hygiene and safety approved work/rest regimen
  - Recognize the early symptoms of heat stress
  - Consider heat stress when selecting personal protective equipment

- Job-related heat stress varies due to environmental conditions, type of work, metabolic rate, and clothing requirements. When heat stress monitoring is conducted, supervision and the industrial hygiene and safety team **SHALL** assess heat stress hazards and recommend control measures as warranted.

- Do <u>not</u> disturb or touch wild animals, dead animals, nesting areas, droppings, or surfaces with mold growth to avoid exposure to biological threats (e.g., snakes, rodents, rodent droppings, Hanta virus, Bubonic plague, spiders, West Nile virus, molds).

- Subcontractor's executing this DOP are expected to follow the safety requirements set forth in their contractual agreements with the Laboratory. Contact the STR for clarification on subcontractor safety requirements.

4. PREREQUISITE ACTIONS

NOTE *The listed prerequisite actions may be completed in any order.*

4.1 Planning and Coordination

WCRRF SOS

[1] **ENSURE** that the performance of this procedure has been scheduled on the WCRRF schedule.

[2] **ENSURE** that a pre-job briefing is conducted for all personnel involved in the performance of this procedure, in accordance with EP-DIV-AP-0112, EWMO Pre-Job Briefings.

[3] **ENSURE** that the procedure is the latest revision, and **IDENTIFY** this document as a Working Copy or Information Only on the Title Page.

[4] **ENSURE** that an RWP for the planned activity has been issued.

[5] **ENSURE** that, as a minimum, the following personnel are trained to the use of this procedure are available for the performance of this procedure, as required:
- Two Waste Handling Technicians
- One Radiation Control Technician (RCT)
- One Waste Management Coordinator (WMC) (as applicable)

[6] **($) ENSURE** WCRRF Building TA-50-69 is in the OPERATIONS MODE when performing LLW processing activities Section 7, Unpacking and Reloading LLW Containers) and **CHECK** (√) YES or NO on Attachment 1, LLW Container Inspection and Reloading Data Sheet. (TSR 1.2)

[7] **IF** processing waste to be certified for disposal to the Nevada National Security Site (NNSS),
THEN ENSURE a NNSS WPC is present for inspection and approval of the LLW destined for NNSS.

Waste Handling Technician

[8] **IF** industrial equipment (i.e., forklift, rotogrip) is to be used for this evolution,
THEN ENSURE the equipment is inspected in accordance with EP-DIV-DOP-20086, EWMO Division Specific Forklift and Drum Handler Equipment Operations.

.

4.2 Performance Documents

Waste Handling Technician or Supervision

[1] **ENSURE** that the approved WCRRF Waste Profiles (paper copy) from Waste Compliance and Tracking System (WCATS) are available for LLW packaging is available, as required.

4.3 Materials and Equipment

4.3.1 Measuring and Test Equipment (M&TE)

[1] **ENSURE** that the following MT&E are available, as required:

- Calibrated torque wrench capable of torquing 0 to 144 in-lb (0 to 12 ft-lb)
- Calibrated torque wrench capable of torquing 12 to 40 ft-lb
- Calibrated torque wrench capable of torquing 55 to 75 ft-lb
- Calibrated Platform scale

[2] **DOCUMENT** the following scale information on Attachment 1:

- Verification Date
- Scale ID No.
- Manufacturer
- Model
- Calibration Due Date

[3] **DOCUMENT** torque wrench ID number and calibration due date on Attachment 1.

[4] **IF** a torque wrench has exceeded the calibration due date,
THEN:

[A] **LABEL** or **MARK** the torque wrench as not to be used.

[B] **OBTAIN** a new torque wrench.

[C] **REPEAT** from Step 4.3.1[2].

[5] **IF** any scales (floor, portable) have exceeded the calibration due date,
THEN NOTIFY supervision for the applicable actions.

4.3.1 Measuring and Test Equipment (M&TE) (continued)

NOTE 1 *Torque wrenches are calibrated either as a percentage of full scale or a percentage of indicated value. The torque wrench accuracy information is found on the Calibration Certificate document. Torque wrenches are not calibrated in, nor are they to be used in, the lower 20% of their range.*

NOTE 2 *The list of special tools and equipment is not an all inclusive list and additional tools and equipment may be used as necessary.*

4.3.2 Special Tools and Equipment

[8] **ENSURE** that the following special tools and equipment are available, as required:

- Equipment to move containers, such as a forklift, RotoGrip or drum dolly
- Cut resistant (e.g., leather gloves)
- Rubber hammer or dead-blow mallet
- Ratchet drive wrench
- 1/2 in. ratchet drive wrench
- 1-5/16 in. socket
- 1-5/16 in. open end or box wrench
- Inspection mirror or equivalent
- Flashlight
- Pallets
- Slings
- Lifting equipment

4.3.3 Consumables

Waste Handling Technician or Supervision

[1] **ENSURE** that the following consumables are available, as applicable:

- Absorbent mMaterials (e.g., kitty liter)
- Cardboard bBoxes
- Kitty litter
- LLW lLabels
- Plastic liners
- Rags
- Shipping cContainers
- 2- in. duct tape
- 55-gal drum cardboard liner
- 55-gal drum liner bag
- Kimwipes or equivalent
- Fantastik or equivalent
- Yellow vinyl tape

5. PERFORMANCE— LLW EMPTY CONTAINER PREPARATION

This section may be performed independently or in conjunction with other sections. Unless otherwise noted, the steps are to be performed in sequence.

WARNING

1. **Drums can have sharp edges and may create pinch points when being handled. Personnel are required to use the appropriate drum handling equipment and PPE, such as cut resistance (e.g., leather) gloves, when handling drums.**

2. **Proper lifting techniques and the buddy system are required to be employed when performing heavy lifting or movements in order to prevent personnel injuries.**

NOTE *All manual drum movement will be performed in accordance with Appendix 1, Manual Drum Movements Special Instructions and EP-DIV-Policy-20057, EWMO Health and Safety Policy-Manual Movement.*

Waste Handling Technician

[1] **ENSURE** that the prerequisite actions have been completed.

[2] **OBTAIN** the appropriate empty LLW container, size, and type (e.g., 55-gal drum, 85-gal, LB-99, ST-90, B-12, B-25, ST-45) as diected by WMC.

5.1 <u>LLW Container Inspection</u>

WCRRF Waste Handing Technician

[1] **VISUALLY INSPECT** the exterior portion of the LLW container using the criteria listed below, and **CHECK** (√) SAT or UNSAT on Attachment 1:

- No potential rust or corrosion, holes, breaches
- No splits, tears, in seems obvious holes punctures, creases, broken welds
- No water damage, significant rust on outside of container top or bottom
- UN number visible
- DOT number visible

5.1 LLW Container Inspection (continued)

WARNING

Waste container box lids (LB-99, and ST-90) are awkward and weigh approximately 50 lbs. Handling of box lids are required to be performed using the buddy system. Failure to comply with these recommended practices may result in personal injury.

[2] **REMOVE** the **LLW** container lid and visually inspect the inner portion of the LLW container using the criteria listed below and **CHECK** (√) SAT or UNSAT on Attachment 1.

- No potential rust or corrosion, holes, or breaches
- Water damage, significant rust on inside of container
- Lid assembly components satisfactory (e.g., ring, bolt, shims, lid gasket, latches)

[3] **IF** any of the inspection criteria listed in Step 5.1 [1] and [2] is checked (√) UNSAT, **THEN:**

[A] **NOTIFY** the Shift Operations Supervisor (SOS) for guidance and direction.

[B] **MARK** the LLW container "REJECT" and **DISPOSITION** container.

[C] **GENERATE** a Non-Conformance Report (NCR) Form. http://enterprise.lanl.gov/forms/2082.doc

[D] **GO TO** Step 5.[2].

[4] **REPLACE** the LLW lid on the LLW container.

[5] **IF** the LLW container does **NOT** display the tare weight on the outer portion of the container,
THEN WEIGH the LLW container on a calibrated scale.

[6] **ENSURE** that the tare weight is marked on the on the side of the LLW container using a marker (e.g., sharpie).

5.2 Container Preparation

Waste Handling Technician

[1] **PREPARE** the LLW container in accordance with Section 7 of the specific Waste Profile and/or Waste Management Coordinator guidance as applicable.

[2] **RECORD** the LLW container tare weight in pounds and/or kgs on Attachment 1.

WARNING

Waste container box lids (LB-99, and ST-90) are awkward, may have sharp edges and weigh approximately 50 lbs. Handling of box lids are required to be performed while wearing cut-resistant gloves and using the buddy system. Failure to comply with these recommended practices may result in personal injury.

[3] **IF** the LLW container requires inner packaging (e.g., plastic bags) in accordance with Section 7 of the specific Waste Profile in WCATS and/or as directed by a NNSS waste certifier guidance,
THEN PLACE the appropriate inner packaging materials into the LLW container for later use.

[4] **IF NOT** processing, unpacking, and/or reloading LLW waste immediately,
THEN:

[A] **ENSURE** that the LLW container is stored/staged in the LLW Storage Area TA-50 WCRR South Yard Inventory [Rad Staging 3762/Rad Storage 5606] using approved industrial equipment.

[B] **PLACE** a Tamper Indicating Device (TID), (e.g., lock, wire tab, plastic tie) on the empty LLW container.

[C] **DOCUMENT** the LLW container number and the time and date the TID was placed on the LLW container on Attachment 5, LLW Temporary Tamper Indicating Device Logsheet.

[D] **AFFIX** an “EMPTY” tag to the LLW container if applicable.

[5] **IF** unpacking and replacing combustible waste into a new container to be certified for NNSS,
THEN GO to Section 7, Unpacking and Repackaging Combustible LLW Destined for NNSS.

6. PERFORMANCE— LLW PACKAGING PREPARATION AND STAGING AT WCRRF BUILDING TA-50-69

This section may be performed independently or in conjunction with other sections. Unless otherwise noted, the steps are to be performed in sequence.

This section is for container preparation and staging of empty LLW waste containers for use in processing and repackaging LLW at the WCRRF TA-50-0069. LLW waste container **SHALL** be set-up in accordance with approved Waste Stream Profiles from WCATS and/or guidance and direction from the WMC.

NOTE 1 *The listed of Waste Profiles below are currently approved in WCATS. Additional profiles may be used at WCRRF as long they are approved and setup in WCATS database.*

NOTE 2 *All manual drum movement will be performed in accordance with Appendix 1, Manual Drum Movements Special Instructions and EP-DIV-Policy-20057, EWMO Health and Safety Policy-Manual Movement. The following Waste Stream Profiles are currently approved for WCRRF:*

- *2726 – Kimwipes, Gloves, Rags, PPE, & Miscellaneous Room Trash from Size Reduction Facility*
- *22775 –Kimwipes, Gloves, Rags, PPE, and Miscellaneous Room trash from Size Reduction*

NOTE 3 *All LLW movements or daughter drums generated are tracked in WCATS.*

6.1 Combustible Waste Receptacle Setup, Collection, and Processing

WCRRF Waste Handling Technician

[1] **ENSURE** that the prerequisite actions have been completed.

[2] **ENSURE** an approved LLW container and that has been prepared in accordance with Section 5, LLW Empty Container Preparation.

[3] **OBTAIN** an approved cardboard box (12 in. x 12 in. x 24 in.) and liner as directed by a WMC.

[4] **ASSEMBLE** the cardboard box and **TAPE** the lower seam using approved tape (e.g. duct tape, vinyl).

[5] **PLACE** a plastic liner inside of the cardboard box.

6.1 Combustible Waste Receptacle Setup, Collection, and Processing (continued)

[6] **RELOCATE** the cardboard box inside the designated combustible waste receptacle in TA-50-69.

[7] **MONITOR** the combustible waste receptacle contents to ensure that all waste placed in the receptacle satisfies Waste Stream Profile (2726/22775) documentation.

[8] **IF** the waste in the combustible receptacle does **NOT** satisfy the waste stream profile (2726/22775),
THEN NOTIFY the WCRRF SOS and the WMC for the applicable actions.

[9] **IF** a WPC is available to certify the waste,
THEN GO to Section 6.2, LLW Packaging Destined to NNSS.

[10] **WHEN** the plastic liner is full,
THEN:

[A] **SECURE** the plastic liner using a pig-tail method or zip-ties.

[B] **CLOSE** and **SEAL** the cardboard box with approved tape (e.g. duct tape, vinyl).

[C] **WEIGH** the cardboard sealed box, and **RECORD** the weight (lbs) and the waste profile number on the top of the box using a marker. (e.g., indelible ink, grease pencil).

[D] **ENSURE** that a RCT performs a radiological survey of the cardboard box before removing from TA-50-69.

[E] **IF** radiological contamination is found on the cardboard box,
THEN FOLLOW the RCT's guidance and instructions.

[F] **RELOCATE** the boxed combustible waste to the Rad Staging 3762/Rad Storage 5606 area for placement into a LLW container setup for combustible profile (2726/22775).

6.1 Combustible Waste Receptacle Setup, Collection, and Processing (continued)

WARNING

Waste container box lids (LB-99, and ST-90) are awkward, may have sharp edges and weigh approximately 50 lbs. Handling of box lids are required to be performed while wearing cut-resistant gloves and using the buddy system. Failure to comply with these recommended practices may result in personal injury.

[G] **REMOVE** the temporary TID and lid assembly components from the LLW container.

[H] **DOCUMENT** the removal of the TID on Attachment 5.

[I] **REMOVE** the container lid and set off to the side.

[J] **PLACE** the box into the LLW container.

[K] **RECORD** a package number starting with 1 on outside of box using a marker.

[L] **GENERATE** an Attachment 4, LLW Container Inventory Data Logsheet and **RECORD** an entry for each cardboard box placed in the LLW container.

[M] **PLACE** the lid on the waste container.

[N] **SECURE** the waste container with a Tamper Indicating Device and **DOCUMENT** re-application of TID on Attachment 5.

Waste Handling Technician/WMC

[11] **REMOVE, OBLITERATE,** and/or **COVER** the EMPTY tag.

[12] **APPLY** a Non-Regulated Label with the waste description on the LLW container.

[13] **ENSURE** the RCT performs radiological surveys of container and labels the LLW container with appropriate radiological labels.

[14] **IF** contamination is found on the waste container,
THEN FOLLOW the RCT'S guidance and instructions.

6.2 LLW Packaging destined to NNNS

This section may be performed independently or in conjunction with other sections. Unless otherwise noted, the steps are to be performed in sequence.

This section is for packaging Waste Stream Profile 2726 and Waste Profile form 22775 Combustible Waste destined to Nevada National Security Site.

WCRRF Waste Handling Technician

[1] **WHEN** a plastic liner is full,
THEN ENSURE that a WPC is present for visual inspection and approval of the waste.

[2] **REMOVE** the plastic liner from the cardboard box for inspection by the WPC in TA-50-69.

[3] **IF** WPC rejects the waste,
THEN:

[A] **NOTIFY** the WCRRF Shift Operations Supervisor (SOS) and WMC**.**

[B] **REQUEST** applicable actions from the SOS and WPC.

[4] **ENSURE** that the waste is double bagged (additional liner) and **SECURE** the plastic liner using a pig-tail method or zip-ties.

[5] **ENSURE** the RCT performs a radiological survey of the full plastic liner before removing the waste from TA-50-69.

[6] **REPLACE** a new plastic liner in the combustible cardboard box in TA-50-69.

[7] **IF** contamination is discovered,
THEN FOLLOW the RCT'S guidance and instructions.

NOTE *Plastic bag with waste should be <u>not</u> be left unattended or placed on the ground. Waste should be taken to Rad Staging area and placed in the waste container and then secured.*

[8] **RELOCATE** the full plastic liner of LLW waste to the Rad Staging 3762/Rad Storage 5606 area to an approved container for Waste Stream Profile 2726 and Waste Profile form 22775 combustible waste destined for NNSS.

6.2 LLW Packaging destined to NNSS (continued)

WPC

[9] **REMOVE** the TID from the LLW container and **DOCUMENT** on Attachment 5.

Waste Handling Technician

[10] **REMOVE** LLW container lid assembly components and place off to the side in a safe configuration.

Waste Handling Technician

[11] **IF** placing the first plastic liner into LLW container,
THEN:

[A] **REMOVE, OBLITERATE,** and/or **COVER** the EMPTY tag.

[B] **APPLY** a Non-Regulated Label with the waste description on the LLW container.

[C] **ENSURE** the RCT performs a radiological survey of the LLW container and affixes labels (radiological label) to the LLW container.

[D] **IF** contamination is found on the waste container,
THEN FOLLOW the RCT'S guidance and instructions.

[12] **PLACE** the waste package into designated LLW waste container.

[13] **PLACE** the lid on the LLW container.

WPC

[14] **SECURE** the waste container with a TID and **DOCUMENT** on Attachment 5.

7. PERFORMANCE— UNPACKING AND REPACKAGING COMBUSTIBLE LLW DESTINED FOR NNSS

This section may be performed independently or in conjunction with other sections. Unless otherwise noted, the steps are to be performed in sequence.

This section provides the steps for processing LLW that was not previously certified by a WPC for NNSS at the time of generation and packaging. Pre-packaged LLW waste will be removed from its original container by the WCRRF waste handling technician, inspected by a NNSS Certifier and replaced into an approved LLW container set up for the applicable waste profiles:

- 2726 (Kimwipes, Gloves, Rags, PPE, Misc. Room trash from Size Reduction) facility)
- 22775 (Kimwipes, Gloves, Rags, PPE, and Misc Room Trash from Size Reduction facility)

WARNING

Drums can have sharp edges and may create pinch points when being handled. Personnel are required to use the appropriate drum handling equipment and PPE, such as cut resistance (e.g., leather) gloves, when handling drums.

NOTE *All manual drum movement will be performed in accordance with Appendix 1, Manual Drum Movements Special Instructions and EP-DIV-Policy-20057, EWMO Health and Safety Policy-Manual Movement.*

Waste Handling Technician

[1] **ENSURE** that all the prerequisite actions have been completed.

[2] **OBTAIN** an approved empty (receiving) LLW container in accordance with Section 5 of this procedure and **PLACE** the LLW container outside the TA-50-69 truck bay door or as directed by SOS using approved industrial equipment (e.g., forklift, rotogrip).

[3] **RELOCATE** the LLW (source) waste container from the Rad Staging 3762/Rad Storage 5606 area to outside of the TA-50-69 truck bay door or as directed by the SOS using approved industrial equipment (e.g., forklift, rotogrip).

7. PERFORMANCE— UNPACKING AND REPACKAGING COMBUSTIBLE LLW DESTINED FOR NNSS (continued)

[4] **REVIEW** the latest WCRRF Quarterly Combustible Loading Surveillance results for the current Combustible Loading Sub-Total value (pounds) for WCRRF TA-50-69 and **RECORD** the current Combustible Sub-total value (pounds) on Attachment 1.

[5] **SUBTRACT** the Additional Combustible Load limit value from the WCRRF Total Combustible load limit (1792.4 lbs) and **RECORD** the additional Combustible Load Limit allowed on Attachment 1.

NOTE *The administrative control of 10 percent (.9) is being deducted from the Additional Combustible Load Limit allowed for scale inaccuracies.*

[6] **MULTIPLY** the Additional Combustible Load Limit times .9 and **RECORD** the net Additional Combustible Load allowed at WCRRF on Attachment 1.

NOTE *The WCRRF SOS validation must be completed prior to processing waste.*

WCRRF SOS

[7] **VALIDATE** that the Additional allowed Combustible Load Limit is accurate, and **DOCUMENT** on Attachment 1.

[8] **IF** the additional Combustible Load Limit allowed is incorrect,
THEN RECONCILE and **CORRECT** on Attachment 1.

[9] **IF** a new LLW receiving waste container is being used,
THEN REMOVE the receiving container lid assembly, and **PLACE** in a safe location.

[10] **ENSURE** that the RCT performs radiological surveys of container.

[11] **IF** contamination is found on the waste container,
THEN FOLLOW the RCT'S guidance and instructions.

[12] **OPEN** the LLW source container being unpacked, and **PLACE** the lid in a safe configuration away from packaging area.

[13] **ENSURE** RCT performs survey on lid.

[14] **RECORD** the LLW Source and Receiving Container on Attachment 1.

7. PERFORMANCE— UNPACKING AND REPACKAGING COMBUSTIBLE LLW DESTINED FOR NNSS (continued)

[15] **RECORD** the Waste Stream ID/profile No. on Attachment 1.

WARNING

1. **Containers and container contents can have jagged or sharp edges and may create pinch points when being handled. Personnel are required to use the appropriate PPE, such as cut resistance (e.g., leather) gloves, when handling drums.**

2. **Proper lifting techniques and the buddy system are required to be employed when performing heavy lifting or movements in order to prevent personnel injuries.**

[16] **RECORD** a batch number starting with the number one (1) on Attachment 1.

[17] **REMOVE** the waste items from the LLW source container one at a time.

[18] **RECORD** a number starting with one (e.g., 1, 2, 3, 4) on each waste item with a marker (grease, indelible pen) and **RECORD** the number on Attachment 1.

[19] **RECORD** the weight (hand written on each box) on Attachment 1.

[20] **IF** the waste item (bag or box) does **NOT** possess a weight value on the waste item, **THEN:**

[A] **WEIGH** the waste item, and **RECORD** the individual weight on the outer package.

[B] **GO** to Step 7.[22].

[21] **REPEAT** Step 7. [17] and 7. [20] until the Additional Combustible Loading allowance Limit Step 7.[6] is achieved or as directed by WCRRF SOS, whichever is less.

NOTE *The waste handler will continue to make document waste batches on Attachment 1 until all waste has been processed. This activity ensures that at no time we exceed the additional combustible load limit identified on Attachment 1.*

[22] **ADD** all package weights for a Batch total and **RECORD** on Attachment 1.

7. PERFORMANCE— UNPACKING AND REPACKAGING COMBUSTIBLE LLW DESTINED FOR NNSS (continued)

Waste Handling Technician/WPC

[23] **TRANSPORT** one batch of waste items (e.g., boxes or bags) into Room 102 for review by the NNSS Waste Certifier.

[24] **ENSURE** that the RCT performs radiological surveys of the waste, prior to removing from box.

[25] **IF** radiological contamination is found on the waste container,
THEN FOLLOW the RCT'S guidance and instructions.

[26] **OPEN** each box one at a time and **REMOVE** the plastic bag.

[27] **DISASSEMBLY** and **COMPRESS** cardboard box, as applicable.

[28] **STAGE** the cardboard boxes into a plastic liner for processing at a later time.

[29] **POSITION** the plastic liner on the floor to allow for a visual inspection by the WPC.

[30] **IF** the LLW is rejected by the WPC,
THEN NOTIFY the SOS and the WMC for guidance and direction.

[31] **PACKAGE** the cardboard boxes in a plastic liner.

[32] **ENSURE** that the waste is double bagged (additional liner) and **SECURE** the plastic liner using a pig-tail method or zip-ties.

[33] **ENSURE** that a RCT conducts surveys of the waste items and provides approval to remove from Room 102.

[34] **IF** radiological contamination is found on the waste container,
THEN FOLLOW the RCT's guidance and instructions.

[35] **TRANSPORT** the plastic liners to the designated receiving container (outside the truck bay door) or as directed by SOS.

7. PERFORMANCE— UNPACKING AND REPACKAGING COMBUSTIBLE LLW DESTINED FOR NNSS (CONTINUED)

[36] **ENSURE** that the plastic liners items are placed into the LLW receiving container as efficiently and compactly as practical to minimize void space.

[37] **REPEAT** from Step 7. [16] through 7.[36] until all the waste being processed is removed from the source container.

NOTE *If a waste container is to be left unattended, TID placed by the WPC is required to prevent any additional items to be placed in the waste container.*

Waste Handling Technician

[38] **IF** a LLW receiving container must be left partially filled for any reason, or repackaging activity suspended,
THEN:

[A] **ENSURE** that the LLW source and receiving container lids are replaced and secured.

[B] **ENSURE** RCTs performed surveys of the containers.

[C] **RETURN** container to the Rad Staging 3762/Rad Storage 5606 area..

WPC

[D] **APPLY** TID.

Waste Handling Technician

[39] **IF** a LLW receiving container is still partially empty and no additional waste will be placed at this time,
THEN:

[A] **PLACE** the LLW lid back on the LLW receiving container.

WPC

[B] **PLACE** a TID on the LLW container.

[C] **MOVE** the LLW container into the Rad Staging 3762/Rad Storage 5606 area.

[D] **GO** to Section 9.1, Post-Performance Activity

7. PERFORMANCE— UNPACKING AND REPACKAGING COMBUSTIBLE LLW DESTINED FOR NNSS (continued)

[40] **PLACE** the LLW container lid back on the waste container.

[41] **CLOSE** the waste container in accordance with LANL Waste Acceptance Criteria, and guidance from the WPC, and **INITIAL** on Attachment 1.

[42] **DISPOSITION** empty container.

WPC

[43] **PLACE** a TID on the LLW container to secure.

Waste Handling Technician

[44] **WEIGH** the LLW container and **RECORD** the LLW container GROSS weight on Attachment 1.

[45] **MOVE** the LLW container into the Rad Staging 3762/Rad Storage 5606 area.

[46] **ENSURE** that the LLW waste container is labeled in accordance with WMC direction, and **DOCUMENT** on Attachment 1.

[47] **REQUEST** the Waste Generator Services (WGWGS) to perform a gamma spectroscopy scan on the LLW container, and **DOCUMENT** on Attachment 1.

[48] **WHEN** the gamma spectroscopy results are received,
THEN ATTACH the gamma spectroscopy results to Attachment 1.

[49] **IF** LLW container is going to be shipped to TA-54 Area G for further disposition,
THEN NOTIFY the WMC for guidance and direction.

[50] **IF** no additional waste processing is to be conducted,
THEN GO to Section 9, Post Performance Activity.

8. PERFORMANCE—RADIOACTIVE STAGING AREA INSPECTIONS

NOTE *Attachment 2, Radioactive Waste Staging Area Monthly Inspection Form (Example) provides an example of this form.*

Waste Handling Technician/WMC

[1] **PERFORM** a monthly inspection of all stored radioactive waste containers using ENV-RCRA-TOOL-303, Radioactive Waste Staging, and **DOCUMENT** the inspection results on the Attachment 2, Radioactive Waste Staging Area Monthly Inspection Form.

[2] **NOTIFY** the supervisor/WMC of any discrepancies are found during the inspections.

SOM/WMC

[3] **PERFORM** an evaluation using the nonconformance guidance (P330-6) to initiate an NCR if required, and rectify discrepancies, and **NOTIFY** the WMC the same day.

[4] **IF** other actions are required based on the observation during the inspection, **THEN RECORD** the action required, action taken, date, and time of action on the appropriate tool checklist.

Waste Handling Technician/WMC

[5] **PERFORM** a weekly inventory inspection of LLW storage areas in accordance with Attachment 3, LLW Weekly Inventory and Update Inventory Form and **FORWARD** copy of Attachment 3 to the WMC.

[6] **IF** discrepancies are identified between the staged containers and the database inventory, **THEN NOTIFY** supervision of the discrepancies and **ASSIST** in the verification that containers do <u>not</u> match the database.

[7] **NOTIFY** the SOM and/or Operations Manager (OM) of discrepancies that have been verified.

[8] **PERFORM** an evaluation using the nonconformance guidance (P330-6) to initiate an NCR, as required and disposition the discrepancies.

9. POST-PERFORMANCE ACTIVITY

9.1 Disposition

Waste Handling Technician

[1] **SIGN** and **DATE** on Attachment 1, LLW Container Inspection and Packaging Data Sheet.

Supervisor

[2] **REVIEW** Attachment 1 for accuracy and completeness.

[3] **IF** any deficiencies were identified,
THEN INITIATE actions to correct the deficiency [e.g., Facility Service Request (FSR) System], and **DOCUMENT** the actions taken (e.g., FSR Issue Number) in the Comments section of the applicable appendices.

[4] **SIGN** and **DATE** on Attachment 1.

OM or designee

[5] **REVIEW** Attachment 1 for accuracy and completeness.

[6] **SIGN** and **DATE** on Attachment 1.

NOTE *Completing a Post-Job Review may be accomplished using the applicable P300 form or online (the preferred method since the institution has access to feedback and lessons learned http://int.lanl.gov/safety/iwmc/ [Click on the Submit IWD Part 4 Post-Job Review.*

[7] **IF** any of the following occur:

- A new activity was completed for the first time
- A request was made by anyone involved with the performance of this procedure to perform a post-job review
- An abnormal event occurred
- A revision to an existing procedure was issued and it has been determined by the procedure owner or designee that a Post-Job Review is required

THEN PERFORM a Post-Job Review in accordance with P300.

[8] **IF** the Post-Job Review identified any necessary changes to this procedure,
THEN INITIATE a revision to this procedure.

9.2 Records Processing

Waste Handler or Supervision

[1] Ensure that documents generated by the performance of this procedure are processed as follows:

Record Identification	Record Type Determination	Protection/Storage Methods	Processing Instructions
Attachment 1, LLW Container Inspection and Packaging Data Sheet Attachment 2, Radioactive Waste Staging Area Monthly Inspection Form (Example) Attachment 3, LLW Weekly Inventory and Update Inventory Form Attachment 4, LLW Package Log Inventory Data Logsheet Attachment 5, LLW Temporary Tamper Indicating Device Logsheet.	QA Record	Supervision **SHALL** implement a reasonable level of protection to prevent loss and degradation. Records should be maintained in a one-hour fire rated metal file cabinet when not in use.	When the records are ready for final disposition, the record is transferred to Records Management in accordance with EP-DIR-AP-10003, Records Management Procedure For ADEP Employees.

10. REFERENCES

- DOE O 435.1, Radioactive Waste Management
- EP-DIR-AP-10003, Records Management Procedure for ADEP Employees
- EP-DIV-AP-0112, EWMO Pre-Job Briefings
- EP-DIV-DOP-20086, EWMO Division Specific Forklift and Drum Handler Equipment Operations
- EP-WCRR-FP-DOP-0304, WCRRF Quarterly Combustible Loading Surveillance
- EP-DIV-SO-20057, EWMO Health and Safety Policy-Manual Movement
- EP-WCRR-WO-DOP-1199, WCRRF and Building TA-50-69 Waste Container Receipt, Movement, and Transfer
- EP-WCRR-WO-DOP-0237, Performing Gamma Spectroscopy of Waste Container at WCRRF
- ENV-RCRA-TOOL-303, Radioactive Waste Storage
- P101-18, Procedure for Pause/Stop Work
- P121, Radiation Protection
- P300, Integrated Work Management
- P330-6, Nonconformance Reporting
- P930-1, LANL Waste Acceptance Criteria
- P409, Waste Management
- P101-4, LANL Forklifts and Powered Industrial Trucks
- Waste Compliance and Tracking System

APPENDIX 1

Page 1 of 1

MANUAL DRUM MOVEMENT SPECIAL INSTRUCTIONS

NOTE 1 *The following requirements below have been pre-approved in accordance with EP-DIV-Policy-20057, EWMO Health and Safety Policy.*

NOTE 2 *Any manual drum movement modifications or new scenario that may arise* ***SHALL*** *be performed in accordance with EP-DIV-POLICY-20057.*

Manual Drum Movements within Transportainers:

- Two-person rule and a drum dolly chock to slide drums to and from the drum dolly and spill pallets
- Two-person rule to slide drums from one pallet to another
- Two-person rule to slide drums on the floor

Manual Drum movements to and from Scale:

- Mechanical means only

Manual Drum Movements between the 50-69 RBA and the CA

- Mechanical means
- Empty POCs mechanical mean only
- Empty 55 and 85s from pallet to dolly or dolly to pallet using two-person rule with a dolly chock

Manual Drum Movements to center of Scale

- Utilize mechanical means (e.g., drum grabber or versa lift)
- Two-person rule to slide drum to and from the center of the scale

Manual Movement of Drums onto Lift Table under the WCG

- Utilize versa lift, (if available) otherwise implement two-person rule to slide drum to and from the drum dolly and lift table with metatarsal guards

Manual Movement of Drums in Transport Vehicle for Receipt Inspection and Unloading

- Two-person rule to slide drums

ATTACHMENT 1
Page 1 of 3

LLW CONTAINER INSPECTION AND PACKAGING DATA SHEET

Date: _____

4.1.[6] **($)** Building TA-50-69 is in OPERATIONS MODE. (TSR 1.2) ☐YES ☐NO

4.3.1.[2] Scale data:

- Verification Date: _____
- Scale ID No.: _____
- Manufacturer: _____
- Model: _____
- Calibration Due Date: _____

4.3.1.[3] Torque wrench:

- ID Number: _____
- Cal Due Date _____

5.1[1] Outer container inspection: ☐SAT ☐UNSAT

- No potential rust or corrosion, holes, breaches
- No splits, tears, in seams obvious holes, punctures, creases, broken welds
- No water damage, significant rust on outside of container top or bottom
- UN number visible
- DOT number visible

5.1[2] Inner container inspection:

- No potential rust or corrosion, holes, breaches ☐SAT ☐UNSAT
- No water damage, significant rust inside of container
- Lid assemble components satisfactory (ring, bolt, shims, lid gasket, latches)

5.2 [2] Waste container TARE weight _____ lb

ATTACHMENT 1
Page 2 of 3

(**$**) Combustible Load Limit for WCRRF Building 0069 **(**.60 x 2989 sq ft =1792.4 pounds)

7. [4] Current Combustible Loading Sub-Total Value _____lb

–

7. [5] Additional Combustible Load Limit _____ lb

x.9

7. [6] Net Additional Combustible Load allowed in WCRRF _____lb

7. [7] Net Additional Combustible Loading is accurate per Quarterly Combustible Loading surveillance

_____
(SOS initials)

7. [14] Source Container No.: _____

7. [14] Receiving Container No.: _____

7. [15] Waste Stream ID No.: _____

Batch # 7.[16]	Box Number 7 [18]	Package weight (7.[19])	
		7 [22]Batch Total Weight	
		7 [22]Batch Total Weight	
		7 [22]Batch Total Weight	
		7 [22]Batch Total Weight	

ATTACHMENT 1
Page 3 of 3

7. [41] LLW container closed per LANL WAC. _____ (Initials)

7. [44] LLW container GROSS weight. _____

7 .[46] Labeled _____ (Initials)

7. [47] Gamma spectroscopy request _____ Date and Time

Comments: _____

_____

_____

9.1.[1] Performed By: _____ / _____ / _____ / _____
Waste Handler (Print) Signature Z # Date

9.1.[4] Reviewed By: _____ / _____ / _____ / _____
Supervisor (Print) Signature Z # Date

9.1.[6] Reviewed By: _____ / _____ / _____ / _____
SOM/Designee (Print) Signature Z # Date

ATTACHMENT 2

Page 1 of 1

RADIOACTIVE WASTE STAGING AREA MONTHLY INSPECTION FORM

RADIOACTIVE WASTE STAGING AREA MONTHLY INSPECTION FORM

Facility: Site ID #:	Radioactive Waste Area: Site Owner:	FOD: Cert Official:	Inspect Date:

☐No use ☐No concerns ☐With concerns ☐Inactive/Removed ☐Active but not storing ☐Comments

ITEM/Process/Person {DOE M 435.1-1 Cite}	*Specific Question*	*Acceptable/Not Acceptable*		
Radioactive Waste Management Basis {III & IV D(3)}	Is the facility RWMB report accurate with respect to the radioactive waste management facilities and activities observed?	☐ Yes	☐ No	☐ NA
	Are all radioactive waste staging and storage areas registered or notification of location change has been made?	☐ Yes	☐ No	☐ NA
	Are all radioactive waste staging and storage areas posted with site ID #?	☐ Yes	☐ No	☐ NA
Waste Acceptance {III & IV.G}	Does the facility system ensure that wastes certified for transfer into storage meet the identified TSD WAC?	☐ Yes	☐ No	☐ NA
Waste Characterization {III & IV.I}	Are the waste characterization methods adequate (Waste Characterization Tool) and adequately documented?	☐ Yes	☐ No	☐ NA
Rad Management {III & IV.I}	Does the overall radioactive waste management system function to maintain waste certification?	☐ Yes	☐ No	☐ NA
Waste Certifying Official {III & IV.J.(1)}	Do records indicate the WCO certifies waste for storage and shipment?	☐ Yes	☐ No	☐ NA
Waste Management Documentation {III & IV.J.(1)}	Is waste management documentation readily available for WCP assessment? Does the documentation include: Waste Profile Forms (waste generation), Waste Characterization (Current Analytical Data and/or AK), Approved Chemical Waste Disposal Requests (storage certification), Shipment Manifests (shipment certification)	☐ Yes	☐ No	☐ NA
LLW Staging {IV.N.(7)}	Do labels and documentation indicate containers are staged no longer than 90 days?	☐ Yes	☐ No	☐ NA
	Is the accumulation process adequately controlled to prevent modification of container contents?	☐ Yes	☐ No	☐ NA
Preparation for {III & IV.I} Certification for Storage	Does the waste certification process ensure waste characterization information for each container is consistent with the contents?	☐ Yes	☐ No	☐ NA
Preparation for {III & IV.J.(3)} Storage	Is waste managed so as to prevent the reasonably foreseeable loss of certification? Prevention from: damage to the container or lack of contingent storage for liquid waste, damage to the container label or markings.	☐ Yes	☐ No	☐ NA
	Is the location adequate to avoid the above problems protecting the integrity of waste and minimizing worker exposure according to RP-1 requirements?	☐ Yes	☐ No	☐ NA
Waste [Responsibility] Transfer {II & IV.K}	Is the responsibility for radioactive waste containers and their certification clearly established, maintained, properly transferred, and adequately documented?	☐ Yes	☐ No	☐ NA
Packaging and Transport {III & V.L}	Is the packaging and transport process implemented so as to maintain waste certification?	☐ Yes	☐ No	☐ NA

Date:	**Inspector Name(s) (Print)**	*Signature(s)*

WES/WA 11/2007

EXAMPLE

ATTACHMENT 3
Page 1 of 1

LLW WEEKLY INVENTORY AND UPDATE INVENTORY FORM

TA-50 WCRR		South Yard Inventory			[Rad Stag 3762 / Rad Stor 5606]		
Waste Type	Waste Id #	Seal Date	¥ Spect Date	Cntr Type	Gross Weight [Kg or Lb]	General Description	Status / Action: Week of

TA-50		South Yard Inventory			[Non-Regulated Waste]		
Waste Type	Waste Id #	Seal Date	¥ Spect Date	Cntr Type	Gross Weight [Kg or Lb]	General Description	Status / Action

ATTACHMENT 4
Page 1 of 1

LLW CONTAINER INVENTORY DATA LOGSHEET

	TA-50 WCRR		South Yard Inventory	[Rad Stag 3762 / Rad Stor 5606]
Container #	Waste Type Profile #	Date Waste placed in (MM/DD/YY)	Package Weight [Kg or Lb]	General Description

ATTACHMENT 5
Page 1 of 1

LLW TEMPORARY TAMPER INDICATING DEVICE LOGSHEET

Container ID Number (container) 5.2[4][C]	TID (Lock #) 5.2[4][C]	Start Date Initial TID(s) Applied 5.2[4][C]	Date TID(s) Removed 6.1[10[H] 6.2 [9]	Date TID(s) Reapplied 6.1[10][N] 6.2 [14]	Waste Handler Name (Print)	Z #	Waste Handler Signature Date/Time

EP-WCRR-WO-DOP-1196, WCG Horizontal Port Waste Removal

LAUR-14-24885

WCG Horizontal Port Waste Removal

Effective Date: 3/19/2014

Hazard Class:	☐ Low	☒ Moderate	☐ High/Complex
Usage Mode:	☐ Reference	☐ UET	☒ Both UET and Reference

The Responsible Manager has determined that the following organizations' review/concurrence is required for the initial document, and for major revisions a same type and level review is required. Review documentation is contained in the Document History File:

Engineering
Quality Assurance
Radiation Protection
Industrial Hygiene and Safety
Subject-Matter Expert
Shift Operations Manager

Responsible Manager, LTP-DDP Operations Manager

Name (print)	Z#	Signature	Date
Lou Jalbert	121997	/s/ Lou Jalbert	3/18/14

Classification Review: ☐ N/A ☒ Unclassified ☐ UCNI ☐ Classified _____

Name (print)	Z#	Signature	Date
Art Crawford	080070	/s/ Art Crawford	3/18/14

Working Copy / Information Only (circle one)
Initials / Date: _____/_____

This document fully satisfies the requirements of P300, Integrated Work Management, in order to systematically describe the work activity, the associated hazards, and the controls that **MUST** be employed to mitigate the risks.

HISTORY OF REVISIONS

Document Number	Issue Date	Action	Description
EP-WCRR-WO-DOP-0241, R.0	October 30, 2008	New document	
EP-WCRR-WO-DOP-0241, R.1	October 28, 2010	Major Revision	Title change. This revision is to incorporate requirements from page change 1.2 for WCCR building 50-69 in reference to Fire blanket, TSR reference number updates, template updates. No hazards were introduced during this revision.
EP-WCRR-WO-DOP-1196, R.0	March 19, 2014	Major Revision	Assigned new document number. Revised procedure for P101-25 implementation. Added new Precautions and Limitations regarding critical lifts. Added new step 4.2[6] and Appendix 1 to use if a pre-engineered production critical lift is required. Modified bag-on steps to align with WCG Operations procedure EP-WCRR-WO-DOP-1198. Made editorial changes and updated reference documents. No new hazards were introduced in this revision.

TABLE OF CONTENTS

Section Page

TITLE PAGE 1
REVISION HISTORY 2
TABLE OF CONTENTS 3

1. PURPOSE 4

2. SCOPE 4

3. PRECAUTIONS AND LIMITATIONS 4
3.1 General 4
3.2 Safety Basis Requirements 10

4. PREREQUISITE ACTIONS 12
4.1 Planning and Coordination 12
4.2 Field Preparation 13

5. WCG HORIZANTAL PORT WASTE REMOVAL 15

6. POST-PERFORMANCE ACTIVITY 22
6.1 Disposition 22
6.2 Records Processing 23

7. REFERENCES 23

Appendixes
Appendix 1, WCG Drum Lift Pre-Engineered Production Critical Lift Plan (P101-25 Attachment B) 25

Attachments
Attachment 1, WCRRF WCG Horizontal Port Waste Removal Inspection Data Sheet 34

1. PURPOSE

This procedure provides instructions for removing waste from the horizontal port of the Waste Characterization Glovebox (WCG) located in Building TA-50-69 at the Waste Characterization, Reduction, and Repackaging Facility (WCRRF).

2. SCOPE

This procedure provides instructions for the disposition of waste such as heavy items within the WCG that cannot be processed through the two WCG bottom ports.

This procedure applies to personnel who perform WCG operations at WCRRF as directed by LANL TRU Waste Program (LTP) management.

The preferred method of removing waste from the WCG is through the bottom ports of the WCG. This procedure is performed in special situations where the WCG bottom ports cannot be used, e.g., for heavy items, and requires the documented approval of the LTP – Drum Disposition Project (DDP) Operations Manager.

3. PRECAUTIONS AND LIMITATIONS

3.1 General

- Activities, items, and containers **SHALL** satisfy approved design specifications, regulatory requirements, process-specific parameters, and procedural requirements. Activities, items, or containers that do not conform to the approved specifications and requirements are considered nonconforming and Nonconformance Reports (NCRs) **SHALL** be generated in accordance with P330-6, Nonconformance Reporting, as required.

- When a worker observes an unsafe condition or act that may pose an imminent danger or other safety concern/hazard, the worker has the authority and responsibility to inform the worker engaged in the work and request that the work activity be paused and/or stopped based on the risk posed to the individual, the employees, the environment, or the facility in accordance with P101-18, Procedure for Pause/Stop Work.

- Not Applicable (N/A) is documented on the attachment during the performance of this procedure indicating information that is not required to be recorded.

3.1 General (continued)

- During the processing of waste in the WCG, the following rules regarding dose rates from waste material shall be followed:

  — If the dose rate ≤190 mrem/hr, then remediate the waste in accordance with the proper process activity.

  — If the dose rate is >190 mrem/hr, then perform pipe overpack operations in accordance with EP-WCRR-WO-DOP-1198, WCRRF Waste Characterization Glovebox Operations.

- Due to the unique characteristics of Pu-238, diligent glove surveys **SHALL** be performed before and after handling Pu-238, as well as periodic glovebox wipe downs.

- All operators involved in the execution of this procedure must be qualified as Waste Handling Technicians.

- The Shift Operations Supervisor (SOS) or Shift Operations Manager (SOM) checks Acceptable Knowledge (AK) before processing any drums to ensure tritium-, asbestos-, and beryllium-contaminated drums are not received and processed.

- Use caution when performing glovebox operations. Operations may involve handling of sharp objects, applying force to objects with tools, and lifting heavy materials or items.
  — Glovebox gloves shall have cut resistant gloves (e.g., leather or Kevlar) over them during glovebox operations at all times unless performing activities which require extra dexterity.
  — Use the two-man rule when lifting heavy materials or items.
  — Cut or apply force away from hands and arms.
  — Use approved tools and techniques.
  — Tools shall be in good working order.

- Use good radiological practices when performing WCG operations. Workers should frequently self-monitor and use As Low As Reasonably Achievable (ALARA) principles of time, distance, and shielding to minimize exposure when working with radiological materials.

- Liquids removed from a parent drum must be remediated (absorbed) prior to being placed in the daughter drum.

3.1 General (continued)

- Personal protective equipment (PPE) (e.g., safety shoes, cut resistance gloves, and respirator) **SHALL** be worn as required by the radiological work permit (RWP) and Industrial Hygiene and Safety personnel. Any additional PPE required by the RWP or Radiological Control Technician (RCT) **SHALL** be worn during decontamination operations.

- This procedure **SHALL** not be used as a substitute for requiring the review of waste generator data for processing (e.g., detailed waste generator forms, real-time radiography records) as required in EP-WCRR-WO-DOP-1198. Review of such available waste generator data **SHALL** be considered in determining whether a drum could be processed safely.

- During execution of this procedure the glovebox will always contain 3 liters of carbon spheroids or MET-L-X.

- During processing of shielded containers, be aware of and avoid higher dose rate areas created when shielded containers are opened.

- This procedure **SHALL** <u>not</u> be used to prepare DEGRADED/LOSS OF INTEGRITY drums. DEGRADED/LOSS OF INTEGRITY drums are prepared in accordance with EP-WCRR-WO-DOP-1197, WCRRF Loading/Unloading SWB or 85-Gal Drum.

- This procedure is to be performed only by qualified Glovebox Operators.

- The approximate weight of load should be known before moving and the appropriate capacity lift selected. Be aware of uneven loading and shifts in the load when moving.

- Drums can have sharp edges and create pinch points when being moved – use appropriate gloves when handling drums.

- Use proper lifting techniques and buddy system and wear steel toed shoes when performing heavy lifting or movements.

- Charging of portable electric equipment in the WCG may <u>not</u> be performed when there is INVENTORY in the WCG.

3.1 General (continued)

- Notify the WCRRF Operations Center and supervision if an item is encountered that is too large or heavy to handle when processing waste.

- Unvented, sealed waste packages are those waste packages that have a positive locking mechanism, such as a gasket with locking ring, or a screw top lid (with no other openings) to seal the lid to the waste package.

- Personnel **SHALL** be aware of heat and cold stress indicators and observe co-workers in accordance with the Thermal Stress Awareness Course.

- Sharp objects **SHALL** be covered and properly stored when not in use. Wear cut/puncture resistant glove (e.g., leather) and cut away from your body when in use.

- All sharp objects that are introduced inside the glovebox **SHALL** be properly identified and stored when not in use in accordance with EP-DIV-AP-20047, LTP Glovebox/Glovebag and Glove Safety Program.

- Routine inspection of glovebox gloves **SHALL** be conducted in accordance with EP-DIV-AP-20047 and this procedure.

- To prevent personnel injury due to ergonomic, pinch point, and other general hazards, personnel **SHALL** maintain an awareness of the working environment and task activities and use good work practices and techniques, skill of craft, good ergonomic practices, and minimize time in awkward/uncomfortable positions.

- Spark-producing and non-sparking tools **SHALL** be distinguished from each other. Spark-producing tools may be set aside in the WCG, and not handled, when non-sparking tools are required.

- A cordless drill may be used to open a parent drum. This will minimize overextending glovebox gloves and potential damage (i.e., tearing a glove) when using a ratchet. The cordless drill is considered to be a spark-producing tool and is to be placed aside in the WCG, and not handled, when non-sparking tools are required.

3.1 General (continued)

- Charging of battery operated equipment external to the WCG may not be charged within the WCG exclusion zone.

- If receptacle inside the WCG or in the WCG exclusion zone is used, the equipment being plugged in must be in the OFF position before inserting or removing the plug at the receptacle.

- Prohibited items are documented by two distinct processes. One is through the use of the fast scan process, indicated by the GREEN hold tag. The second is through the use of CCP's NCR, indicated by a RED hold tag.

- Waste placed into daughter drums or Pipe Overpack Containers (POCs) must be from a single parent drum.

- Based on waste acceptance criteria, Class 1 oxidizers such as nitrates, and reactive flammables such as lithium metal or hydrides are prohibited items in the WCRRF.

- Liquids removed from a parent drum must be remediated (absorbed) inside of a new daughter drum.

- Storage of drum lid restraints when not in use **SHALL** be such that the drum lid restraints are protected from degradation (e.g., daughter drum).

- Avoid slips, trips, and falls by wearing the proper footwear with slip-resistant soles and using handrails when using stairs. Use established pathways when available and avoid walking on uneven or unstable surfaces.

- Glass sample vials may contain residual granular plutonium hydride which can generate sparks when subjected to mechanical agitation. To reduce the possibility of breaking a glass sample vial and the generation of sparks, glass sample vials **SHALL** be handled with care and void volume reduction activities **SHALL** be performed without excessive force. (EP-DIV-REPORT-09)

3.1 General (continued)

- The fire protection system sprinkler head located in the WCG is a water source that if activated (inadvertently or as a result of an actual WCG fire) would result in the spread of radiological contamination. Contact with the sprinkler head during waste processing is to be avoided in order to reduce the possibility of the inadvertent initiation of water flow into the WCG.

- All critical lift plans executed by Los Alamos National Laboratory (LANL) personnel **SHALL** be developed using Attachment B, LANL Critical Lift Plan, of P101-25, Cranes, Hoists, Lifting Devices, and Rigging Equipment.

- Support Services Subcontractors executing this procedure **SHALL** comply with the safety and health requirements documented in contractual agreements with the LANL.

- The instructions in this procedure satisfy the P101-25 ordinary lift requirements and the use of LANL Form 1611, Ordinary Lift Procedure, is <u>not</u> required. Not all of the items listed on Form 1611 are captured in this procedure because this procedure is performed using the drum lift and forklifts in preapproved locations and lifts standard waste containers of a known size and volume.

- Forklift operations are governed by the LANL procedure P101-4, Forklift and Powered Industrial Trucks. P101-4 requires the completion of the applicable sections of a LANL procedure P101-25 Attachment B for critical lifts involving a forklift or powered industrial truck. Forklift operations <u>not</u> involving a critical lift (e.g., load suspended below the forks of the forklift) are <u>not</u> required to comply with the requirements of P101-25.

- Monthly inspections of the drum lift expire at 23:59:59 on the last day of the calendar month. (P101-25)

3.2 Safety Basis Requirements

- This procedure contains special procedure step markings. **($)** is used to identify steps that implement WCRRF Safety Basis requirements. Steps containing **($)** may not be changed without Engineering approval to ensure the safety envelope is maintained.

- **($)** No combustibles shall be stored within the WCG exclusion zone, excluding drum liners or wrapping around DEGRADED/LOSS OF INTEGRITY drums that are inside Building TA-50-69 being loaded and working amounts of materials necessary to complete bag on/off operations such as tape, cheesecloth, or extra operator gloves. (LCO 3.4.3)

- **($)** The facility must be in the Operation Mode to process waste in the WCG. (TSR 1.2)

- **($)** Drums **SHALL** be verified to weigh less than 630 lb before lifting the drums using the WCG drum lift. (SR 4.5.1) Administratively, drum weights **SHALL** be limited to 624 lb in order to take into consideration the uncertainties of the instrumentation.

- **($)** Portable high-efficiency particulate air (HEPA) filter ventilation equipment **SHALL** be removed from the WCG Exclusion Area after operations are complete. (LCO 3.4.3)

- **($)** Drums **SHALL** <u>not</u> be lifted greater than 4 ft during any operation involved in preparing the drum. (SAC 5.10.2.2)

- **($)** When breaching (opening) unvented, sealed waste packages in the WCG the following requirements **SHALL** be satisfied:
  - Non-sparking tools and processes **SHALL** be used, [SAC 5.10.1.6(1)]
  - Electrical receptacles within the WCG **SHALL** be de-energized before opening the waste package and remain de-energized for a minimum of 30 minutes after removing the lid and lid restraining device.
    [SAC 5.10.1.6(2) and SAC 5.10.1.6(3)]

3.2 Safety Basis Requirements (continued)

- **($)** Before breaching (opening) an unvented, sealed 5- to 30-gal waste packages in the WCG a lid restraining device **SHALL** be inspected for degradation and properly installed [SAC 5.10.1.5(1)], and WCG operations **SHALL** be ceased for a minimum of 30 minutes following the removal of the waste package lid and lid restraining device (breaching). [SAC 5.10.1.5(2)]

- **($)** When breaching (opening) an unvented-sealed METAL 5- to 30-gal waste package in the WCG, both the 55-gal drum and the waste package **SHALL** be grounded before breaching (opening) the waste package and for 30 minutes after the removal of the lid and lid restraining device. (LCO 3.6)

4. PREREQUISITE ACTIONS

NOTE *The listed prerequisite actions may be completed in any order.*

4.1 Planning and Coordination

Supervisor or Designee

[1] **ENSURE** that written approval to perform this procedure has been obtained from the LTP-DDP Operations Manager and is documented on Attachment 1, WCRRF WCG Horizontal Port Waste Removal Inspection Data Sheet.

[2] **ENSURE** that the performance of this procedure has been scheduled on the WCRRF schedule.

[3] **ENSURE** that an RWP for the planned activity has been issued.

[4] **ENSURE** that a pre-evolution briefing is conducted and documented for all personnel involved in the performance of this procedure, in accordance with EP-DIV-AP-0112, EWMO Pre-Job Briefings.

[5] **ENSURE** that, as a minimum, the following personnel trained to the use of this procedure are available for the performance of this procedure, as required:
- Two Radiological Control Technicians (RCTs)
- Four qualified Waste Handling Technicians

[6] **RECORD** the date on Attachment 1.

[7] **($) ENSURE** that TA-50-69 is in the Operation Mode in accordance with EP-WCRR-FO-DOP-0201, WCRRF and Building TA-50-69 TSR Mode Change, and **DOCUMENT** on Attachment 1, WCRR WCG Horizontal Port Waste Removal Inspection Data Sheet. (TSR 1.2)

[8] **ENSURE** that the procedure is the latest revision, and **IDENTIFY** this document as Working Copy or Information Only on the Title Page.

4.2 Field Preparation

NOTE 1 *The sled should be created such that it has a lip (e.g., a portion of a 90 mil drum liner bottom left attached to the cradle) in order to provide a means for the material on the sled to remain on the sled as the material is pushed into the daughter drum.*

NOTE 2 *All WCG waste will be processed in accordance with EP-WCRR-WO-DOP-1198.*

Waste Handler

[1] **IF** a protective sleeve is to be placed in the daughter drum,
THEN PLACE a cradle to be used as a protective sleeve (sled) in the daughter drum.

[2] **RECORD** the Parent Drum Number and Parent Drum Weight on Attachment 1.

NOTE *The protective sleeve (sled) is placed into the daughter drum during the preparation of the daughter drum.*

[3] **ENSURE** that a daughter drum has been prepared in accordance with EP-WCRR-WO-DOP-0221, WCRRF 55-Gallon Daughter Drum Assembly Preparation and Closure.

[4] **RECORD** the Daughter Drum Number on Attachment 1.

[5] **($) DETERMINE** whether the Estimated Horizontal Port Daughter Drum Weight is less than 624 lbs, and **CHECK** (√) SAT or UNSAT on Attachment 1. (SR 4.5.1)

4.2 Field Preparation (continued)

NOTE 1 *A critical lift plan is required in accordance with P101-25, Cranes, Hoists, Lifting Devices, and Rigging Equipment, when the weight of the drum is greater than 75% of the WCG drum lift rated capacity (624 lb x 0.75 = 468 lb).*

NOTE 2 *The critical lift required to lower a daughter drum weighing greater than 468 lb from the horizontal port using the drum lift is designated a pre-engineered production lift and complies with the requirements of P101-25.*

NOTE 3 *The critical lift plan in Appendix 1, WCG Drum Lift Pre-Engineered Production Critical Lift Plan, is required for drums weighing more than 468 lb and implements P101-25 Attachment B.*

[6] **IF** the Estimated Horizontal Port Daughter Drum Weight is greater than 468 lb but less than or equal to 624 lb,
THEN PERFORM the following for the required critical lift:

[A] **DOCUMENT** on Attachment 1 that a critical lift plan is required by checking (√) Yes.

[A] **PRINT** a copy of Appendix 1, WCG Drum Lift Pre-Engineered Production Critical Lift Plan.

[B] **ENSURE** that the following additional information in Appendix 1 is completed:
- First section information (e.g., preparer, date prepared, date of lift, PIC name)
- Section B, Pre-lift Checklist
- Section K, Personnel Assignments
- Section M, Pre-lift Meeting

[7] **IF** the Estimated Horizontal Port Daughter Drum Weight is greater than or equal to 624 lbs,
THEN:

[A] **SUSPEND** operations.

[B] **NOTIFY** the WCRRF Operations Center and supervision of the discrepancy.

[C] **FOLLOW** the directions and guidance of the WCRRF Operations Center and the SOM/SOS.

[8] **ENSURE** that all Prerequisite Actions are complete, and **CHECK** (√) SAT or UNSAT on Attachment 1.

5. WCG HORIZANTAL PORT WASTE REMOVAL

Waste Handler

[1] **REQUEST** an RCT perform radiological surveys, as necessary during waste container handling evolutions.

[2] **IF** radiological contamination is detected during a radiological survey,
THEN FOLLOW the RCT's instructions.

NOTE *Respiratory protection is to be used as directed by RCTs.*

[3] **DON** respiratory protection as required by the applicable RWP.

[4] **IF** a parent drum is attached to the WCG horizontal port,
THEN bag-off the parent drum in accordance with EP-WCRR-WO-DOP-1198.

NOTE *The following steps provide instructions for loading a daughter drum onto the WCG horizontal port.*

[5] **OBTAIN** the key from the key box, and **INSERT** and **TURN** the key ON in order to establish power to the drum lift, as applicable.

WARNING

The drum lift pendant operator SHALL announce operation of the lift prior to commencing raising/lowering of the drum and all personnel SHALL stand clear and to the side of the drum movement to prevent pinching or crushing hazards.

[6] **IF** the drum port cover is present,
THEN REMOVE the drum port cover, and **SET** the cover aside.

[7] **LOWER** the drum lift to the lower limit switch or until the bellyband of the lift cradle can grasp the drum evenly using the drum lift control pendant.

[8] **CLOSE** and **SECURE** the bellyband ensuring that the bag-off sleeve does <u>not</u> get caught on the bellyband.

5. WCG Horizontal Port Waste Removal (continued)

[9] **RAISE** the drum to the horizontal port and stop, leaving an adequate gap (approximately 12 inches) to mount the bag-off sleeve to the horizontal port.

NOTE *Local air mover is to be used as directed by RCTs.*

[10] **SET UP** and **START** a portable HEPA-filter exhaust system to increase the local airflow at the site of the horsetail during the cutting operation.

[11] **INSPECT** the bag-off stub from previous drum/bagport/gloveport under retaining band for tears.

[12] **REMOVE** the drum port retaining band.

[13] **IF** damage to the bag-off stub is discovered,
THEN SEAL the area with vinyl tape.

[14] **SLIDE** the bag-off stub down to the outer ring of the port.

[15] **SWIPE** around the port with a Masslin smear and **HAVE** the RCT monitor the swipe.

[16] **IF** contamination is detected,
THEN DECONTAMINATE the port ring as directed by the RCT.

[17] **SLIDE** the new bag over the old bag stub.

[18] **ADHERE** vinyl tape to new bag where retaining band buckle is to be placed.

[19] **SECURE** the new bag with the drum port retaining band.

[20] **REMOVE** the old stub and drop into the glovebox.

5. WCG Horizontal Port Waste Removal (continued)

WARNING

The drum lift pendant operator SHALL announce operation of the lift prior to commencing raising/lowering of the drum and all personnel SHALL stand clear and to the side of the drum movement to prevent pinching or crushing hazards.

[21] **ALTERNATE RAISING** the drum and **DIRECTING** the bag-off sleeve to prevent damage to the sleeve until the drum is raised to the upper limit switch or until adequate insertion is achieved.

[22] **IF** a protective sleeve (sled) was placed in the horizontal port daughter drum to assist with removing the waste in the WCG,
THEN:

[A] **POSITION** the protective sleeve as necessary.

NOTE 1 *Equipment such as wood cribbing and pry bars may be used to position the waste at the horizontal port daughter drum.*

NOTE 2 *The orientation of waste placed into the daughter drum should be considered when placing the waste into the drum such as placing open drums face down into the drum, as determined by supervision.*

[B] **POSITION** the waste as necessary on the protective sleeve.

5. WCG Horizontal Port Waste Removal (continued)

WARNING

A method of chocking heavy round/cylindrical objects SHALL be available during their movement in order to prevent pinching or crushing hazards to personnel and the WCG if allowed to roll freely within the WCG.

[23] **IF** items are to be placed into the horizontal port daughter drum that were not in the original parent drum,
THEN:

[A] **DETERMINE** or **ESTIMATE** the weight (e.g., weigh) of each additional item to be placed into the horizontal port daughter drum that were not in the parent drum, and **RECORD** the Total Additional Weight on Attachment 1.

[B] **ADD** the Estimated Horizontal Port Daughter Drum Weight and Total Additional Weight, and **RECORD** the final horizontal port daughter drum weight on Attachment 1.

[C] **($) DETERMINE** whether the final horizontal port daughter drum weight will be less than 624 lbs, and **CHECK** (√) SAT or UNSAT on Attachment 1. (SR 4.5.1)

[D] **IF** the final horizontal port daughter drum weight is greater than or equal to 624 lbs,
THEN STOP and **NOTIFY** the WCRRF Operations Center and supervision of the discrepancy.

NOTE *The heaviest items are to be loaded towards the bottom of the drum in order to prevent an item from shifting and forcibly hitting the drum bottom or side.*

[24] **LOAD** the waste into the horizontal port daughter drum with the heaviest items loaded at the bottom of the drum.

NOTE *The following steps provide instructions for unloading a daughter drum from the WCG horizontal port.*

[25] **ENSURE** that the glovebox has been wiped down.

5. WCG Horizontal Port Waste Processing (continued)

NOTE *Respiratory protection is to be used as directed by RCTs.*

[26] **ENSURE** that respiratory protection has been donned as required by the applicable RWP.

[27] **SET UP** and **START** a portable HEPA-filter exhaust system to increase the local airflow at the site of the horsetail during the cutting operation as directed by the RCTs.

WARNING

The drum lift pendant operator SHALL announce operation of the lift prior to commencing raising/lowering of the drum and all personnel SHALL stand clear and to the side of the drum movement to prevent pinching or crushing hazards.

[28] **BACKOFF** the drum from the WCG horizontal port enough to create a horsetail.

[29] **INSPECT** the bag for damage.

[30] **IF** the bag is damaged,
THEN REPAIR the bag with vinyl tape with the assistance of an RCT.

[31] **MIST** the bag with spray cleaner, and **RUB TOGETHER** to ensure complete coverage in order to control contamination.

[32] **SQUEEZE** as much air as possible out of the bag.

[33] **GATHER** the bag and **COMPRESS** the bag to create a horsetail approximately 6 to 8 inches long.

[34] **TIGHTLY SECURE** the horsetail with 1 layer of filament and 2 layers of vinyl tape.

[35] **FIRMLY ATTACH** two binding ties near the center of the horsetail, approximately 2 inches apart.

[36] **COVER** the attached binding ties with vinyl tape.

5. WCG Horizontal Port Waste Removal (continued)

Waste Handling Technician Three

[37] **POSITION** the horsetail cutters between the binding ties of the horsetail.

Waste Handling Technician One

[38] **GRASP** the top of the horsetail.

Waste Handling Technician Two

[39] **GRASP** the bottom of the horsetail.

WARNING

Extremities SHALL <u>not</u> be placed inside the jaws of the cutting tool in order to prevent personnel injury due to pinching.

Waste Handling Technician Three

[40] **CUT** horsetail between binding ties.

Waste Handling Technicians Two and Three

[41] **SIMULTANEOUSLY COVER** the cut stubs of the bag-off bag with vinyl tape.

[42] **ENSURE** that the cut-stubs have been covered with a final layer of vinyl tape, as directed by an RCT.

NOTE 1 *Used cheesecloth shall be disposed of in the compactable waste container or in a daughter drum as waste is added in process.*

NOTE 2 *The following step may be performed out of sequence.*

Waste Handling Technician Three

[43] **WIPE** down the cutters, **PLACE** them in a plastic bag, and **PLACE** the plastic bag in staging area.

[44] **DECONTAMINATE** as necessary in accordance with RCT instructions.

[45] **ENSURE** that the drum lid and bolt ring have been installed onto the drum so that the drum lid is fully seated and the ring cannot slide around the drum lid.

[46] **POSITION** a drum dolly to receive the drum.

5. WCG HORIZONTAL PORT WASTE REMOVAL (continued)

WARNING

The drum lift pendant operator SHALL announce operation of the lift prior to commencing raising/lowering of the drum and all personnel SHALL stand clear and to the side of the drum movement to prevent pinching or crushing hazards.

[47] **MOVE** the drum down onto the drum dolly.

[48] **OPEN** the bellyband, and **UNLOAD** the drum from the drum lift.

[49] **FOLLOW** the RCT instructions for a full-body frisk.

[50] **CLOSE** the daughter drum in accordance with EP-WCRR-WO-DOP-0221.

[51] **IF** no additional drums are to be loaded with the WCG Drum Lift, **THEN PERFORM** the following:

[A] **INSTALL** the drum port cover.

[B] **RAISE** the drum lift to the desired height for stowing.

[C] **TURN OFF** the power to the drum lift, and **REMOVE** and **PLACE** the key in the key box.

6. POST-PERFORMANCE ACTIVITY

6.1 Disposition

Waste Handling Technician

[1] **SIGN** and **DATE** Attachment 1.

[2] **FORWARD** Attachment 1 to Supervisor for review.

Supervisor

[3] **REVIEW** Attachment 1 for accuracy and completeness.

[4] **SIGN** and **DATE** Attachment 1.

NOTE *Completing a Post-Job Review may be accomplished using the applicable P300 form or online (the preferred method since the institution has access to feedback and lessons learned http://int.lanl.gov/safety/iwmc/ [Click on the Submit IWD Part 4, Post-Job Review]).*

[5] **IF** any of the following occur:

- A new activity was completed for the first time
- A request was made by anyone involved with the performance of this procedure to perform a post-job review
- An abnormal event occurred
- A revision to an existing procedure was issued and it has been determined by the procedure owner or designee that a Post-Job Review is required

THEN PERFORM a Post-Job Review in accordance with P300.

[6] **IF** the Post-Job Review identified any necessary changes to this procedure,
THEN INITIATE a revision to this procedure.

6.2 Records Processing

Waste Handling Technician or Supervision

[1] **ENSURE** that documents generated by the performance of this procedure are processed as follows:

Record Identification	Record Type Determination	Protection/Storage Method	Processing Instructions
Appendix 1, WCG Drum Lift Pre-Engineered Production Critical Lift Plan Attachment 1, WCRRF WCG Horizontal Port Waste Removal Data Sheet	Quality Assurance (QA) Record	Records **SHALL** have a reasonable level of protection to prevent loss and degradation. Records **SHALL** be maintained in a one-hour fire rated metal file cabinet when not in use.	When the records are ready for final disposition, the record is transferred to Records Management in accordance with EP-DIR-AP-10003, Records Management Procedure For ADEP Employees.

7. REFERENCES

ABD-WFM-006, Technical Safety Requirements (TSRs) for Waste Characterization, Reduction, and Repackaging Facility (WCRRF)

EP-DIR-AP-10003, Records Management Procedure For ADEP Employees

EP-DIV-AP-0112, EWMO Pre-Job Briefings

EP-DIV-AP-20047, LTP Glovebox/Glovebag and Glove Safety Program

EP-DIV-REPORT-09, Engineering Path Forward Report for CMR Wing 2 Containers

EP-WCRR-FO-DOP-0201, WCRRF and Building TA-50-69 TSR Mode Change

EP-WCRR-WO-DOP-0221, WCRRF 55-Gallon Daughter Drum Assembly and Closure

EP-WCRR-WO-DOP-1197, WCRRF Loading/Unloading SWB or 85-Gal Drum

EP-WCRR-WO-DOP-1198, WCRRF Waste Characterization Glovebox Operations

EP-DIR-SOP-4004, Record Transmittal and Retrieval Process

7. REFERENCES (continued)

P101-18, Procedure for Pause/Stop Work

P101-25, Cranes, Hoists, Lifting Devices, and Rigging Equipment

P300, Integrated Work Management

P330-6, Nonconformance Reporting

APPENDIX 1
Page 1 of 9

WCG DRUM LIFT PRE-ENGINEERED PRODUCTION CRITICAL LIFT PLAN (P101-25 ATTACHMENT B)

Table B-1. LANL Critical Lift Plan for Pre-Engineering Production Lift	
Name and company of person preparing this plan: LANS	
Date prepared: _____	Date of lift: _____
Critical lift plan expiration date: N/A	PIC: _____
Client/customer: DOE/WIPP	Job #: N/A Project #: N/A
Lift location (building #, address, etc.): WCRRF, TA-50-69	This critical lift plan must be available when and where the lift is performed. How will this requirement be met? Kept on file in the WCRRF Operations Center.
A. Critical Lift Determination	
A lift will be determined critical if any of the following conditions are met. Check each answer with either a Yes or a No.	
1. If the load item were damaged or upset would it result in a release into the environment of radioactive or hazardous material exceeding the established permissible environmental limits?	Yes_____ No__✓__
2. Is the load item unique and, if damaged, would it be irreplaceable or not repairable and is it vital to a system, facility or project operation?	Yes_____ No__✓__
3. If the load item was damaged, would the cost to replace or repair the load item, or the delay in operations of having the load item damaged have a negative impact on facility, organizational, or DOE budgets to the extent that it would affect program commitments?	Yes_____ No__✓__
4. If the load were mishandled or dropped, would the event cause any of the above noted consequences to nearby installations or facilities?	Yes_____ No__✓__
5. Does the lift exceed 75% of the manufacturer's rated capacity for the crane, hoist, or mechanized equipment to be used in the lift?	Yes__✓__ No_____
6. Does the load item require special care in handling because of weight, size, asymmetrical shape, undetermined center of gravity, installation tolerances, or other unusual factors?	Yes_____ No__✓__
7. Is the lift an otherwise non-critical lift that must be made in close proximity to critical or expensive items that could be damaged as a result of contact with a hoisted load?	Yes_____ No__✓__
8. Does the lift use two or more cranes, hoists, pieces of mechanized equipment, or a combination of such equipment?	Yes_____ No__✓__
9. Is the lift such that the crane, hoist, or mechanized equipment could at any time come in contact with an energized high voltage power line?	Yes_____ No__✓__
10. Could failure of this lift significantly impact the confidence of LANL customers or sponsors in the ability of LANL to safely execute current or future missions?	Yes_____ No__✓__

APPENDIX 1
Page 2 of 9

Table B-1. LANL Critical Lift Plan (Cont.)

B. Pre-lift Checklist (Completed prior to each lift)

__ Crane's monthly and annual inspections current
__ Periodic maintenance complete
__ Crane inspected
__ Site-control in-place
__ Load test verified
__ Spotters in-place
__ Operator is qualified
__ Signal person identified
__ Riggers are qualified
__ Head-height checked
__ Rigging proof tested
__ Hoist-height checked
__ Proof tests verified
__ Signatures procured
__ Rigging inspected
__ Tailing info provided
__ Annual rig. Insp. current
__ Job briefing held
__ Work zones identified
__ Team is ready for lift

C. Personnel & Environmental Exposure

1. Any radiation exposure hazards? Yes
2. Any chemical exposure hazards? Yes
3. Any explosive hazards? No
4. Any exposure hazards to the public? No

If YES to any of the above, what precautions are needed?
1. RWP
2. IWD

5. Is EM&R notification required? No
When? N/A
Where? N/A
Who? N/A

D. Load Identification and Information

1. Load condition: ____ New ___ Used ✓ N/A
2. Wt. empty: N/A
3. Wt. of contents: N/A
4. Wt. of lifting beam: N/A
5. Wt. of rigging: N/A
6. Wt. of excess load material: N/A
7. Wt. of temporary lift frames: N/A
8. Total weight: ≥ 468 lb ≤ 624 lb
9. Source of load weight information: _____
WCRRF drum scale _____
(drawings, calculations, dynamometers, etc.)
10. Page on drawing: N/A
11. Revision #: N/A Revision date: N/A
12. Center of gravity has been identified: N/A
13. Dimensions: Standard 55-gal drum
14. Location and type of lift points are shown: See attached figure

E. Operating Equipment to be Used

1. Crane mfg. and model: Drum Lift: LANL Designed and Built
2. Crane S/N: N/A ID-No: Drum-01
3. Crane capacity: 624 lb
4. Trolley/travel restrictions: N/A
5. Load is what percent of crane capacity? 75-100 %
6. Are any crane, hoist, and equipment load charts required for this lift? Y____N✓
Are they available to the operator?
Y____N____ N/A✓

APPENDIX 1
Page 3 of 9

Table B-1. LANL Critical Lift Plan (Cont.)	
F. Rigging	**I. Sketches & Drawings**
1.Hitch type(s): N/A	In accordance with DOE-STD-1090-2007, *Hoisting and Rigging Standard,* rigging sketches must include--as applicable:
2. Sling type: WR____FW __ RS _ Chain ____ (If more than one, write the number of each type on the appropriate line) N/A	1. Identification and rated capacity of slings, lifting bars, rigging accessories, and below-the-hook lifting devices. N/A
3. Number of slings: N/A	2. Load-indicating devices. N/A
4. Size: N/A	3. Load vectors (Sling Tension). N/A
5. Shackle sizes: N/A	4. Lifting points. N/A
6. Shackle rated capacity: N/A tons	5. Sling angles N/A
7. Sling assembly rated capacity: N/A lbs.	6. Boom and swing angles N/A
8. Shackle secured to load by: N/A	7. Methods of attachment. N/A
9. Shackle & lifting lug mating are OK? N/A	8. Crane orientations. N/A
10. Temporary lift frames & weights: N/A	9. Other factors affecting equipment capacity, such as load path sketch, key point heights, floor or soil bearing capacity, etc. Yes
11. Supports & load grillages shown? N/A	10. Calculate and provide the rated capacity of equipment in the configuration in which it will be used. Yes Make sure that these items are included at a minimum.
G. Operating Area	**J. Notes/Things To Do**
1. Are obstructions present? No 2. Are clearance issues present? No 3. Is the lift area populated? No 4. Action items for 1, 2, & 3: Drawing provided	N/A
H. Practice Lift Required?	
1. Describe the lift N/A	
2. Team members involved in the practice lift must be those who will be involved in the actual lift. Are all of those members present? N/A	

APPENDIX 1
Page 4 of 9

Table B-1. LANL Critical Lift Plan (Cont.)

K. Personnel Assignments
List names of all persons involved in the lift and identify their roles (Operator, Signaler, Person In Charge [PIC], etc.). All must be qualified.

Name	Z Number	Role	Training Verified		Comments/Notes
			Y	N	
			Y	N	
			Y	N	
			Y	N	
			Y	N	
			Y	N	
			Y	N	

L. Review and Approval. List all that apply. (Must include the PIC and one other qualified person at a minimum and may include the health and safety rep., Responsible Line Manager [RLM], First Line Manager [FLM], responsible oversight org. rep., quality assurance rep., or others as required)

	Z Number	Organization	Concurrence / Approver's Signature
Responsible Line Manager (SOM)	125695	LTP-DDP	/s/ John Guadagnoli
Crane Program SME	219935	OSH-ISH	/s/ Clay Davis
IHS SME	120199	DSESH-EWMO	/s/ Robert Gardner Winkel
CSE	233208	ES-EWMO	/s/ Shawn West
PIC	240092	WCRRF LTP DDP	/s/ Clayton Mullins
WCRRF SOS	240092	WCRRF LTP DDP	/s/ Clayton Mullins

APPENDIX 1
Page 5 of 9

M. Pre-lift Meeting					
Name	**Z Number**	**Signature**	**Name**	**Z Number**	**Signature**

APPENDIX 1
Page 6 of 9

Load Schematic & Rigging Method

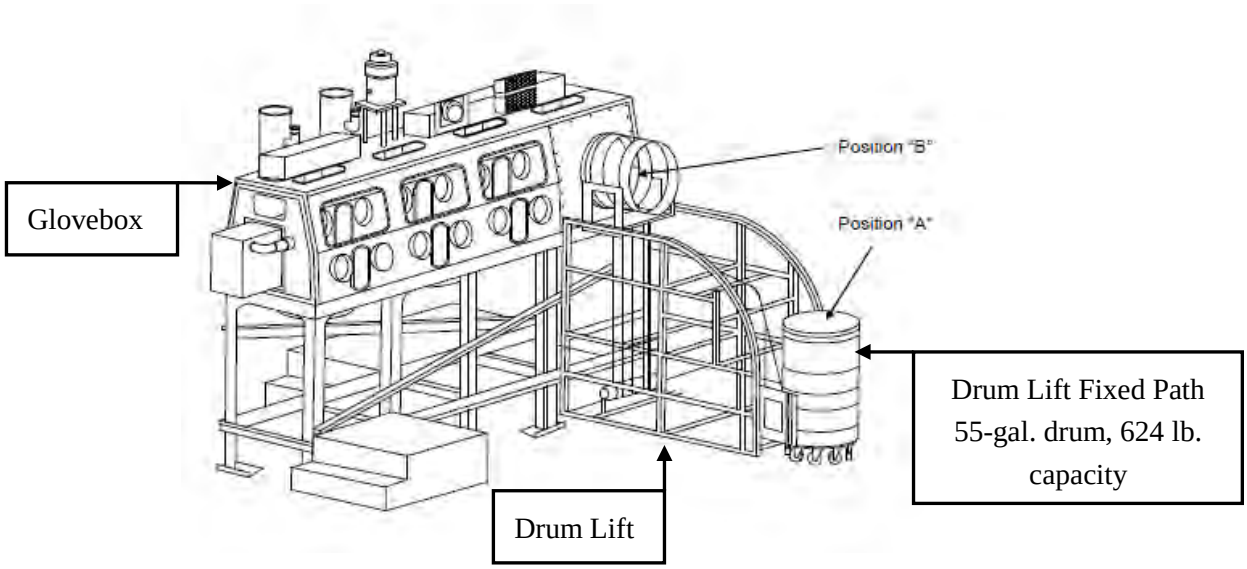

APPENDIX 1
Page 7 of 9

Load Handling Sequence & Procedures

Purpose

This critical lift plan is used for removing waste from the horizontal port of the WCG located in Building TA-50-69 at WCRRF that satisfy the critical lift requirements of P101-25 with the WCG Drum Lift. This critical lift plan must be used to lower a daughter drum weighing greater than 468 lb from the horizontal port using the WCG drum lift . This lift is designated a pre-engineered production lift and complies with the requirements of P101-25.

General Guidelines/Notes

This critical lift plan has been prepared in accordance with P101-25, Cranes, Hoists, Lifting Devices, and Rigging Equipment.

Drum handling operations involving removing waste from the horizontal port using the WCG drum lift into drums weighing more than 468 lb are performed using this procedure and lifting equipment specifically designed for this operation.

The following information **SHALL** be reviewed during the critical lift pre-job brief:

1. All lifting and signaling **SHALL** be performed by a qualified operator. Supervision will be by a designated Qualified Crane Operator and Rigger Person-In-Charge (PIC) and documented in Sections K and M of this Critical Lift Plan.

2. The WCG Drum Lift and drums **SHALL** be visually inspected by the operator and/or qualified PIC. Any noted substandard item **SHALL** be cause for suspending operations until an acceptable replacement is acquired.

3. The rigging procedure **SHALL** be followed. Where changes are required due to site conditions, the changes **SHALL** be reviewed and approved by the Qualified Crane Operator and Rigger PIC.

4. The weight of the load **SHALL** include the 55-gal drum and lead blankets (if used for shielding purposes). In no case should the lift exceed 624 lb.

5. Communications between the WCG pendant operator and PIC **SHALL** be clear and unobstructed. The primary system **SHALL** be voice communications. Only designated, qualified signalers **SHALL** give signals to the operator. However, the operator **SHALL** obey a stop signal at all times, no matter who gives the signal.

6. A pre-lift meeting with all responsible persons **SHALL** be held before the lifts and each person **SHALL** be assigned specific duties and sign the pre-lift meeting section (Section M).

7. The equipment to be used for this lift will the WCG Drum Lift.

APPENDIX 1
Page 8 of 9

Project Notes and Specifications

1. The primary goal is to perform a safe lift in a timely manner.

2. This lift has been frequently performed with equipment stated in this plan. A preliminary lift is not required but if any discrepancies are noted during the lift, the project **SHALL** be stopped and re-evaluated by the Qualified Operator, and Qualified Crane Operator and Rigger PIC.

3. The drum **SHALL** be positioned secured in the WCG Drum Lift to facilitate safe and efficient operation. The drum lift pendant operator **SHALL** announce operation of the lift before commencing raising/lowering of the drum and all personnel **SHALL** stand clear and to the side of drum movement. The work area for assembling the payload **SHALL** be limited to personnel necessary for the operation (for example: operator, signal personnel, PIC, and RCTs).

4. The lift requires understanding by the entire crew. This lift plan **SHALL** be thoroughly reviewed by the personnel performing the lift and the Critical Lift / Pre-Lift Meeting **SHALL** be conducted before the lift to ensure that all personnel are aware of their assigned duties. Each person involved in the lift must attend the meeting and sign the attendance sheet (see Sections K and M).

Competent Person / Lift Supervisor

The responsible person for this lift is the designated Qualified Crane Operator and Rigger PIC.

Emergency Action Plan

1. In the event that an emergency occurs, all operations **SHALL** be discontinued and any raised load **SHALL** be lowered/secured, if possible. For specific casualties, operators will also perform required actions of applicable procedures in the WCRRF Response Manual.

2. Each portion of the lift presents a slightly different set of variables as related to a direction and area where the components may be set down temporarily during an emergency.

3. During the pre-lift meeting the operators, riggers, and spotter are to specifically discuss emergency actions at various points during the lift. If the raised load has to be secured the operator will do so and contact the RCT and Qualified Crane Operator and Rigger PIC. All non-essential personnel are to be kept clear of the lift area.

4. The operator and rigging personnel will not resume the lift operations without approval from the RCT and the Qualified Crane Operator and Rigger PIC.

5. In the event of an equipment malfunction and the drum cannot be lowered/secured:

   - The operation will be placed in a safe configuration.
   - The waste will be unloaded from the drum and the drum will be manually removed from the drum lift, if possible, or the CSE will be notified for the applicable actions.

APPENDIX 1
Page 9 of 9

Hazard Assessment

This lift has been reviewed in great detail to ensure a safe lift and minimize hazards. The following items have been identified as unique for this lift.

In no case **SHALL** material being lifted weigh more than 624 lb. (drum + lead shielding).

Test Lift—A test lift is not required for this operation.

Travel Path—At the pre-job/lift briefing a spotter(s) **SHALL** be designated to observe the load along the entire travel path (consider slopes and uneven surfaces).

Overhead Instructions—The Qualified Crane Operator and Rigger PIC and rigging crew **SHALL** physically verify the travel path is clear of overhead obstructions before beginning the lift.

Working Around the Load (Cone of Safety) - Absolutely NO ONE **SHALL** be under the load, or while it is being raised, lowered, or moved. The Qualified Crane Operator and Rigger PIC **SHALL** ensure that the area (in front of the WCG Drum Lift) is clear of non-essential personnel. Specific placement of operators and RCTs **SHALL** be established during the pre-lift meeting.

Securing the Drum Lifting Assembly—The rigging crew **SHALL** inspect the WCG Drum Lift before lifting a drum.

Equipment List—Ensure the following equipment is present, has undergone physical inspection, is properly calibrated, and is ready to support the critical lift steps:

- WCG Drum Lift

Work Steps for Loading a 55-Gal Drum Using the WCG Drum Lift

Step 1 Verify the drums weighs less than 624 lb.

Step 2 Obtain key from key box, insert key, and turn on the power to the drum lift.

Step 3 Using the drum lift pendant, lower the drum lift to the lower limit switch or until the bellyband of the lift cradle can grasp the drum evenly.

Step 4 Position the drum on the drum lift with the drum bolt ring accessible for lid removal when inside the glovebox.

Step 5 Close and secure the bellyband, ensuring the bag-off sleeve does not get caught on the bellyband.

Step 6 Raise the drum to the horizontal port and stop, leaving an adequate gap (approximately 12 inches) to mount the bag-off sleeve to the horizontal port.

Step 7 Bag on the parent drum in accordance with this procedure.

Step 8 Turn off the power to the drum lift, remove key, and place in key box.

ATTACHMENT 1
Page 1 of 1

WCRRF WCG HORIZONTAL PORT WASTE REMOVAL DATA SHEET

4.1[1] WCRRF Operations Manager Approval: _____ / _____ / _____
Print Signature Date

4.1[6] Date: _____

4.1[7] **($)** TA-50-69 is in the OPERATIONS MODE (TSR 1.2)**:** ☐ SAT ☐ UNSAT

4.2[2] Parent Drum Number: _____
Parent Drum Weight: _____ lbs

4.2[4] Daughter Drum Number: _____

4.2[5] **($)** Estimated Daughter Drum Weight < 624 lbs (SR 4.5.1)**:** ☐ SAT ☐ UNSAT

4.2[6][A] Critical Lift Plan is required: ☐ YES ☐ N/A

4.2[8] Prerequisite actions complete: ☐ SAT ☐ UNSAT

5.[23][A] Additional Horizontal Port Daughter Drum Waste Weight _____ lbs

5.[23][B] Final Horizontal Port Daughter Drum Weight: _____ lbs

5.[23][C] **($)** Final Horizontal Port Daughter Drum Weight < 624 lbs (SR 4.5.1)**:** ☐ SAT ☐ UNSAT

Comments: _____

6.1.[1] Performed By: _____ / _____ / _____ / _____
Operator (print) Signature Z # Date

6.1[4] Reviewed By: _____ / _____ / _____ / _____
Supervisor (print) Signature Z # Date

EP-WCRR-WO-DOP-1197, WCRRF Loading/Unloading SWB or Overpack Drum

LAUR-14-24884

Immediate Procedure Change (IPC) Cover		
Section 1 – Originator Request		
Document No.: EP-WCRR-WO-DOP-1197	Revision No.: 1	IPC No.: 1
Title: WCRRF Loading/Unloading SWB or Overpack Drum		

Description of need and requested action (Attach document mark-up and numbered additional sheets, if needed):

Revise procedure to allow loading and unloading waste containers from either an 85- or 110-gal overpack drum by replacing "85-gal drum" with "overpack drum" throughout. Modified title. Made editorial changes as needed. No additional hazards were introduced in this IPC.

Originator Name (print):	Organization:	Z#:	Date:
Jeff Martin	EWMO Procedures	209703	4/29/14

Section 2 –Reviews

Discipline:	Name:	Signature:	Date:
WCRRF SOM	J. Guadagnoli/R. Axtell	/s/ John Guadagnoli	4/30/14
WCRRF SOS	C. Mullins/J. Jerez/G. Martinez	/s/ Jose Jerez	4/30/14
WCRRF OCO	T. Coleman/C. Velarde	/s/ T. Coleman, /s/ C. Velarde	4/30/14
Engineering	V. Rhodes/S. West	/s/ Val Rhodes	4/30/14
QA	Robert Trujillo	/s/ Robert Trujillo	4/30/14
IH	Robert Winkel	/s/ Robert Winkel	4/30/14
RP	Ken Courville	/s/ Ken Courville	4/30/14

USQ/USI Number: WCRRF-14-237-D, R.0 ☐ N/A

Section 3– Final Approvals

FOD Concurrence:	Print Name and Title:	Z#:	Date:
/s/ John Guadagnoli	John Guadagnoli, LTP-DDP SOM	125695	4/30/14
☒ Permanent ☐ Limited Use	Effective Date: 5/5/2014 Expiration Date: N/A		

Comments: Art Crawford 080070 4/30/14 unclassified

Responsible Line Manager Signature:	Print Name and Title:	Z#:	Date:
	Lou Jalbert, LTP-DDP OM	121997	5-1-14

IPC-1

WCRRF Loading/Unloading SWB or Overpack Drum

Effective Date: 3-31-2014

Hazard Class:	☐ Low	☒ Moderate	☐ High/Complex
Usage Mode:	☐ Reference	☐ UET	☒ Both UET and Reference

The Responsible Manager has determined that the following organizations' review/concurrence is required for the initial document, and for major revisions a same type and level review is required. Review documentation is contained in the Document History File:

Engineering
Environmental Stewardship
Fire Protection Engineering
Industrial Hygiene and Safety
Quality Assurance
Radiation Protection
Shift Operations Manager
Site Services Contractor
Subject-Matter Expert

Responsible Manager, LTP-DDP Operations Manager

Name (print)	Z#	Signature	Date
Lou Jalbert	121997	/s/ Lou Jalbert	3-27-2014

Classification Review: ☐ N/A ☒ Unclassified ☐ UCNI ☐ Classified

Name (print)	Z#	Signature	Date
Art Crawford	088070	/s/ Art Crawford	3-27-2014

Working Copy / Information Only (circle one)
Initials / Date: _____/_____

This document fully satisfies the requirements of P300, Integrated Work Management, in order to systematically describe the work activity, the associated hazards, and the controls that **MUST** be employed to mitigate the risks.

HISTORY OF REVISIONS

Document Number	Issue Date	Action	Description
EP-WCRR-WO-DOP-0236, R.0	May 2007	New Document	
EP-WCRR-WO-DOP-0236, R.1	July 2007	Minor Revision	Clarified steps to allow lowering of a drum to a drum dolly or the ground. Clarified steps in critical lift plan for removing an inner drum from an 85 gallon overpack.
EP-WCRR-WO-DOP-0236, R.2	August 2007	Minor Revision	Changed procedural max weight of 85 gallon drum from 700 to 725 lbs. to match ordinary lift plan. Reworded steps for removing an 85 gal. drum from an SWB to allow for adjusting cinch straps as necessary, also provided a note to specify proper placement of the cinch strap.
EP-WCRR-WO-DOP-0236, R.3	August 2007	Major Revision	Added warning concerning pinch points while erecting an 85 gallon drum inside an SWB. Added new reference for Verifying WCRRF Scales. Added prereq. to ensure that the weekly Platform Scale Calibration Verification has been performed. Changed max. weight of drum from 625 to 624 lbs. to compensate for tolerance of platform scale.
EP-WCRR-WO-DOP-0236, R.4	November 2007	Major Revision	Revised to reference new Waste Container Traveler (EP-WCRR-WO-DOP-0299). Traveler will be used to document critical data and sign-offs. Procedure changed from UET to Reference. Included provision to allow bag sleeve to remain on degraded drums based on conditions.
EP-WCRR-WO-DOP-0236, R.5	December 4, 2008	Major Revision	Revise procedure to incorporate new sections for loading an SWB or 85-gal drum. Make editorial corrections such as formatting and changing procedure title.
EP-WCRR-WO-DOP-0236, R.6	March 9, 2010	Major Revision	Revise procedure to add ISI 6.3.6, TRU Waste Container (Inside Building TA-50-69) in the Scope, Precaution and Limitations, and reference in Step 8.[9]. Made editorial corrections as necessary. No new hazards are being introduced by this revision.

HISTORY OF REVISIONS (continued)

Document Number	Issue Date	Action	Description
EP-WCRR-WO-DOP-0236, R.7	April 14, 2010	Major Revision	Added two documents to Reference section. Clarified TSR and operational limits in Section 5. Deleted step to weigh 85-gal prepped drum in Section 7. Deleted specific drum labeling instructions and added instruction to label drums per the drum labeling procedure, EP-DIV-DOP-0103, in Section 9. Made changes for editorial consistency (no revision bars used for minor editorial changes). Updated Attachments 1 and 2. Changed document type from Reference to UET on attachments. No new hazards were introduced into this revision.
EP-WCRR-WO-DOP-0236, R.7 IPC-1	April 4, 2011	IPC	Revise procedure to allow the preparation of the bag-off bag independent of the preparation of the drum. Additionally, allow multiple drums to be unloaded before preparing the drum for loading onto the WCG. Make editorial corrections as necessary. This revision does not introduce any new hazards.
EP-WCRR-WO-DOP-0236, R.7 IPC-2	April 18, 2011	IPC	Revise procedure to correct procedure number and title in step 8.[13] and Reference section. This revision does not introduce any new hazards.
EP-WCRR-WO-DOP-0236, R.8	April 13, 2012	Major Revision	Revise procedure to incorporate new procedure format and incorporate lessons learned such as the inspection of NFT vent seals. Incorporate the use of the swivel hoisting ring for removing/installing a SWB lid and other process improvements. No new hazards are introduced by this revision. This revision is a total rewrite and revision bars have been omitted. This revision supersedes EP-WCRR-WO-DOP-0235 and EP-WCRR-WO-DOP-0299.

HISTORY OF REVISIONS (continued)

Document Number	Issue Date	Action	Description
EP-WCRR-WO-DOP-0236, R.9	May 7, 2012	Major Revision	Revise procedure to incorporate instructions for the use of a hard, plastic sheet in order to load empty parent drums into an 85-gal overpack drum (PFITS 2011-3456). Make editorial corrections as necessary. No new hazards are introduced by this revision.
EP-WCRR-WO-DOP-0236, R.10	July 27, 2012	Major Revision	Revise procedure to provide instructions for the disposition of liquid collected from a parent drum that is contained inside of a secondary containment around the parent drum. Make editorial corrections as necessary. No new hazards are introduced by this revision.
EP-WCRR-WO-DOP-0236, R.11	April 29, 2013	Major	Revised procedure to add forklift critical lift load charts. Added steps for handling a TRU waste overpack inner container that does not possess an approved WIPP filter. Reference updates, editorials corrections. No additional hazards were identified during this revision. Revision bars in the left column display location of changes.
EP-WCRR-WO-DOP-0236, R.12	August 29, 2013	Major Revision	Revised to rearrange steps in Step 6.1[2][C]. Update statement for WIPP filters in the precautions and limitations. Revise procedure to incorporate steps for the implementation of WCATS. Make editorial corrections as necessary. No additional hazards were identified in this revision. Rev bars in the left column display location of changes.
EP-WCRR-WO-DOP-0236, R. 12 IPC-1	January 3, 2014	IPC	Revised to add Steps to Section 6 for handling stripped SFHCS. Added Step 6.1[13] for checking for burrs on container with cheese cloth. Added additional precautions and limitations for use of hand and power tools.

HISTORY OF REVISIONS (continued)

Document Number	Issue Date	Action	Description
EP-WCRR-WO-DOP-1197, R. 0	January 31, 2014	Major Revision	Revised to add new requirements for Critical lift per P101-25, Cranes, Hoists, Lifting Devices, and Rigging Equipment. Added precautions and limitations for use of hand and power tools. Added updates for performing a critical lift in accordance with P101-25 Attachment B Revision 2. New procedure number to align with document control. No additional hazards were introduced to the hazard analysis. No Rev bars major revision.
EP-WCRR-WO-DOP-1197, R.1	March 31, 2014	Minor Revision	Revised to incorporate add history information for EP-WCRR-WO-DOP-0236, R. 12 IPC-1. Added steps for checking for burrs on drum during unloading. Added additional steps for conducting a Test Execute. Remove LOQI list from Appendix 2. Added LANL footer to Appendix 2. Added Step 4.[13] for use of forklifts.
EP-WCRR-WO-DOP-1197, R.1 IPC-1	May 5, 2014	Immediate Procedure Change	Revised procedure to allow loading and unloading waste containers into/from either an 85- or 110-gal overpack drum by replacing “85-gal drum” with “overpack drum” throughout. Modified title. Made editorial changes as needed. No additional hazards were introduced in this IPC.

TABLE OF CONTENTS

Section Page

TITLE PAGE 1
REVISION HISTORY 2
TABLE OF CONTENTS 5

1. PURPOSE 7

2. SCOPE 7

3. PRECAUTIONS AND LIMITATIONS 7

4. PREREQUISITE ACTIONS 13
4.1 Planning and Coordination 13
4.2 Special Tools and Equipment, Parts, and Supplies 15
4.2.1 Measuring and Test Equipment (M&TE) 15
4.2.2 Special Tools and Equipment 16
4.2.3 Consumables 17
4.3 Field Preparation 17

5. PERFORMANCE—OVERPACK DRUM ASSEMBLY PREPARATION 18

6. PERFORMANCE—UNLOADING SWB OR OVERPACK DRUM 22
6.1 Unloading SWB 22
6.2 Unloading Overpack Drum 29
6.3 Parent 55-Gal Drum Preparation 35

7. PERFORMANCE—LOADING SWB OR OVERPACK DRUM 40

8. POST-PERFORMANCE ACTIVITY 50
8.1 Disposition 50
8.2 Records Processing 52

9. REFERENCES 52

Appendices
Appendix 1, Nuclear Filter Technology Filtered Vent Seals 54
Appendix 2, Loading/Unloading Degraded Drum P101-25 Attachment B Critical Lift Plan 55

Attachments
Attachment 1, WCRRF Overpack Drum Assembly Preparation Data Sheet 71
Attachment 2, WCRRF Parent 55-Gal Drum Preparation Data Sheet 72
Attachment 3, WCRRF SWB Loading Data Sheet 73
Attachment 4, WCRRF Overpack Drum Closure Data Sheet 74

1. PURPOSE

IPC-1

This procedure provides detailed instructions for loading and unloading a transuranic (TRU) waste container into/from a Standard Waste Box (SWB) overpack or overpack drum (e.g., 85-gal or 110-gal drum) for processing in the Waste Characterization Glovebox (WCG) at the Waste Characterization, Reduction, and Repacking Facility (WCRRF).

2. SCOPE

IPC-1

This procedure applies to all personnel who supervise or perform SWB or overpack drum loading/unloading activities at WCRRF.

This procedure provides instructions for loading and unloading a TRU waste container into/from an SWB or overpack drum. This procedure provides instructions for wrapping degraded drums or TRU waste containers in protective covering after being removed from an overpack container in accordance with ABD-WFM-006, Technical Safety Requirements for Waste Characterization, Reduction, and Repackaging Facility (WCRRF); In-Service Inspection (ISI) 6.3.6, TRU Waste Container (Inside Building TA-50-69).

TRU waste that has been identified as <u>not</u> satisfying the Waste Isolation Pilot Plant (WIPP) waste acceptance criteria (WAC) must be remediated to satisfy the WIPP-WAC. Prohibited items must be removed or corrected and the container must also satisfy limits on the amount of radioactive material in each container. Containers that fail to satisfy the WIPP-WAC may be sent to WCRRF in an SWB or overpack drum in order to remediate the contents and repackage waste in accordance with WIPP-WAC.

This procedure is performed in conjunction with the Waste Compliance and Tracking System (WCATS) desktop application, in order to overpack a single waste drum (e.g., 55-gal drum) into an overpack drum (e.g., 85-gal or 110-gal drum) or to overpack (consolidate) multiple drums (e.g., four 55-gal drums) into an SWB.

3. PRECAUTIONS AND LIMITATIONS

- This procedure contains special procedure step markings. **($)** is used to identify steps that implement WCRRF Safety Basis requirements. Steps containing **($)** may <u>not</u> be changed without Engineering approval to ensure the safety envelope is maintained.

- Drums placed on the WCG drum lift are also administratively controlled to 624 lbs.

3. PRECAUTIONS AND LIMITATIONS (continued)

- The most current list of Waste Isolation Pilot Plant (WIPP)-approved filtered vents are listed in DOE/WIPP 11-3384, CBFO Approved Filter Vents.

- **($)** During movements of TRU waste containers requiring forklifts, qualified operators and spotters **SHALL** be used to ensure safe lift and movement operations. (AC 5.6.10 and AC 5.8)

- **($)** TRU waste containers **SHALL** not be stacked and **SHALL** not be lifted higher than 4 ft, excluding the WCG drum lift and lifts during loading or unloading from delivery trucks. (SAC 5.10.2.2)

- Forklift and crane movements present unique hazards; ensure work area is clear of hazards and unneeded equipment. All personnel should be briefed on the planned work.

- **($)** Steps of this procedure carry out a critical lift as defined by the TSRs and by LANL P101-25, Cranes, Hoists, Lifting Devices, and Rigging Equipment. (SAC 5.10.3.1)

- The approximate weight of load should be known before moving and the appropriate capacity lift selected. Be aware of uneven loading and shifts in the load when moving.

- Personnel **SHALL** use the appropriate drum handling equipment, such as cut resistance (e.g., leather or leather palm mechanic) gloves, when moving drums or when removing or applying locking rings.

- Any manual movements of 55-gal and larger drums, whether empty or containing waste, without mechanical assistance, **SHALL** only be performed as a last resort and with written (e.g., email or memorandum) approval from one of the following individuals:
  - Program Director or Deputy
  - EWMO-FOD or Deputy
  - Project Manager

- Written approval **SHALL** contain a description of the activity to be performed and the non-mechanically assisted method approved to be used. A copy of the written approval **SHALL** be maintained in the appropriate Operations Center.

- Personnel handling or exposed to Beryllium **SHALL** be properly trained and placed in the Site Beryllium program per P101-21, Chronic Beryllium Disease Prevention Program

3. PRECAUTIONS AND LIMITATIONS (continued)

- **($)** No combustibles **SHALL** be stored within the WCG exclusion zone. The WCG exclusion zone is 10 ft around the WCG, up to the GBE, or up to the walls of Room 102, whichever is less. The following are excluded from this limitation: (LCO 3.4)
  - INVENTORY that is in the WCG or staged in BUILDING TA-50-69.
  - Combustible components of support equipment (e.g., wiring insulation, operator platforms and rubber mats) within the WCG Exclusion Zone and associated with WCG processing.
  - Drum liners or wrapping around DEGRADED/LOSS OF INTEGRITY drums that are inside BUILDING TA-50-69 being loaded and working amounts of materials necessary to complete bag on/off operations such as tape, cheese cloth, and extra operator gloves.
  - Hydraulic fluid within the engineered, closed-loop, containment systems.
  - Combustible components associated with a forklift.

- **($)** Ensure that a known degraded drum or TRU waste container exhibiting signs of loss of integrity is wrapped in protective covering after being removed from an overpack. (ISI 6.3.6)

- At no time is any individual permitted to place any portion of their body under a suspended load.

- A qualified person as defined by P101-25 is a person who possesses a recognized degree, certificate, or professional standing or has extensive knowledge, training, and experience in a related or applicable field and who has successfully demonstrated his/her ability to solve or resolve complex issues related to the subject matter, the work, or the project.

- Only experienced operators who have been trained and qualified to operate the specific equipment assigned will be authorized to make the lift. [P101-25 3.1.2(3)]

- Only signalers who are designated, qualified and trained in accordance with this procedure give signals to the operators but that the operator will obey a STOP signal at all times, no matter who gives the signal. [P101-25 3.1.2(4)]

- To comply with the intent of the As Low As Reasonably Achievable (ALARA) Program, all personnel **SHALL** apply the principles of time, distance, and shielding when working with radiological materials.

3. PRECAUTIONS AND LIMITATIONS (continued)

- Waste containers with liquids (any amount or configuration) that have not been solidified (absorbed) **SHALL** be managed on secondary containment pallets.

- Activities, items, and containers **SHALL** satisfy approved design specification, regulatory requirements, process-specific parameters, and procedural requirements. Activities, items, or containers that do not conform to the approved specifications and requirements are considered nonconforming and Nonconformance Reports (NCRs) **SHALL** be generated in accordance with P330-6, Nonconformance Reporting, as required.

- When a worker observes an unsafe condition or act that may pose an imminent danger or other safety concern/hazard, the worker has the authority and responsibility to inform the worker engaged in the work and request that the work activity be paused and/or stopped based on the risk posed to the individual, the employees, the environment, or the facility in accordance with P101-18, Procedure for Pause/Stop Work.

- Avoid slips, trips, and falls by wearing the proper footwear with slip-resistant soles and using handrails when using stairs. Use established pathways when available and avoid walking on uneven or unstable surfaces.

- Not Applicable (N/A) is documented on the attachments during the performance of this procedure indicating information that is not required to be recorded.

- The WCATS mobile device wireless capability has not been activated at WCRRF and therefore the WCATS mobile device must be placed in a cradle in order to connect to the internet.

- Waste containers are physically transferred after the moves have been electronically accepted in the WCATS database. If a physical transfer is postponed or does not take place for any reason after electronic processing in WCATS, then the individual who performed the WCATS task must REVOKE their signature in WCATS to cancel the move in WCATS.

- WCATS is designed to a provide functionality allowing any task performed on the WCATS mobile device to be conducted from the WCATS desktop application. The feature provides additional methods in the event the WCATS mobile device becomes inoperable or malfunctions

3. PRECAUTIONS AND LIMITATIONS (continued)

- The Class 2 laser scanning head on the WCATS mobile device can cause eye injury if eye is exposed to the beam. Do not allow eyes of user or observers to become exposed to the beam.

- The WCATS mobile device contains lithium-ion battery. Exposure to extreme temperatures (greater than 140 °F) may cause battery to explode. Do not store the WCATS mobile device where temperatures may exceed 140 °F. Keep mobile device out of direct sunlight for extended periods of time when not in use. Do not incinerate, mutilate, short circuit, or disassemble the battery pack. Do not dispose of in municipal waste receptacles. Dispose of in properly marked universal waste disposal areas.

- Hand and power tools **SHALL** be inspected by the user prior to use.

- Hand and power tools **SHALL** be used for their intended purpose. All guards **SHALL** be in place and no modification made.

- Power tools **SHALL** be plugged into GF-CI protected outlets and will be UL listed with a three wire grounded plug. If not three wired, the tool **SHALL** be double insulated.

- Power cord **SHALL** be inspected by the user prior to use and protected from unnecessary damage.

- Prior to changing accessories, the tool **SHALL** be disconnected from the power source.

- Fantastic® **SHALL** be used as a lubricant when using the power tools (i.e., reciprocating saw or drill) for bolt cutting operations.

- All critical lift plans executed by LANL personnel **SHALL** be developed using Attachment B, LANL Critical Lift Plan, of P101-25, Cranes, Hoists, Lifting Devices, and Rigging Equipment.

- The instructions in this procedure satisfy the P101-25 ordinary lift requirements and the use of LANL Form 1611, Ordinary Lift Procedure, is not required. Not all of the items listed on Form 1611 are captured in this procedure because this procedure is performed using gantry cranes and forklifts in preapproved locations and lifts standard waste containers of a known size and volume.

3. PRECAUTIONS AND LIMITATIONS (continued)

- Forklift operations are governed by the LANL procedure P101-4, Forklift and Powered Industrial Trucks. P101-4 requires the completion of the applicable sections of a LANL procedure P101-25 Attachment B for critical lifts involving a forklift or powered industrial truck. Forklift operations not involving a critical lift (e.g., load suspended below the forks of the forklift) are not required to comply with the requirements of P101-25.

- Support Services Subcontractors executing this procedure **SHALL** comply with the safety and health requirements documented in contractual agreements with the LANL.

IPC-1

- The Critical Lift Attachment B has been incorporated into this procedure in Appendix 2, Loading/Unloading Degraded Drum Attachment B Critical Lift Plan.

- The critical lift plan contained is this procedure uses a forklift as the primary lifting device with ancillary rigging equipment to hoist degraded/loss of integrity drums. The illustrations and instructions are incorporated into Appendix 2 for the following critical lifts:
  - Hoisting a 55-Gal Degraded/Loss of Integrity Drum from an Overpack Drum
  - Hoisting an Overpack Degraded/Loss of Integrity Drum from an SWB

- **($)** A critical lift plan **SHALL** be implemented for lifts and forklifts movements involving DEGRADED or LOSS OF INTEGRITY TRU drums when not secured in a TRU WASTE CONTAINER. (SAC 5.10.3.1)

4. PREREQUISITE ACTIONS

4.1 PLANNING AND COORDINATION

Supervisor or designee

[1] **ENSURE** that the current revision of this document is available, and **IDENTIFY** this document as Working Copy or Information Only on the Title Page.

[2] **ENSURE** that a pre-evolution briefing is conducted and documented for all personnel involved in the performance of this procedure, in accordance with EP-DIV-AP-0112, EWMO Pre-Job Briefings. [P101-25 3.1.2(2) and (8)]

[3] **ENSURE** that the performance of this activity is scheduled on the WCRRF facility schedule.

[4] **ENSURE** that Radiological Work Permit (RWP) has been issued for the planned activity.

NOTE 1 *The Waste Handling Technician performs the duties of the Qualified Crane Operator and Rigger and spotter in this procedure as long as they are trained and qualified.*

NOTE 2 *The Waste Handling Technician may perform the duties of the Qualified Crane Operator and Rigger PIC in this procedure as long as they have completed training and are current as a Qualified Crane.*

[5] **ENSURE** that, as a minimum, the following personnel trained to the use of this procedure are available for the performance of this procedure, as required:

- Two RCTs
- Two Waste Handling Technicians (with Qualified Crane Operator and Rigging for critical lifts)
- One Person-in-Charge (PIC) (e.g., supervisor)

[6] **ENSURE** that the weight of the waste container does <u>not</u> exceed 75% of the maximum lifting capacity of the rigging and lifting equipment.

[7] **ENSURE** that the weekly Platform Scale Calibration Verification in accordance with EP-WCRR-WO-DOP-0239, WCRRF Scale Verification, has been performed.

4.1 PLANNING AND COORDINATION (CONTINUED)

NOTE 1 *The Technical Safety Requirements for WCRRF specify that a critical lift plan is required for lifts and forklift movements involving DEGRADED or LOSS OF INTEGRITY drums.*

NOTE 2 *Load Schematic and Rigging Method Load Travel Path/Personnel Placement, and Load Handling Sequence and Procedures pages of the Attachment B are completed and attached to Appendix 2.*

NOTE 3 *The degraded drum activity is a pre-engineered and approved critical lift. Some sections of Appendix 2 have items that are already pre-populated, therefore the PIC will be required to complete the remaining items and sections left blank.*

NOTE 4 *Degraded drum activities are considered a pre-engineered critical lift in accordance with P101-25 and require a Critical Lift Plan when the lift satisfies the critical lift criteria of P101-25. Critical lifts executed by LANL personnel* ***SHALL*** *be performed and documented in accordance with Appendix 2. Subcontract personnel* ***SHALL*** *comply with the safety and health requirements documented in contractual agreements with LANL and may use the information provided in Appendix 2.*

IPC-1

NOTE 5 *This procedure contains an pre-engineered production critical lift plan. If any of the elements in Appendix 2 need to be modified, and the situation requires a Critical Lift prior to revising the procedure, then obtain an Attachment B from P101-25 and perform the Critical Lift using the new P101-25 Attachment B.*

NOTE 6 *Appendix 2 is a pre-engineered critical lift plan for degraded or loss of integrity drums. Once Appendix 2 has been completed for the first waste container, the paperwork may be duplicated for each additional lift with the following conditions:*

- *The critical lifts performed are in the same shift.*
- *The critical lift team members do <u>not</u> change (i.e., PIC, Crane Operator).*
- *The critical lift activities performed are the same for each drum handled as specified in Appendix 2.*

[8] **IF** performing a Critical Lift,
THEN GENERATE an approved Critical Lift Plan (e.g., P101-25 Attachment B or Appendix 2).

4.1 PLANNING AND COORDINATION (CONTINUED)

[9] **($) ENSURE** that WCRRF and TA-50-69 are in the OPERATION MODE. (TSR 1.2)

[10] **IF** a waste container is to be loaded into an SWB,
THEN ENSURE that an SWB is prepared in accordance with EP-WCRR-WO-DOP-1200, Preparing and Closing Standard Waste Boxes.

NOTE *When a single drum is to loaded (overpacked) into an overpack drum a set of five Shorty labels must be obtained from the Waste Help Team (wastehelp@lanl.gov) with the same unique identifier number as the drum being overpacked.*

[11] **ENSURE** that the TRU daughter waste container labels (e.g., Shorty barcode labels) have been obtained from the Waste Help Team (wastehelp@lanl.gov).

[12] **ENSURE** that beryllium-containing waste is identified and appropriately labeled before handling and that any additional controls are in place before processing.

[13] **ENSURE** that forklifts are inspected and operated in accordance with EP-DV-DOP-20086, EWMO Division Specific Forklift and Drum Handler Equipment Operations.

4.2 SPECIAL TOOLS AND EQUIPMENT, PARTS, AND SUPPLIES

4.2.1 Measuring and Test Equipment (M&TE)

NOTE *Torque wrenches are calibrated either as a percentage of full scale or a percentage of indicated value. The torque wrench accuracy information is found on the Calibration Certificate document. Torque wrenches are not calibrated in, nor are they to be used below 20% of their full range.*

Supervisor or designee

[1] **ENSURE** that the following measuring and test equipment are available, as required:
- Torque wrench calibrated to and capable of torquing 0 to 144 in-lb (0 to 12 ft-lb)
- Torque wrench calibrated to and capable of torquing 12 to 40 ft-lb
- Torque wrench calibrated to and capable of torquing 55 to 75 ft-lb

[2] **IF** a torque wrench has exceeded the calibration due date,
THEN:

[A] **LABEL** or **MARK** the torque wrench as not to be used.

[B] **OBTAIN** another torque wrench that is within the calibration due date.

4.2.2 Special Tools and Equipment

Supervisor or designee

[1] **ENSURE** that the following special tools and equipment are available, as required:

- All PPE as required by the RWP or supervision, as applicable, including but not limited to:
  - Cut resistant (e.g., leather or leather palm) gloves for drum handling
  - Eye protection at all times (safety glasses with side shields when not wearing a full-face respirator)
  - Hard hats (when specified by IHS staff)
  - Long pants and sleeved shirt
  - Safety shoes at all time
  - Thermoluminescent dosimeter
- 1/4 in. – 20 UNC-2A x 0.29 in. swivel hoisting ring
- 15/16 in. tools (e.g., ratchets and wrenches for removing and installing drum closure rings
- Certified gantry crane
- Certified hoisting and rigging equipment (e.g., lifting magnets, slings, shackle, attachments, cinch strap, and gantry cranes)
- Cutting tool (e.g., utility knife)
- Flashlight
- Inspection mirror or equivalent
- Local Exhaust Ventilation Unit (to be used as required by the RCT and RWP for opening drums)
- Non-sparking pry bar
- Plastic drum sleeve (for loading empty 55-gal drums)
- Reciprocating saw and blades or hacksaw
- Rivnut removal tool (e.g., dikes, wire cutters, or chisel and hammer)
- WCATS mobile device

4.2.3 Consumables

Supervisor or designee

[1] **ENSURE** that the following consumables are available, as required:

- Cheese cloth
- Decontamination supplies
- Drum bag-off bags
- Duct tape or equivalent
- Labels (e.g., radioactive and waste container)
- Nitrile gloves or equivalent
- Plastic waste bags
- Thread-locker (e.g., Loctite® 271 or Loctite® 680)
- WIPP-approved filtered vents (e.g., NucFil-019DS, NucFil-13, or NucFil-072S)

4.3 Field Preparation

Supervisor or Waste Handling Technician

[1] **ENSURE** that the hoisting and rigging equipment (e.g., lifting magnets, slings, and gantry crane) have been inspected and are approved for use in accordance with P101-25, as necessary.

5. PERFORMANCE—OVERPACK DRUM ASSEMBLY PREPARATION

This section is a stand-alone section and may be performed independently of, or in conjunction with, other Performance sections.

NOTE 1 *In order to open an overpack drum the surface contamination values on the overpack drum must be known to be less than or equal to the values listed in Table 14-2, Surface Contamination Values, of P121, Radiation Protection or otherwise the overpack drum must be opened within a contamination control enclosure.*

NOTE 2 *The TRU DRUM PREPARATION task on the WCATS mobile device may be performed in conjunction with the performance of the physical build of an overpack drum.*

Supervisor or Waste Handling Technician

[1] **ENSURE** that prerequisite actions are completed.

Waste Handling Technician

[2] **OBTAIN** a DOT Type 7A certified overpack drum and lid assembly.

[3] **RECORD** the following overpack drum information on Attachment 1, WCRRF Overpack Drum Assembly Preparation Data Sheet.
- Purchase Order Number
- Lot Number
- Manufacture Date

[4] **REMOVE** and **DISCARD** the 3/4 in. bung from the overpack drum lid.

[5] **REMOVE** the overpack drum lid.

[6] **VISUALLY INSPECT** the overpack drum, lid, gasket, closure ring, bolt and nut, chine, rolling hoops, and paint for holes or other damage that may impact the integrity of the overpack drum.

[7] **IF** the overpack drum or drum components fail the visual inspection,
THEN:

[A] **IDENTIFY** (e.g., tag or mark) the failed item to indicate that the item is defective.

[B] **SEGREGATE** defective item to prevent re-use.

[C] **NOTIFY** supervision of the discrepancy.

5. PERFORMANCE—OVERPACK DRUM ASSEMBLY PREPARATION (continued)

NOTE 1 *A Quality Assurance (QA) representative may be contacted for assistance with the NCR process.*

NOTE 2 *The NCR may be initiated at an operationally convenient time.*

Supervisor

[D] **ENSURE** that an NCR is initiated in accordance with P330-6, as required.

Waste Handling Technician

[E] **GO** to Step 5.[2].

[8] **RECORD** the torque wrench and WIPP-approved filtered vent information on Attachment 1.

[9] **CHECK** (√) YES or NO on Attachment 4 to indicate whether the torque value is within the calibrated range of the torque wrench, and **SIGN** and **DATE** on Attachment 1.

[10] **IF** NO was checked (√) in the previous step,
THEN NOTIFY supervision that the torque value is <u>not</u> within the calibrated range of the torque wrench, and **REQUEST** further direction.

NOTE *Appendix 1, Nuclear Filter Technology Filtered Vent Seals, illustrates the Skolnik drum Rieke VG1 and VG2 filter configuration.*

[11] **RECORD** Name, Signature, Z# and Date on Attachment 1.

[12] **ENSURE** that a WIPP-approved filtered vent to be installed in the drum is equipped with the appropriate seal (gasket or O-ring) as follows:

- Skolnik drum with a Rieke VG1 3/4 in. bung base – Flat, Neoprene Seal
- Skolnik drum with a Rieke VG2 3/4 in. bung base – O-ring Seal

WARNING

Due to skin allergen hazard, nitrile, pylox, or trionic gloves SHALL be worn when applying Loctite®.

[13] **APPLY** a thread-locker (e.g., Loctite® 271 or Loctite® 680) to the first three threads of a WIPP-approved filtered vent.

5. PERFORMANCE—OVERPACK DRUM ASSEMBLY PREPARATION (continued)

[14] **HAND SCREW** the WIPP-approved filtered vent into the 3/4 in. bung hole.

[15] **TORQUE** the WIPP-approved filtered vent to a nominal value of 120 in-lb (96 to 144 in-lb), and **DOCUMENT** the WIPP-approved filtered vent torque value on Attachment 1.

[16] **IF** stripped WIPP-approved filtered vent threads are encountered,
THEN:

[A] **REMOVE** the overpack drum lid.

[B] **IDENTIFY** (e.g., tag or mark) the overpack drum lid indicating that the overpack drum lid is defective.

[C] **SEGREGATE** the overpack drum lid to prevent re-use.

[D] **NOTIFY** supervision of the discrepancy.

NOTE 1 *A Quality Assurance (QA) representative may be contacted for assistance with the NCR process.*

NOTE 2 *The NCR may be initiated at an operationally convenient time.*

Supervisor

[E] **ENSURE** that an NCR is initiated in accordance with P330-6, as required.

Waste Handling Technician

[F] **OBTAIN** a new overpack drum lid.

[G] **GO** to Step 5.[6].

[17] **PLACE** the overpack drum lid and drum closure ring on the overpack drum, and **TIGHTEN** the closure ring bolt sufficiently to hold the overpack drum lid in place.

[18] **IF** the overpack drum lid is equipped with a 2-inch bung,
THEN TORQUE the 2-inch bung in accordance with Table 5-1, 2-in. Bung Torque Specifications, and **DOCUMENT** the torque value on Attachment 1.

5. PERFORMANCE—OVERPACK DRUM ASSEMBLY PREPARATION (continued)

TABLE 5-1, 2-in. BUNG TORQUE SPECIFICATIONS

Myers									
	Type I – Tri-Sure Octagon Base, Round Head Plug inserted in Tri-Sure Flange						Type II – Rieke Serrated Base, Hexagon Head Plug		
Plug Mat'l	Steel	Steel	Poly	Poly	Poly/Nylon	Poly/Nylon	Steel	Steel	Nylon
Gasket Mat'l	Buna-N and EPDM	Poly	None (Integral)	Buna-N and EPDM	Poly	Buna-N and EPDM	Buna-N and EPT	Poly	Poly and EPT
2"	20 ft-lb	30 ft-lb	12 ft-lb	15 ft-lb	30 ft-lb	20 ft-lb	30 ft-lb	40 ft-lb	20 ft-lb

Skolnik							
Plug Type	Tri-Sure			Rieke (plastic)	Rieke (steel)		Nuc-Fil Filters
Gasket Mat'l	Buna	Poly or Teflon	PE/PP (composite drums)	---	Poly	All others	
2"	20 ft-lb	30 ft-lb	10 ft-lb	20 ft-lb	40 ft-lb	30 ft-lb	---

NOTE 1 *The TRU DRUM PREPARATION task on the WCATS mobile device may be performed out of sequence.*

NOTE 2 *The following step may be performed at a later time when the prepared drum is to be loaded.*

[19] **IF** the prepared drum is to be labeled,
THEN:

[A] **ENSURE** that a TRU DRUM PREPARATION task has been completed for the drum using a WCATS mobile scanner.

[B] **ATTACH** one drum identification (ID) barcode label (Shorty label) to the left of the drum seam approximately 6 in. from the drum bottom.

[C] **ATTACH** one drum ID barcode label (Shorty label) to the center of the drum lid.

[D] **ATTACH** three drum ID barcode labels (Shorty labels) approximately 6 in. from the bottom of the drum, one immediately adjacent to the drum seam and the other two approximately 120° apart.

[20] **IF** the overpack drum assembly is to be used later,
THEN GO to Section 8.1, Disposition

IPC-1

6. PERFORMANCE—UNLOADING SWB OR OVERPACK DRUM

This section is a stand-alone section and may be performed independently of or in conjunction with other Instruction sections.

NOTE *Radiological surveys may be performed as determined necessary [e.g., by an RP representative (e.g., RCT)] any time during the performance of this procedure.*

Supervisor with Waste Handling Technician

[1] **ENSURE** that all prerequisites are complete.

IPC-1

[2] **STAGE** the SWB or overpack drum in an area of Building TA-50-69 to permit the removal of the waste drum.

NOTE *A qualified crane operator is required to operate the lifting device (e.g., forklift or gantry crane) and to be the PIC when lifting a DEGRADED/LOSS OF INTEGRITY drum.*

[3] **PERFORM** the following sections, as applicable:

- Section 6.1, Unloading SWB
- Section 6.2, Unloading Overpack Drum

IPC-1

6.1 UNLOADING SWB

Waste Handling Technician

[1] **IF** the lid of an SWB is to be removed,
THEN:

[A] **ATTACH** a 1/4-20 UNC-2A X 0.29-in. long swivel hoist ring or two 6 in. x 9 in magnetic assemblies (150 lb capacity for a 1/8 in. thick lid) to the SWB lid.

6.1 UNLOADING SWB (CONTINUED)

[B] **IF** a 1/4-20 UNC-2A X 0.29-in. long swivel hoist ring was installed,
THEN torque the 1/4-20 UNC-2A X 0.29-in. long swivel hoist ring to approximately 6 ft-lb (72 in-lb) ensuring that full thread engagement is achieved.

[C] **IF** a forklift is to be used to lift the SWB lid,
THEN:

[a] **RIG** a 2 in. x 4 ft sling and shackle or equivalent (capacity greater than or equal to 3,200 lb) to the magnetic assemblies or appropriate rigging equipment (e.g., swivel hoist ring), as required.

[b] **ENSURE** the spreader bar is properly placed and secured on the forklift.

[D] **SECURE** the slings to the hook on the bottom of the spreader bar or the gantry crane hook to the SWB lid rigging equipment (e.g., swivel hoist ring).

[E] **REMOVE** the lid bolts and place in a safe place for reuse at a later time.

WARNING

($) No hotwork may be performed in BUILDING TA-50-69 when INVENTORY is present (SAC 5.10.1.2). Extreme caution must be taken to prevent spark generation by ensuring that power tools (i.e., reciprocating saws and drills) are used at the slowest operating speed settings.

[F] **IF** a stripped Socket Flat Head Cap Screw (SFHCS) is encountered while the SFHCS is being removed,
THEN REMOVE the SFHCS head using tools such as a drill, hacksaw, chisel and hammer, reciprocating saw, as necessary.

[G] **IF** a reciprocating saw or drill is used to remove the SFHCS,
THEN:

[a] **ENSURE** the saw or drill is set at the lowest speed before proceeding to remove the stripped SFHCS.

[b] **IF** at any time during the sawing or drilling operation a spark is generated,
THEN STOP operations immediately and **NOTIFY** the WCRRF Operations Center for guidance and direction.

6.1 UNLOADING SWB (CONTINUED)

WARNING

At no time is any individual permitted to place any portion of the body under a suspended load and overpack drums are <u>not</u> to be moved out from under a suspended load using a foot or hand in order to prevent personnel injury.

[H] **SLOWLY LIFT** and **MOVE** the SWB lid free of the SWB.

[I] **STAGE** the SWB lid in a safe location.

NOTE 1 *Drums that have been overpacked into an SWB as a result of being determined to be a Degraded/Loss of Integrity Drum are to be handled using a Critical Lift in accordance with by P101-25. (AC 5.10.3.1).*

NOTE 2 *The unloading of an overpack drum from an SWB and subsequent unloading of the 55-gal drum from the overpack drum should be performed as one continuous activity in order to place the waste material in the safest condition (55-gal drum wrapped in a protective covering) in the shortest amount of time.*

IPC-1

[4] **IF** unloading an overpack drum from the SWB,
THEN:

[A] **ENSURE** that drum bracing or dunnage drum has been repositioned/removed to allow access to the overpack drum (waste drum or dunnage drum), as necessary.

[B] **DETERMINE** whether an unobstructed WIPP-approved filter vent is installed in the overpack drum lid.

[C] **IF** a WIPP-approved filter vent is NOT installed on the overpack drum lid,
THEN:

[a] **REPOSITION/REPLACE** the bracing or dunnage drum.

[b] **PLACE** the lid on the SWB.

[c] **CLOSE** the SWB in accordance with EP-WCRR-WO-DOP-1200.

[d] **NOTIFY** the WCRRF Operations Center of the discrepancy.

6.1 UNLOADING SWB (CONTINUED)

[e] **EXIT** this procedure.

NOTE 1 *The 3 in. x 10 ft cinch strap or equivalent should be positioned near the top of the drum, just below the upper chime.*

NOTE 2 *The preliminary visual inspection only inspects the portion of the container that is visible to the operator. A thorough inspection of the outside of the container is included when lifting the container out of the SWB.*

IPC-1

[D] **PERFORM** a preliminary visual inspection of the overpack container(s) for damage that may impact the integrity of the drum (e.g., significant rust or corrosion, split seams, obvious holes, or broken welds)

[E] **IF** the overpack drum fails the preliminary inspection,
THEN:

[A] **SUSPEND** the evolution.

[B] **NOTIFY** supervision for direction and guidance.

IPC-1

[F] **ENSURE** that one 3 in. x 10 ft cinch strap or equivalent is properly positioned around the overpack drum.

[G] **IF** unloading the SWB using a forklift,
THEN ENSURE that a spreader bar is properly placed and secured on the forklift.

[H] **ENSURE** that the lifting device (e.g., forklift or gantry crane**)** is positioned, and **SECURE** the 3 in. x 10 ft cinch strap or equivalent to the hook on the spreader bar or gantry crane, as applicable.

WARNING

At no time is any individual permitted to place any portion of the body under a suspended load and overpack drums are <u>not</u> to be moved out from under a suspended load using a foot or hand in order to prevent personnel injury.

[I] **SLOWLY RAISE** the lifting device (e.g., forklift or gantry crane**)** until the 3 in. x 10 ft cinch strap or equivalent becomes tight.

6.1 UNLOADING SWB (CONTINUED)

NOTE *Steps 6.1[4][J] and 6.1[4][K] are performed concurrently.*

[J] **($) SLOWLY RAISE** the waste drum ensuring that the waste drum is not raised greater than 4 ft above the ground. (SAC 5.10.2.2)

WARNING

To avoid pinch points, the drum SHALL be lowered back into the SWB before making adjustments to the cinch strap.

[K] **VISUALLY INSPECT** the drum for damage that may impact the integrity of the drum (e.g., significant rust or corrosion, split seams, obvious holes, or broken welds).

[L] **IF** the drum fails the visual inspection,
THEN:

[a] **PLACE** the drum back in the SWB.

[b] **NOTIFY** SOS for guidance and direction.

IPC-1

[M] **SLOWLY LIFT** the lifting device (e.g., forklift or gantry crane**)**, and **MANEUVER** the lifting device (e.g., forklift or gantry crane**)** and cinch strap as necessary to **ERECT** the overpack drum inside the SWB.

[N] **LOWER** the lifting device (e.g., forklift or gantry crane**)**, and **REMOVE** the 3 in. x 10 ft cinch strap or equivalent from the spreader bar or gantry crane, as applicable.

[5] **ATTACH** the drum lift fixture (sling or drum handler as appropriate) to the bottom of the spreader bar or gantry crane, as applicable.

[6] **ATTACH** the drum lift fixture to the top of the waste drum.

6.1 UNLOADING SWB (CONTINUED)

WARNINGS

1. **Pinch points exist during drum unloading evolutions. Keep hands and fingers clear during drum unloading evolutions to prevent injury. Lower the waste container before making adjustments to the drum lift fixture.**

2. **Severe personnel injury or death may occur from placing parts of the body beneath a suspended load. At no time is an individual permitted to place any portion of their body beneath a suspended load.**

[7] **SLOWLY RAISE** the lifting device (e.g., forklift or gantry crane) until the drum lift fixture becomes tight.

[8] **($) SLOWLY RAISE** the waste drum ensuring the drum is not raised greater than 4 ft above the ground. (SAC 5.10.2.2)

NOTE *Steps 6.1[9] and 6.1[10] are performed concurrently.*

[9] **WHEN** the drum has cleared the sides of the SWB,
THEN SLOWLY MOVE the drum or SWB so that the drum is free of the SWB.

IPC-1

[10] **IF** lifting a 55-gal drum,
THEN:

[A] **VISUALLY INSPECT** the drum for damage that may impact the integrity of the drum (e.g., significant rust or corrosion, split seams, obvious holes, or broken welds).

[B] **IF** the drum fails the visual inspection,
THEN:

[a] **($) WRAP** the drum with a protective covering (e.g., plastic and RP-approved tape). (ISI 6.3.6)

[b] **PLACE** the bag-off bag around the drum.

[c] **WRAP** vinyl around the lower section of the drum over the bag-off bag.

[d] **LOWER** the drum back to the drum dolly.

6.1 UNLOADING SWB (CONTINUED)

[11] **SLOWLY LOWER** the waste drum onto the ground or a drum dolly.

[12] **WHEN** the drum reaches the ground or drum dolly,
THEN continue to **LOWER** the lifting device (e.g., forklift or gantry crane**)** to allow removal of the drum lift fixture.

[13] **REMOVE** the drum lift fixture from the drum.

IPC-1

[14] **INSPECT** the outside of the 55-gal or overpack drum and drum lid ring for burrs using cheesecloth.

[15] **IF** burrs are detected,
THEN COVER with vinyl tape.

[16] **IF** additional waste drums are to be removed from the SWB,
THEN GO to Step 6.1[2].

[17] **ENSURE** that WCATS has been updated with the waste container configuration information, as applicable.

IPC-1

6.2 Unloading Overpack Drum

NOTE *Radiological surveys may be performed as determined necessary [e.g., by an RP representative (e.g., RCT)] any time during the performance of this procedure.*

Waste Handling Technician

IPC-1

[1] **ENSURE** that the lid has been removed from the overpack drum.

[2] **DETERMINE** whether an unobstructed WIPP-approved filtered vent is installed in the 55-gal inner drum.

[C] **IF** a WIPP-approved filtered vent is **NOT** installed in the 55-gal drum lid, **THEN:**

IPC-1

[a] **PLACE** the lid back on the overpack drum.

[b] **CLOSE** the overpack drum in accordance with Section 7, Steps 7.[19] through 7.[32], and **RETURN** to the next step.

[c] **NOTIFY** WCRRF Operations Center of the discrepancy.

[d] **EXIT** this procedure.

[3] **PERFORM** a visual inspection of the inner container to ensure inner container can safely be hoisted.

[4] **IF** the container cannot be safely hoisted, **THEN**

IPC-1

[A] **PLACE** lid back on overpack drum.

[B] **NOTIFY** SOS for guidance and direction.

IPC-1

[5] **IF** unloading an overpack drum using a forklift, **THEN ENSURE** that the spreader bar is properly placed and secured on the forklift.

[6] **ENSURE** that the drum lift fixture (sling or drum handler as appropriate) is properly attached to the hook on the spreader bar or gantry crane, as applicable.

IPC-1

6.2 Unloading Overpack Drum (continued)

[7] **POSITION** an overpack drum sleeve with the bottom cut off (or equivalent confinement) on the outside of the overpack drum and **SEAL** the overpack drum sleeve to the overpack drum (e.g., RP-approved tape).

[8] **ATTACH** the drum lift fixture to the top of the 55-gal drum.

[9] **SLOWLY RAISE** the lifting device (e.g., forklift or gantry crane**)** until the drum lift fixture becomes tight.

IPC-1

WARNING

To avoid pinch points, the drum SHALL be lowered back into the overpack drum before making adjustments to the drum lift fixture.

IPC-1

[10] **POSITION** the overpack drum sleeve on to the outside of the 55-gal drum and **SEAL** the overpack drum sleeve to the 55-gal drum (e.g., RP-approved tape).

[11] **SLOWLY RAISE** the 55-gal drum approximately one foot.

IPC-1

[12] **($) SLOWLY RAISE** the 55-gal drum, while adjusting the overpack drum sleeve as necessary, ensuring that the 55-gal drum is <u>not</u> raised greater than 4 ft above the ground. (SAC 5.10.2.2)

[13] **WHEN** the 55-gal drum is just above the sides of the overpack drum, **THEN STOP RAISING** the 55-gal drum.

[14] **MOVE** the overpack drum out from under the 55-gal drum using a tool to prevent placing any portion of the body under the suspended load, and **INSPECT** the bottom of the 55-gal drum with an inspection mirror.

[15] **VISUALLY INSPECT** the drum for damage that may impact the integrity of the drum (e.g., significant rust or corrosion, split seams, obvious holes, or broken welds).

IPC-1

6.2 Unloading Overpack Drum (continued)

[16] **IF** the drum fails the visual inspection,
THEN:

[A] **($) WRAP** the drum with a protective covering (e.g., plastic and RP-approved tape). (ISI 6.3.6)

[B] **PLACE** the bag-off bag around the drum.

[C] **WRAP** vinyl around the lower section of the drum over the bag-off bag.

[D] **LOWER** the drum back to the drum dolly.

[17] **IF** the 55-gal drum is contained in a secondary containment (e.g., drum bag),
AND there is indication that the secondary containment has collected liquid from the 55-gal drum,
THEN:

[A] **ENSURE** that the liquid collected inside of the secondary containment is positioned such that the liquid will not be released as the 55-gal drum is lowered to a stable surface (e.g., taping the bottom of the drum with duct tape and yellow vinyl tape).

[B] **SLOWLY LOWER** the 55-gal drum to a stable surface (e.g., floor) ensuring that the liquid collected inside of the secondary containment is not released.

[C] **PAD** the Versa lift grabbers with a layer of protection (e.g., rubber matting) to prevent tearing the 55-gal drum secondary containment.

[D] **PLACE** an adequate amount of absorbent and a closed cutting tool (e.g., knife) and Khemwipes® or equivalent inside of an inspected filtered drum bag.

[E] **($) SLOWLY RAISE** the 55-gal drum to allow a sleeve to be placed over the 55-gal drum ensuring that the 55-gal drum is not raised greater than 4 ft above the ground. (SAC 5.10.2.2)

IPC-1

6.2 Unloading Overpack Drum (continued)

WARNING

At no time is any individual permitted to place any portion of the body under a suspended load and overpack drums are <u>not</u> to be moved out from under a suspended load using a foot or hand in order to prevent personnel injury.

CAUTION

Placing the drum bag up the side of the 55-gal drum above the lower rolling hoop may interfere with the operation of the WCG drum lift.

NOTE *It will take two Waste Handling Technicians to perform the following step.*

[F] **PLACE** the prepared drum bag over the bottom of the suspended 55-gal drum and up the side of the 55-gal drum approximately 8 in. from the bottom of the 55-gal drum.

[G] **TAPE** the top of the drum bag to the 55-gal drum using yellow vinyl tape.

[H] **ATTACH** a piece of banding approximately 2 in. above the 55-gal drum bottom.

WARNING

1. **Sharp objects SHALL be covered when <u>not</u> in use to prevent personnel injuries.**
2. **Cut/puncture resistant gloves SHALL be worn and cut away from the body to prevent personnel injury.**

[I] **BREACH** the inner 55-gal drum secondary containment and allow the liquid to completely drain into the absorbent, and **COLLECT** any loose debris from the outside of the 55-gal drum.

[J] **ENSURE** that the blade of the cutting tool (e.g., utility knife) has been covered (e.g., utility knife blade retracted).

[K] **BAG-OFF** the absorbed liquid and debris from the 55-gal drum using operational experience and RCT guidance.

IPC-1

6.2 Unloading Overpack Drum (continued)

NOTE *Absorbed liquid and debris is to be added to a daughter drum of the parent drum (55-gal drum) in order to ensure that the contents of the 55-gal drum remain together.*

[L] **PLACE** the bagged off absorbed liquid and debris on the lid of the 55-gal drum.

[M] **PREPARE** the 55-gal drum (parent drum) to be bagged onto the WCG, as necessary.

[N] **EXIT** this section of this procedure.

[18] **IF** the 55-gal drum inspection results prevent the 55-gal drum from being processed, **THEN:**

IPC-1

[A] **PLACE** the 55-gal drum into a DOT Type 7A overpack drum and **PLACE** the lid on the overpack drum.

[B] **NOTIFY** supervision and the WCRRF Operations Center of the discrepancy and **REQUEST** the applicable action.

NOTE *Based on radiological conditions and the condition of the drum, the bag sleeve may be left on the drum as a layer of confinement.*

[19] **IF** the 55-gal drum appears to be intact and with concurrence from RCTs, **THEN REMOVE** any bag sleeve seal (e.g., RP-approved tape) and **SLOWLY LOWER** the bag sleeve off of the 55-gal drum while performing radiological survey as necessary.

[20] **IF** the 55-gal drum was removed using a gantry crane, **THEN GO** to Step 6.3[1].

[21] **LOWER** the 55-gal drum onto a drum dolly.

[22] **LOWER** the lift fixture (sling or drum handler as appropriate) as necessary to allow removal of drum lift fixture.

[23] **REMOVE** the drum lift fixture from the 55-gal drum.

IPC-1

[24] **INSPECT** the outside of the 55-gal drum and drum lid ring for burrs using cheesecloth.

IPC-1

6.2 Unloading Overpack Drum (continued)

[25] **IF** burrs are detected,
THEN COVER with vinyl tape.

NOTE *Drums unloaded **SHALL** be prepared in accordance with Section 6.3, Parent 55-Gal Drum Preparation, within the shift that the drums are unloaded or as directed by an RCT.*

[26] **IF** additional drums are to be unloaded,
THEN GO TO Step 6.2[2].

[27] **ENSURE** that WCATS has been updated with the waste container configuration information, as applicable.

6.3 Parent 55-Gal Drum Preparation

NOTE *Steps 6.3[1] through 6.3[3] may be performed at a time that is operationally convenient to prepare parent drum bag-off bags.*

Waste Handling Technician

[1] **OBTAIN** one of the following:
- An unfiltered bag-off bag
- Filtered bag-off bag with tape placed over the inside and outside filter openings.

[2] **INSPECT** the bag-off bag for damage or cuts by inflating the bag, sealing with hand, and examining by sight, sound, and feel.

[3] **IF** the bag-off bag is damaged or cut,
THEN REJECT any bag that is damaged or cut, and **GO** to Step 6.3[1].

[4] **IF** a drum grabber and forklift are to be used,
THEN:

[A] **ENSURE** that a drum grabber is properly placed on the forklift.

[B] **POSITION** the drum grabber to grab the drum just below the upper rolling hoop.

[C] **ENSURE** that the drum is secured by the drum grabber.

[5] **($) RAISE** the 55-gal drum to desired height for prepping, not to exceed 4 ft.
(SAC 5.10.2.2)

[6] **PLACE** vinyl around the bottom rim of the 55-gal drum.

[7] **PLACE** the bag-off bag around the 55-gal drum.

[8] **WRAP** vinyl around the lower section of the 55-gal drum over the bag-off bag.

[9] **LOWER** the 55-gal drum to the drum dolly.

NOTE *Leave enough room between the tape and the drum bolt ring so the ring can be removed easily without damaging the bag.*

[10] **TAPE** lid ring bolt to prevent tears and cuts of unfiltered bag-off bag.

6.3 Parent 55-Gal Drum Preparation (continued)

[11] **WRAP** vinyl around the entire 55-gal drum so that the bag-off bag is tightly bound from the bottom to near the top.

[12] **PLACE** duct tape around the top of the 55-gal drum chime.

[13] **IF** banding material is to be place around the 55-gal drum chime,
THEN:

[A] **PLACE** banding material around the upper 55-gal drum chime.

[B] **TIGHTEN** the banding material, and **BUCKLE** the banding material with banding tools.

[C] **COVER** the buckle with duct tape to prevent tears.

[14] **ROLL DOWN** the remaining bag-off bag around the 55-gal drum.

[15] **($) CHECK** (√) SAT or UNSAT on Attachment 2, WCRRF Parent 55-Gal Drum Preparation Data Sheet, to indicate the completion of the 55-gal drum preparation (wrapped in protective covering). (ISI 6.3.6)

[16] **RECORD** the following platform scale information on Attachment 2:
- Platform scale serial number
- Platform scale calibration expiration date

[17] **IF** the platform scale has exceeded the calibration expiration date,
THEN:

[A] **TAG** the platform scale Out-of-Service.

[B] **NOTIFY** the WCRRF Operations Center and supervision for the applicable actions.

[18] **WEIGH** the prepared parent 55-gal drum, and **RECORD** the prepared parent 55-gal drum weight (lb) on Attachment 2.

[19] **($) DETERMINE** whether the prepared parent 55-gal drum weight is less than 624 lb, and **CHECK** (√) SAT or UNSAT on Attachment 2. (SR 4.5.1)

6.3 PARENT 55-GAL DRUM PREPARATION (CONTINUED)

[20] **IF** the weight of the 55-gal drum (parent drum) is greater than or equal to 624 lb, **THEN NOTIFY** the WCRRF Operations Center and supervision for the applicable actions.

[21] **LABEL** the prepared parent 55-gal drum in accordance with EP-DIV-DOP-20043, LTP TRU Waste Container Labeling, as necessary and **RECORD** the prepared parent 55-gal drum number on Attachment 2.

[22] **STAGE** the prepared parent 55-gal drum for loading onto the WCG.

IPC-1

[23] **REQUEST** RCTs perform radiological surveys for the empty SWB or overpack drum, and lifting device (e.g., forklift or gantry crane), as necessary.

[24] **IF** radiological contamination is detected during evolution, **THEN FOLLOW** the direction of the RCT and RWP.

[25] **IF** an SWB was unloaded **THEN:**

[A] **IF** the SWB was unloaded and the gasket is degraded or damaged, **THEN CLOSE** the SWB in accordance with EP-WCRR-WO-DOP-1200.

[B] **WIPE** the gasket sealing surface of the SWB body and lid to remove loose debris.

[C] **IF** rigging device has been removed, **THEN:**

[a] **ATTACH** a 1/4-20 UNC-2A X 0.29-in. long swivel hoist ring <u>or</u> two 6 in. x 9 in magnetic assemblies (150 lb capacity for a 1/8 in. thick lid) to the SWB lid.

[b] **IF** a 1/4-20 UNC-2A X 0.29-in. long swivel hoist ring was installed, **THEN** torque the 1/4-20 UNC-2A X 0.29-in. long swivel hoist ring to approximately 6 ft-lb (72 in-lb) ensuring that full thread engagement is achieved.

6.3 PARENT 55-GAL DRUM PREPARATION (CONTINUED)

[D] **IF** a forklift is to be used to lift the SWB lid,
THEN:

[a] **RIG** a 2 in. x 4 ft sling and shackle or equivalent (capacity greater than or equal to 3,200 lb) to the magnetic assemblies or appropriate rigging equipment (e.g., swivel hoist ring), as required.

[b] **ENSURE** the spreader bar is properly placed and secured on the forklift.

[E] **SECURE** the slings to the hook on the bottom of the spreader bar or the gantry crane hook to the SWB lid rigging equipment (e.g., swivel hoist ring).

WARNING

At no time is any individual permitted to place any portion of the body under a suspended load and overpack drums are <u>not</u> to be moved out from under a suspended load using a foot or hand in order to prevent personnel injury.

[F] **SLOWLY LIFT** and **MOVE** the SWB lid to the SWB.

[G] **LIFT** the SWB lid above the SWB and center the SWB lid over the SWB body shell flange.

WARNING

1. **Pinch points will be present between the lid and the body shell flange. Keep hands and fingers clear during lid installation to prevent injury.**

2. **Severe personnel injury or death may occur from placing parts of the body beneath a suspended load. At no time is an individual permitted to place any portion of their body beneath a suspended load.**

[H] **SLOWLY LOWER** the SWB lid onto the SWB body shell flange ensuring that the gasket is <u>not</u> damaged during the lowering of the SWB lid.

[I] **INSTALL** and **HAND TIGHTEN** the SFHCSs.

6.3 PARENT 55-GAL DRUM PREPARATION (CONTINUED)

WARNING

Drilling evolutions can produce sharp edges and burrs. Wear leather gloves and safety glasses with side shields when drilling.

[J] **TORQUE** the lid bolts in accordance with the manufacturer specifications Table 5.1.

[K] **IF** a stripped SFHCS is encountered while the SFHCSs are being installed, **THEN:**

[a] **DRILL** the head off of the stripped SFHCS using 5/16 in. drill bit.

[b] **REMOVE** the remaining SFHCS.

[c] **SLOWLY LIFT** and **MOVE** the SWB lid to a safe location.

[d] **REMOVE** the threaded screw stub using a pair of vise grips or equivalent.

[e] **GO** to Step 6.3[25][G].

[26] **REMOVE** the rigging and hoist equipment.

IPC-1

[27] **REMOVE** or **OBLITERATE** unnecessary labels on the SWB or overpack drum, and **ENSURE** that the lid has been placed on the SWB or overpack drum.

[28] **LABEL** the empty SWB or overpack drum with an empty label and LLW label.

[29] **REQUEST** an RCT perform a radiological survey of the SWB or overpack drum and **AFFIX** radioactive labeling.

IPC-1

7. PERFORMANCE—LOADING SWB OR OVERPACK DRUM

This section is a stand-alone section and may be performed independently of or in conjunction with other Instruction sections.

NOTE 1 *Radiological surveys may be performed as determined necessary [e.g., by an RP representative (e.g., RCT)] any time during the performance of this procedure.*

NOTE 2 *The overpack (e.g., 412-PACK) or consolidation (e.g., CONSOLID) task on the WCATS desktop application may be performed in conjunction with the performance of the loading of an SWB.*

Waste Handling Technician

[1] **ENSURE** that the prerequisite actions are completed.

IPC-1

[2] **STAGE** the waste drum to be loaded into an SWB or overpack drum in an area of Building TA-50-69 in order to permit the loading of the waste container and **ENSURE** that a TRU DRUM PREPARATION task has been completed for the overpack waste container using a WCATS mobile device.

[3] **IF** the waste drum is to be loaded into an SWB,
THEN ENSURE that the lid of the SWB has been removed:

[A] **ATTACH** a 1/4-20 UNC-2A X 0.29-in. long swivel hoist ring <u>or</u> two 6 in. x 9 in magnetic assemblies (150 lb capacity for a 1/8 in. thick lid) to the SWB lid.

[B] **IF** a 1/4-20 UNC-2A X 0.29-in. long swivel hoist ring was installed,
THEN torque the 1/4-20 UNC-2A X 0.29-in. long swivel hoist ring to approximately 6 ft-lb (72 in-lb) ensuring that full thread engagement is achieved.

[C] **IF** a forklift is to be used to lift the SWB lid,
THEN:

[a] **RIG** a 2 in. x 4 ft sling and shackle or equivalent (capacity greater than or equal to 3,200 lb) to the magnetic assemblies or appropriate rigging equipment (e.g., swivel hoist ring), as required.

IPC-1

7. PERFORMANCE—LOADING SWB OR OVERPACK DRUM (continued)

[b] **ENSURE** the spreader bar is properly placed and secured on the forklift.

[D] **SECURE** the slings to the hook on the bottom of the spreader bar or the gantry crane hook to the SWB lid rigging equipment (e.g., swivel hoist ring).

WARNING

At no time is any individual permitted to place any portion of the body under a suspended load and overpack drums are <u>not</u> to be moved out from under a suspended load using a foot or hand in order to prevent personnel injury.

[E] **SLOWLY LIFT** and **MOVE** the SWB lid free of the SWB.

[F] **STAGE** the SWB lid in a safe location.

[G] **GO TO** Step 7.[6].

IPC-1

[4] **ENSURE** that the overpack drum lid has been removed.

[5] **IF** an <u>empty</u> 55-gal drum is to be placed into the overpack drum, **THEN:**

[A] **ENSURE** that the drum cradle is located outside of the WCG combustible exclusion zone and that the drum cradle is chocked.

IPC-1

[B] **SECURE** an empty overpack drum to the drum cradle.

[C] **TILT** the empty overpack drum on the drum cradle.

CAUTION

The plastic sleeve SHALL only be used outside of the WCG exclusion zone and is to be counted against the TA-50-69 combustible loading in accordance with LCO 3.4.

IPC-1

[D] **INSERT** the drum sleeve (e.g., hard plastic sheet) a sufficient distance into the empty overpack drum to allow the empty 55-gal drum to be inserted.

IPC-1

7. PERFORMANCE—LOADING SWB OR OVERPACK DRUM (continued)

[E] **POSITION** the empty 55-gal drum in front of the empty overpack drum such that the 55-gal drum locking ring bolt is facing upward when loaded into the empty overpack drum.

IPC-1

WARNING

1. **Two Waste Handling Technicians SHALL be used to lift the empty 55-gal drum into the empty overpack drum in order to prevent personnel injuries from the lifting activity.**

2. **Extreme caution should be exercised when handling and the drum to maintain the integrity fo the plastic sleeve. Failure to comply with this practice could lead to unwanted Radiological contamination.**

IPC-1

[F] **LIFT** and **TILT** the empty 55-gal drum using two Waste Handling Technicians, and **INSERT** the empty 55-gal drum into the empty overpack drum.

[G] **PLACE** the overpack drum in the upright position.

[H] **REMOVE** the drum cradle and sleeve.

[I] **REQUEST** that an RCT perform a radiological survey of the drum sleeve.

[J] **IF** contamination is detected,
THEN FOLLOW RCTs instructions.

[K] **GO** to Step 7.[19].

[6] **ENSURE** that a spreader bar is properly placed and secured on a lifting device (e.g., forklift or gantry crane).

IPC-1

[7] **IF** a radiological contamination barrier (e.g., tape or plastic) has been attached to the waste container to be loaded into an SWB or overpack drum,
THEN ENSURE that the contamination barrier is protected from tearing (e.g., a rubber pad is placed between the point where the lift fixture contacts the waste container) as directed by an RCT.

[8] **ENSURE** that the lifting device (e.g., forklift or gantry crane) is positioned, and **ENSURE** that the drum lift fixture is properly attached to the hook on the spreader bar.

IPC-1

7. PERFORMANCE—LOADING SWB OR OVERPACK DRUM (continued)

[9] **SLOWLY RAISE** the lifting device (e.g., forklift or gantry crane) until the drum lift fixture becomes tight.

WARNINGS

1. **To avoid pinch points the drum SHALL be lowered back onto the floor before making adjustments to the drum lift fixture.**

2. **Severe personnel injury or death may occur from placing parts of the body beneath a suspended load. At no time is an individual permitted to place any portion of their body beneath a suspended load.**

[10] **($) SLOWLY RAISE** the waste drum ensuring that the drum is not raised greater than 4 ft above the ground. (SAC 5.10.2.2)

IPC-1

[11] **WHEN** the waste drum is just above the sides of the SWB or overpack drum,
THEN STOP raising the waste drum.

[12] **MANEUVER** the lifting device (e.g., forklift or gantry crane) and waste drum, as necessary, to position the waste drum over the SWB or overpack drum.

[13] **SLOWLY LOWER** the lifting device (e.g., forklift or gantry crane) until the drum lift fixture becomes loose.

[14] **DETACH** the drum lift fixture from the waste drum.

IPC-1

[15] **IF** an overpack drum was loaded into an SWB,
THEN:

NOTE *The 3 in. x 10 ft cinch strap or equivalent should be positioned near the top of the drum, just below the upper chime.*

IPC-1

[A] **ENSURE** that one 3 in. x 10 ft cinch strap or equivalent is properly positioned around the overpack drum.

[B] **IF** loading the SWB using a forklift,
THEN ENSURE that a spreader bar is properly placed and secured on the forklift.

IPC-1

7. PERFORMANCE—LOADING SWB OR OVERPACK DRUM (continued)

[C] **ENSURE** that the lifting device (e.g., forklift or gantry crane**)** is positioned, and **SECURE** the 3 in. x 10 ft cinch strap or equivalent to the hook on the spreader bar or gantry crane, as applicable.

WARNING

At no time is any individual permitted to place any portion of the body under a suspended load and overpack drums are <u>not</u> to be moved out from under a suspended load using a foot or hand in order to prevent personnel injury.

[D] **SLOWLY RAISE** the lifting device (e.g., forklift or gantry crane**)** until the 3 in. x 10 ft cinch strap or equivalent becomes tight.

[E] **($) SLOWLY RAISE** the waste drum ensuring that the waste drum is <u>not</u> raised greater than 4 ft above the ground. (SAC 5.10.2.2)

WARNING

To avoid pinch points, the drum SHALL be lowered back into the SWB before making adjustments to the cinch strap.

IPC-1

[F] **SLOWLY LIFT** the lifting device (e.g., forklift or gantry crane**)**, and **MANEUVER** the lifting device (e.g., forklift or gantry crane**)** and cinch strap as necessary to **LAY** the overpack drum on its side inside the SWB.

[G] **LOWER** the lifting device (e.g., forklift or gantry crane**)**, and **REMOVE** the 3 in. x 10 ft cinch strap or equivalent from the spreader bar or gantry crane, as applicable.

[16] **IF** the waste drum was placed in an SWB,
AND additional waste drums/dunnage drum are to be loaded into the SWB,
THEN:

[A] **RECORD** the unique identifier of the SWB on Attachment 3, WCRRF SWB Loading Data Sheet.

IPC-1

7. PERFORMANCE—LOADING SWB OR OVERPACK DRUM (continued)

[B] **RECORD** the unique identifier of the waste drum loaded into the SWB and the PE-Ci content of the waste drum on Attachment 3.

[C] **REPEAT** Steps 7.[3] through 7.[16] until all of the waste drums have been loaded into the SWB.

[D] **SUM** and **RECORD** the total PE-Ci value of the SWB on Attachment 3.

[E] **CHECK** (√) SAT or UNSAT on Attachment 3 to indicate whether the total PE-Ci content of the SWB is less than 1,100 PE-Ci.

[F] **CLOSE** the SWB in accordance with EP-WCRR-WO-DOP-1200.

[G] **RECORD** any unusual internal item conditions on Attachment 3.

NOTE *The overpack (e.g., OVERPACK) or consolidation (e.g., WCRR-PACK) task on the WCATS desktop application may be performed in conjunction with the performance of the loading of an SWB.*

[H] **ENSURE** that a new PROCESS task (SELECT File > Task > Process) to overpack (e.g., WCRR-PACK or CONSOLID) has been completed for the SWB using the WCATS desktop application.

[I] **GO** to Step 7.[33].

NOTE *The overpack (e.g., OVERPACK) or consolidation (e.g., WCRR-PACK) task on the WCATS desktop application may be performed in conjunction with the performance of the loading of an overpack drum.*

[17] **ENSURE** that a new PROCESS task (SELECT File > Task > Process) to overpack (e.g., WCRR-PACK or CONSOLID) has been completed for the SWB using the WCATS desktop application.

IPC-1

7. PERFORMANCE—LOADING SWB OR OVERPACK DRUM (continued)

NOTE *Overpack drums assume the same unique identifier number as the drum that is loaded into the overpack drum. A duplicate set (five Shorty labels) Shorty labels must be obtained from the Waste Help Team (wastehelp@lanl.gov) for labeling the overpack drum.*

[18] **RECORD** the overpack drum unique identifier number on Attachment 4, WCRRF Overpack Drum Closure Data Sheet, and a description of any unusual item condition such as that the item is wrapped in plastic in the Comments section on Attachment 4.

[19] **ENSURE** that the overpack drum lid is installed on the overpack drum, ensuring that the WIPP-approved filtered vent is directly in-line with the drum seam.

[20] **ENSURE** that the overpack drum lid gasket is properly fitted in the cover groove.

[21] **ENSURE** that the overpack drum closure ring is installed with closure ring lugs facing downward and the closure ring opening positioned directly in-line with the overpack drum seam.

[22] **IF** closing a Skolnik drum,
THEN ENGAGE bolt and nut and **TIGHTEN** the closure ring bolt until the ring opening edges are within approximately 1/2 in. from each other while **TAPPING** around the closure ring with a rubber hammer or dead-blow mallet.

[23] **IF** closing a Myers drum,
THEN ENGAGE bolt and nut and **TIGHTEN** closure ring bolt while **TAPPING** around the closure ring with a rubber hammer or dead-blow mallet.

[24] **ENSURE** that the torque wrenches to be used are calibrated,
AND DOCUMENT the following on Attachment 4:
- M&TE identification number
- Calibration expiration date
- Torque wrenches range specified on the Calibration Certificate
- Tolerance (+/-)

[25] **CHECK** (√) YES or NO on Attachment 4 to indicate whether the torque value is within the calibrated range of the torque wrench, and **SIGN** and **DATE** on Attachment 4.

[26] **IF** NO was checked (√) in the previous step,
THEN NOTIFY supervision that the torque value is not within the calibrated range of the torque wrench, and **REQUEST** further direction.

IPC-1

7. PERFORMANCE—LOADING SWB OR OVERPACK DRUM (continued)

[27] **TORQUE** the overpack drum closure ring bolt to the following applicable value while **TAPPING** around the closure ring with a rubber hammer or dead-blow mallet, and **RECORD** the actual torque achieved on Attachment 4.

- Skolnik — 55 to 60 ft-lb
- Myers — Greater than or equal to 60 ft-lb

[28] **POSITION** the jam nut against the drum closure ring bolt-head side of the bolt (unthreaded lug).

[29] **TIGHTEN** jam nut snug against the closure ring unthreaded lug.

[30] **DETERMINE** whether the overpack drum closure ring threaded end is touching the jam nut <u>or</u> the drum closure ring ends are touching, and **CHECK** (√) SAT or UNSAT the determination on Attachment 4.

[31] **IF** the overpack drum closure ring threaded end is touching the jam nut,
OR the overpack drum closure ring ends are touching,
THEN:

NOTE *The drum closure ring may be removed from the overpack drum to permit the installation of a drum closure ring that will satisfy the manufacturer's requirements.*

[A] **REMOVE** the overpack drum lid.

[B] **IDENTIFY** (e.g., tag or mark) the overpack drum closure ring indicating that the overpack drum closure ring is defective.

[C] **SEGREGATE** the overpack drum closure ring to prevent reuse.

[D] **NOTIFY** supervision of the discrepancy.

NOTE 1 *A Quality Assurance (QA) representative may be contacted for assistance with the NCR process.*

NOTE 2 *The NCR may be initiated at an operationally convenient time.*

Supervisor

[E] **ENSURE** that an NCR is initiated in accordance with P330-6, Nonconformance Reporting, as required.

IPC-1

7. PERFORMANCE—LOADING SWB OR OVERPACK DRUM (continued)

Waste Handling Technician

[F] **OBTAIN** a new overpack drum closure ring.

[G] **GO** to Step 7.[19].

NOTE *Steps 7.[32] and 7.[33] may be performed out of sequence.*

[32] **ENSURE** that the Waste Management – Services (WM-SVS) group has been notified to prepare a TWSR for the overpack drum, as appropriate, or **INITIATE** a TWSR in WCATS.

IPC-1

NOTE *Overpack drum seam is <u>not</u> to be covered by any labels.*

[33] **ENSURE** that the overpack drum or SWB has been labeled in accordance with EP-DIV-DOP-20043.

[34] **ENSURE** that a radiological survey of the overpack drum is performed by an RCT.

[35] **IF** a waste drum was loaded into an overpack drum,
THEN:

[A] **ENSURE** that a TRU Waste Storage Record Change Form (Form 2177) is initiated.

[B] **RECORD** the following platform scale information on Attachment 4:
- Platform scale serial number
- Platform scale calibration expiration date

[C] **IF** the platform scale has exceeded the calibration expiration date,
THEN:

[A] **TAG** the platform scale Out-of-Service.

[B] **NOTIFY** the WCRRF Operations Center and supervision for the applicable actions.

IPC-1

[D] **WEIGH** the overpack drum, and **RECORD** the overpack drum weight on Attachment 4.

IPC-1

7. PERFORMANCE—LOADING SWB OR OVERPACK DRUM (continued)

[E] **RECORD** the overpack drum gross weight on the overpack drum lid using a permanent marker.

[36] **STAGE** the SWB or overpack drum as directed by supervision.

NOTE *The following step may be performed out of sequence.*

[37] **ENSURE** that the RECEIVING CONTAINER information (e.g., container closure date, time, and other requested information) has been updated in the WCATS desktop application.

8. POST-PERFORMANCE ACTIVITY

8.1 DISPOSITION

Waste Handling Technician

[1] **SIGN** and **DATE** the applicable attachments.

[2] **FORWARD** the applicable attachments to the supervision or designee.

Supervisor

[3] **REVIEW** the applicable attachments for accuracy and completeness.

[4] **IF** any discrepancies are identified with the attachments,
THEN working with the original performer correct the documentation.

[5] **IF** any deficiencies were identified,
THEN INITIATE actions to correct the deficiency [e.g., Facility Service Request (FSR) System], and **DOCUMENT** the actions taken (e.g., FSR Issue Number) in the Comments section of Appendix 1.

[6] **SIGN** and **DATE** the applicable attachments.

IPC-1

[7] **IF** Section 5, Overpack Drum Assembly Preparation, or Section 7, Loading SWB or Overpack Drum, was performed **AND** directed by supervisor,
THEN ATTACH the original Attachment 1 to the waste container.

SOS/SOM or designee

[8] **IF** Section 6.3, Parent 55-Gal Drum Preparation, was performed,
THEN:

[A] **REVIEW** the applicable attachments for accuracy and completeness.

[B] **CHECK** (√) YES or NO to indicate whether the applicable acceptance criteria is satisfied on the applicable attachments.

[C] **IF** the applicable acceptance criteria are **NOT** satisfied,
THEN:

[a] **ENSURE** that the applicable TSR actions have been implemented.

8.**1** **Disposition (continued)**

[b] **ENSURE** that the actions of EP-DIV-AP-13, WDP TSR-Related Operational Limits Actions Compliance Tracking, have been implemented.

[c] **ENSURE** that the SOM and Environment and Waste Management Facility Operations (EWMO) Facility Operations Director (FOD) have been notified of the discrepancy.

[D] **PRINT** and **SIGN** name, **RECORD** Z number and **DATE/TIME** on the applicable attachments.

Supervisor or designee

[9] **ATTACH** the original attachments to the waste container or **ENSURE** that the applicable attachments is forwarded to the appropriate supervisor.

NOTE *Completing a Post-Job Review may be accomplished using the applicable P300 form or online (the preferred method since the institution has access to feedback and lessons learned* http://int.lanl.gov/safety/iwmc/ *[Click on the Submit IWD Part 4 Post-Job Review]).*

[10] **IF** this procedure is categorized as a moderate or high/complex activity and any of the following occur:

- An activity was completed for the first time
- A request was made by anyone involved with the performance of this procedure to perform a post-job review
- An abnormal event occurred
- A revision to an existing procedure was issued and it has been determined by the procedure owner or designee that a Post-Job Review is required

THEN PERFORM a formal Post Job Review (PJR) in accordance with P300.

[11] **IF** the Post-Job Review identified any necessary changes to this procedure, **THEN INITIATE** a revision to this procedure.

8.2 RECORDS PROCESSING

Waste Handling Technician or Supervision

[1] Disposition records in accordance with the following:

IPC-1

Record Identification	Record Type Determination	Protection/Storage Method	Processing Instructions
Appendix 2, Loading/Unloading Degraded Drum P101-25 Attachment B Critical Lift Plan Attachment 1, WCRRF Overpack Drum Assembly Preparation Data Sheet Attachment 2, WCRRF Parent 55-Gal Drum Preparation Data Sheet Attachment 3, WCRRF SWB Loading Data Sheet Attachment 4, WCRRF Overpack Drum Closure Data Sheet	Quality Assurance (QA) Record	Operator **SHALL** implement a reasonable level of protection to prevent loss and degradation. Records should be maintained in a one-hour fire rated metal file cabinet when not in use.	When the records are ready for final disposition, the record is transferred to Records Management in accordance with EP-DIR-AP-10003, Records Management Procedure for ADEP Employees.

9. REFERENCES

ABD-WFM-006, Technical Safety Requirements for Waste Characterization, Reduction, and Repackaging Facility (WCRRF)

DOE/WIPP-02-3122, Transuranic Waste Acceptance Criteria for The Waste Isolation Pilot Plan

EP-DIR-AP-10003, Records Management Procedure for ADEP Employees

EP-DIV-AP-13, WDP TSR-Related Operational Limits Actions Compliance Tracking

EP-DIV-AP-0112, EWMO Pre-Job Briefings

EP-DIV-DOP-20043, LTP TRU Waste Container Labeling

9. REFERENCES (continued)

EP-DIV-DOP-20086, EWMO Division Forklift and Drum Handling Equipment Operations

EP-DIV-POLICY-20059, EWMO Health and Safety Policy—Manual Movement

EP-WCRR-WO-DOP-1200, Preparing and Closing Standard Waste Boxes

EP-WCRR-WO-DOP-0239, WCRRF Scale Verification

P101-18, Procedure for Pause/Stop Work

P101-21, Chronic Beryllium Disease Prevention Program

P101-25, Cranes, Hoists, Lifting Devices, and Rigging Equipment

P121, Radiation Protection

P330-6, Nonconformance Reporting, as required

APPENDIX 1
Page 1 of 1

NUCLEAR FILTER TECHNOLOGY FILTERED VENT SEALS

Figure 3-1, Skolnik Rieke VG1 3/4 in. Bung Base and Flat, Neoprene Seal

Figure 3-2, Skolnik Rieke VG2 3/4 in. Bung Base and O-ring Seal

APPENDIX 2
Page 1 of 17

IPC-1

Loading/Unloading Degraded Drum P101-25 Attachment B Critical Lift Plan

IPC-1

Table B-1. LANL Critical Lift Plan for Pre-Engineered Production Lift	
Name and company of person preparing this plan: LANS	
Date prepared: 3-31-2014	**Date of lift**:
Critical lift plan expiration date: N/A	**PIC:**
Client/customer: DOE, WIPP	Job #: N/A Project #: N/A
Lift location (building #, address, etc.): TA-50-69 WCRRF	This critical lift plan must be available when and where the lift is performed. How will this requirement be met? Kept on file in the WCRRF Ops Center
A. Critical Lift Determination	
A lift will be determined critical if any of the following conditions are met. Check each answer with either a Yes or a No.	
1. If the load item were damaged or upset would it result in a release into the environment of radioactive or hazardous material exceeding the established permissible environmental limits?	Yes _____ No √
2. Is the load item unique and, if damaged, would it be irreplaceable or not repairable and is it vital to a system, facility or project operation?	Yes _____ No √
3. If the load item was damaged, would the cost to replace or repair the load item, or the delay in operations of having the load item damaged have a negative impact on facility, organizational, or DOE budgets to the extent that it would affect program commitments?	Yes _____ No √
4. If the load were mishandled or dropped, would the event cause any of the above noted consequences to nearby installations or facilities?	Yes _____ No √
5. Does the lift exceed 75% of the manufacturer's rated capacity for the crane, hoist, or mechanized equipment to be used in the lift?	Yes _____ No √
6. Does the load item require special care in handling because of weight, size, asymmetrical shape, undetermined center of gravity, installation tolerances, or other unusual factors?	Yes √ ____ No ____
7. Is the lift an otherwise non-critical lift that must be made in close proximity to critical or expensive items that could be damaged as a result of contact with a hoisted load?	Yes _____ No √
8. Does the lift use two or more cranes, hoists, pieces of mechanized equipment, or a combination of such equipment?	Yes _____ No √
9. Is the lift such that the crane, hoist, or mechanized equipment could at any time come in contact with an energized high voltage power line?	Yes _____ No √
10. Could failure of this lift significantly impact the confidence of LANL customers or sponsors in the ability of LANL to safely execute current or future missions?	Yes _____ No √

APPENDIX 2
Page 2 of 16

Table B-1. LANL Critical Lift Plan (Cont.)

B. Pre-lift Checklist (To be completed prior to each lift)		**D. Load Identification and Information**
__ Crane's monthly and annual inspections current		1. Load condition: ____ New N/A Used N/A
__ Periodic maintenance complete		2. Wt. empty: N/A
__ Crane inspected	__ Site-control in-place	3. Wt. of contents: less than 1000 lb
__ Load test verified	__ Spotters in-place	4. Wt. of lifting beam: N/A _____
__ Operator is qualified	__ Signal person identified	5. Wt. of rigging: N/A _____
__ Riggers are qualified	__ Head-height checked	6. Wt. of excess load material: N/A
__ Rigging proof tested	__ Hoist-height checked	7. Wt. of temporary lift frames: N/A
__ Proof tests verified	__ Signatures procured	8. Total weight: Less than a 1000 lb
__ Rigging inspected	__ Tailing info provided	9. Source of load weight information: N/A_____
__ Annual rig. Insp. current	__ Job briefing held	*(drawings, calculations, dynamometers, etc.)*
__ Work zones identified	__ Team is ready for lift	10. Page on drawing: N/A _____
C. Personnel & Environmental Exposure		11. Revision #: N/A Revision date: N/A
1. Any radiation exposure hazards? Yes		12. Center of gravity has been identified: cc Illustrations Appendix 2 Pages 5 through 9
2. Any chemical exposure hazards? Yes		13. Dimensions: 85-gal: ~27.2" OD x 38.7" or 110-gal: ~31.4" OD X 42.5"
3. Any explosive hazards? No		14. Location and type of lift points are shown Appendix 2 Pages 5 through 9
4. Any exposure hazards to the public? No		**E. Operating Equipment to be Used**
If YES to any of the above, what precautions are needed? 1. Radiological Work Permit 2. IWD		1. Crane mfg. and model: Forklift Toyota # 7FBH20 and 7FBCA 20 _____
		2. Crane S/N: N/A _____ ID-No: N/A_____
5. Is EM&R notification required? No		3. Crane capacity: Forklifts 3250 lb @ 30 LC __
When? N/A		4. Trolley/travel restrictions: N/A _____
Where? N/A		5. Load is what percent of crane capacity? 33 __%
Who? N/A		6. Are any crane, hoist, and equipment load charts required for this lift? Y_√___N____ Are they available to the operator? Y__√__N____

APPENDIX 2
Page 3 of 16

Table B-1. LANL Critical Lift Plan (Cont.)	
F. Rigging	**I. Sketches & Drawings**
1.Hitch type(s): See Illustrations Appendix 2 Pages 5 through 9 2. Sling type: WR____FW __ RS _ Chain ____ (If more than one, write the number of each type on the appropriate line) N/A 3. Number of slings: N/A _____ 4. Size: See Appendix 2 Pages 5 through 9 _____ 5. Shackle sizes: Appendix 2 Pages 5 through 9 6. Shackle rated capacity: 1000 lb _____ tons 7. Sling assembly rated capacity: 1000 lb__ lbs. 8. Shackle secured to load by: See Appendix 2 Pages 5 through 9 9. Shackle & lifting lug mating are OK? N/A 10. Temporary lift frames & weights: N/A 11. Supports & load grillages shown? N/A	In accordance with DOE-STD-1090-2007, *Hoisting and Rigging Standard,* rigging sketches must include--as applicable: 1. Identification and rated capacity of slings, lifting bars, rigging accessories, and below-the-hook lifting devices. Appendix 2 Pages 5 through 9 2. Load-indicating devices. N/A 3. Load vectors (Sling Tension). N/A 4. Lifting points. Appendix 2 Pages 5 through 9 5.Sling angles N/A 6.Boom and swing angles N/A 7. Methods of attachment. Appendix 2 Pages 5 through 9 8. Crane orientations. N/A 9.Other factors affecting equipment capacity, such as load path sketch, key point heights, floor or soil bearing capacity, etc. Appendix 2 Pages 5 through 9 10. Calculate and provide the rated capacity of equipment in the configuration in which it will be used. Appendix 2 Pages 5 through 9 Make sure that these items are included at a minimum.
G. Operating Area	**J. Notes/Things To Do**
1. Are obstructions present? No 2. Are clearance issues present? No 3. Is the lift area populated? No 4. Action items for 1, 2, & 3:	This is a forklift operation that has been determined to require critical lift planning in accordance with WCRRF Technical Safety Requirements
H. Practice Lift Required?	
1.Describe the lift No List is performed on a routine basis 2. Team members involved in the practice lift must be those who will be involved in the actual lift. Are all of those members present?	

APPENDIX 2
Page 4 of 16

Table B-1. LANL Critical Lift Plan (Cont.)

K. Personnel Assignments
List names of all persons involved in the lift and identify their roles (Operator, Signaler, Person In Charge [PIC], etc.). All must be qualified.

Name	Z Number	Role	Training Verified		Comments/Notes
			Y	N	
			Y	N	
			Y	N	
			Y	N	
			Y	N	
			Y	N	
			Y	N	

L. Review and Approval. List all that apply. (Must include the PIC and one other qualified person at a minimum and may include the health and safety rep., Responsible Line Manager [RLM], First Line Manager [FLM], responsible oversight org. rep., quality assurance rep., or others as required)

	Z Number	Organization	Concurrence /Approver's Signature
Responsible Line Manager	125695	LTP-DDP	/s/ John Guadagnoli and Randy Axtell
Crane Program SME	219935	OSH-ISH	/s/ Clay Davis
IHS SME	120199	DSESH-EWMO	/s/ Robert Gardner Winkle
CSE	233208	ES-EWMO	/s/ Shawn West
PIC 1	240092	WCRRF LTP-DDP	/s/ Clayton Mullins
Operator	240092	WCRRF LTP-DDP	/s/ Clayton Mullins
WCRRF SOS	240092	WCRRF LTP-DDP	/s/ Clayton Mullins

M. Pre-lift Meeting

Name	Z Number	Signature	Name	Z Number	Signature

APPENDIX 2
Page 5 of 16

Load Schematic & Rigging Method

IPC-1

Elevation View – Hoisting Overpack Degraded/Loss of Integrity Drum

Overpack

Load Chart

Forklift: Toyota Model No. 7FBH20

Capacity (lb)	Load Center (in)
3250	30
700	60

Load Chart

Forklift: Toyota Model No. 7FBCA20

Capacity (lb)	Load Center (in)
3200	30
1000	60

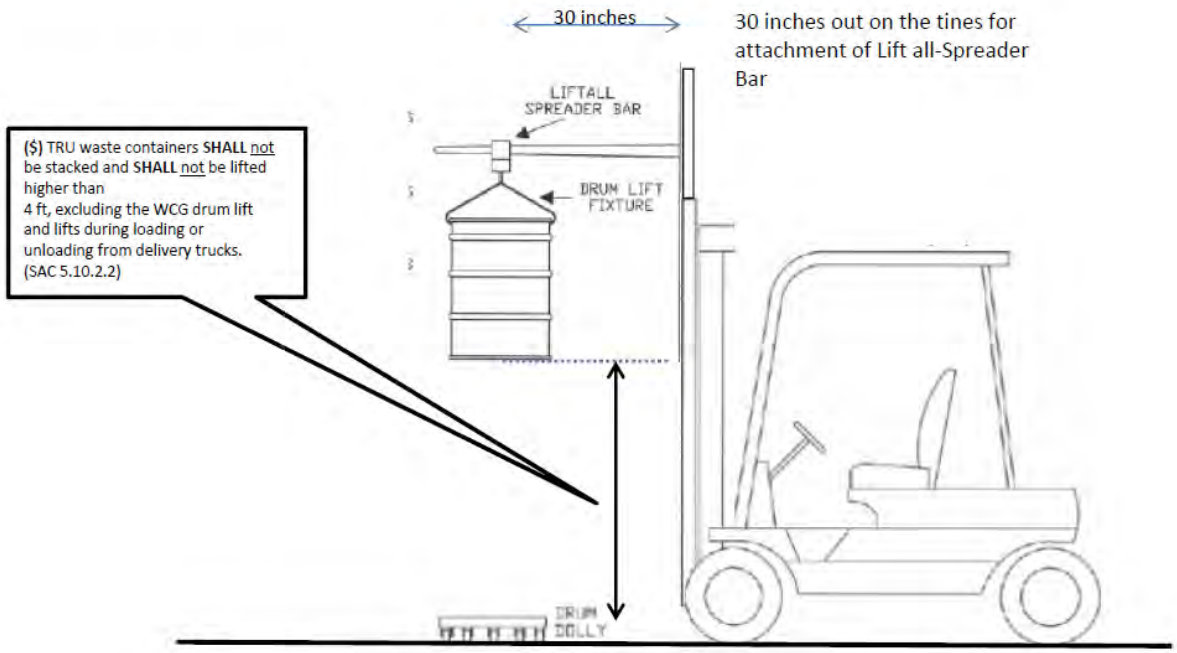

(Maximum Lifting Capacity with attachment listed below)

IPC-1

Lift All Double Fork Beams Model DFBS10 with Drum lift fixture bar hoisting overpack drum

Maximum Lifting Capacity 1000 (lb)

APPENDIX 2
Page 6 of 16

Load Schematic & Rigging Method

IPC-1

Elevation View – Hoisting a 55-Gal Degraded/Loss of Integrity Drum From an Overpack Drum

Load Chart

Forklift: Toyota Model No. 7FBH20

Capacity (lb)	Load Center (in)
3250	30
700	60

Load Chart

Forklift: Toyota Model No. 7FBCA20

Capacity (lb)	Load Center (in)
3200	30
1000	60

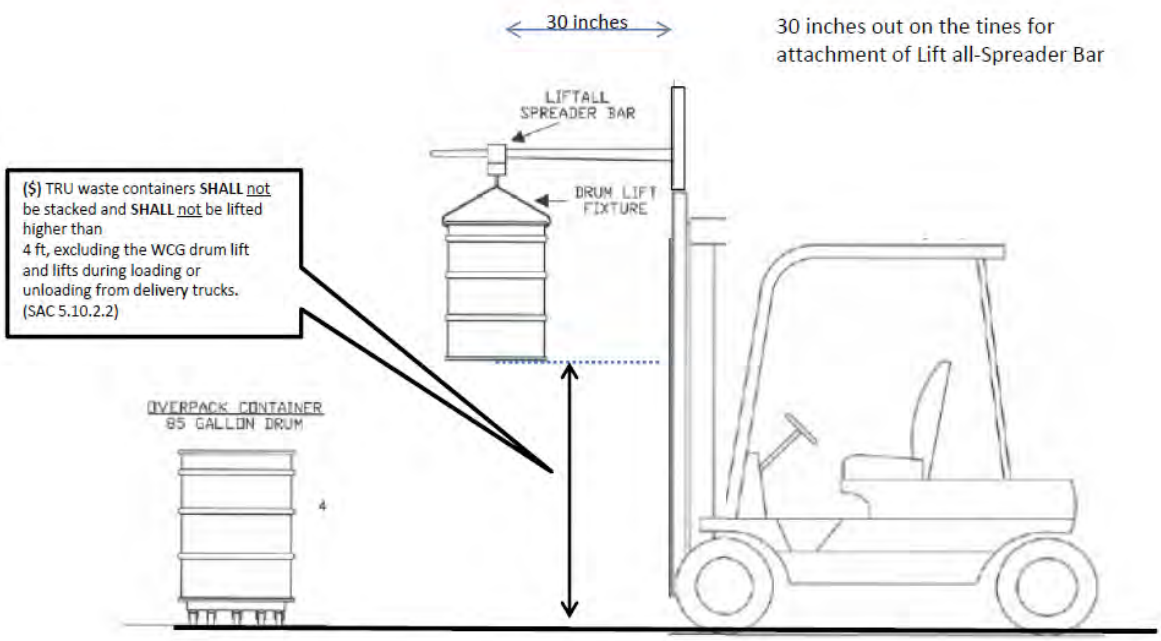

(Maximum Lifting Capacity with attachment listed below)

Lift All Double Fork Beams Model DFBS10 with one the following attachments

- Wesco Drum lift fixture Model SDL-55 & SDL-85
- Cadwell 1HB2-N Sling

Maximum Lifting Capacity 1000 (lb) @ 30” load center

APPENDIX 2
Page 7 of 16

Load Schematic & Rigging Method

Elevation View – Raising a 55-Gal Degraded/Loss of Integrity Drum for Prepping

Load Chart

Forklift: Toyota Model No. 7FBH20

Capacity (lb)	Load Center (in)
3250	30
700	60

Load Chart

Forklift: Toyota Model No. 7FBCA20

Capacity (lb)	Load Center (in)
3200	30
1000	60

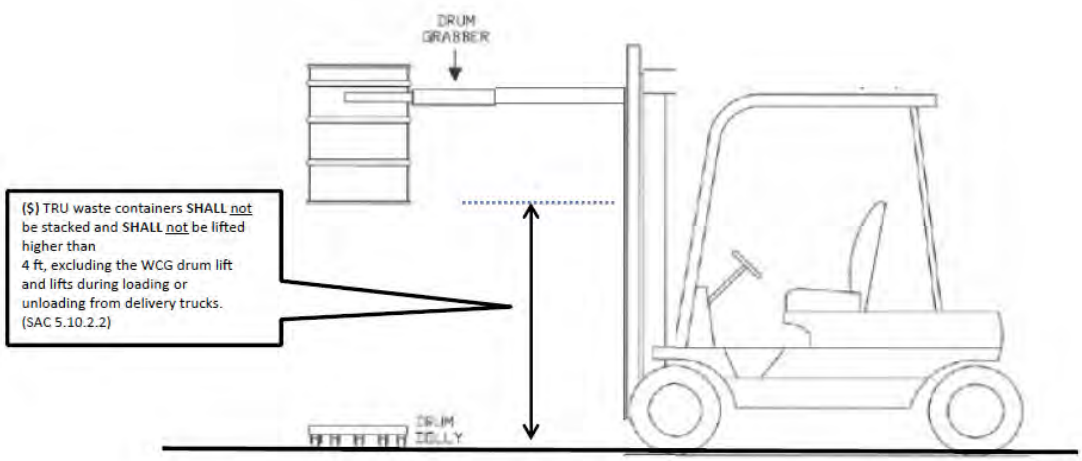

(Maximum Lifting Capacity with attachment listed below)

Drum Grabber Wesco Model DJ-55	Maximum Lifting Capacity 1000 (lb) @ 62” load center
Drum Grabber Valley Craft Model 6145	Maximum Lifting Capacity 1000 (lb) @ 62” load center

APPENDIX 2
Page 8 of 16

Load Schematic & Rigging Method

IPC-1

Elevation View – Hoisting Overpack Degraded/Loss of Integrity Drum

Load Chart

Forklift: Toyota Model No. 7FBH20

Capacity (lb)	Load Center (in)
3250	30
700	60

Load Chart

Forklift: Toyota Model No. 7FBCA20

Capacity (lb)	Load Center (in)
3200	30
1000	60

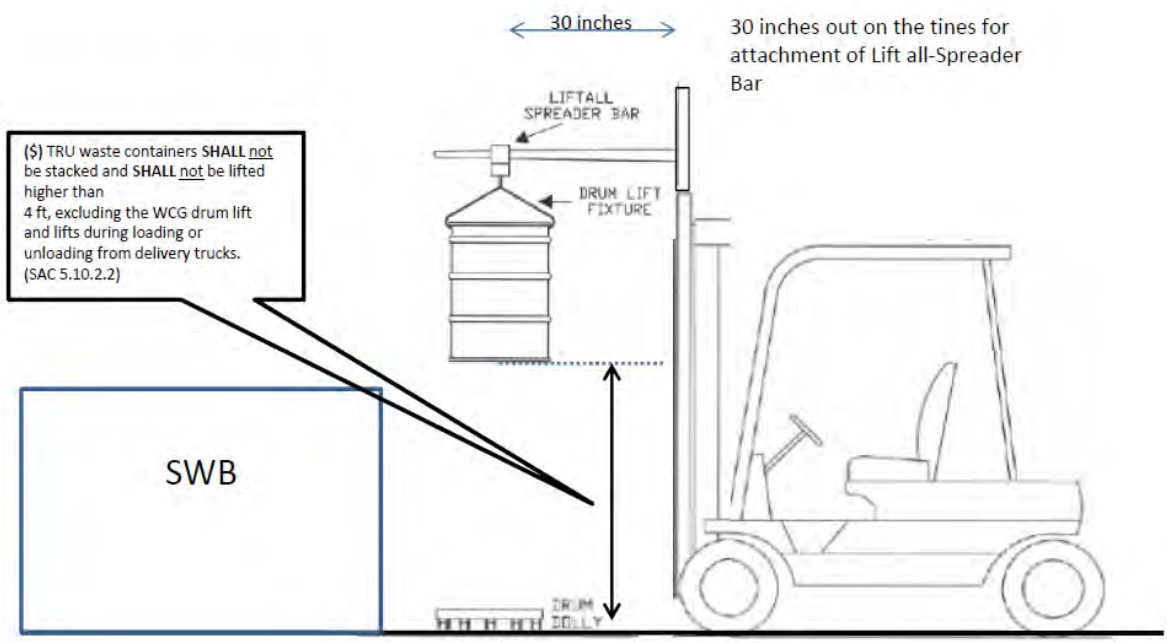

(Maximum Lifting Capacity with attachment listed below)

Lift All Double Fork Beams Model DFBS10 with one the following attachments

- Wesco Drum lift fixture Model SDL-55 & SDL-85
- Cadwell 1HB2-N Sling

Maximum Lifting Capacity 1000 (lb) @ 30” load center

APPENDIX 2
Page 9 of 16

IPC-1

Load Schematic & Rigging Method
Elevation View – Up-Righting Overpack Drum

Load Chart

Forklift: Toyota Model No. 7FBH20

Capacity (lb)	Load Center (in)
3250	30
700	60

Load Chart

Forklift: Toyota Model No. 7FBCA20

Capacity (lb)	Load Center (in)
3200	30
1000	60

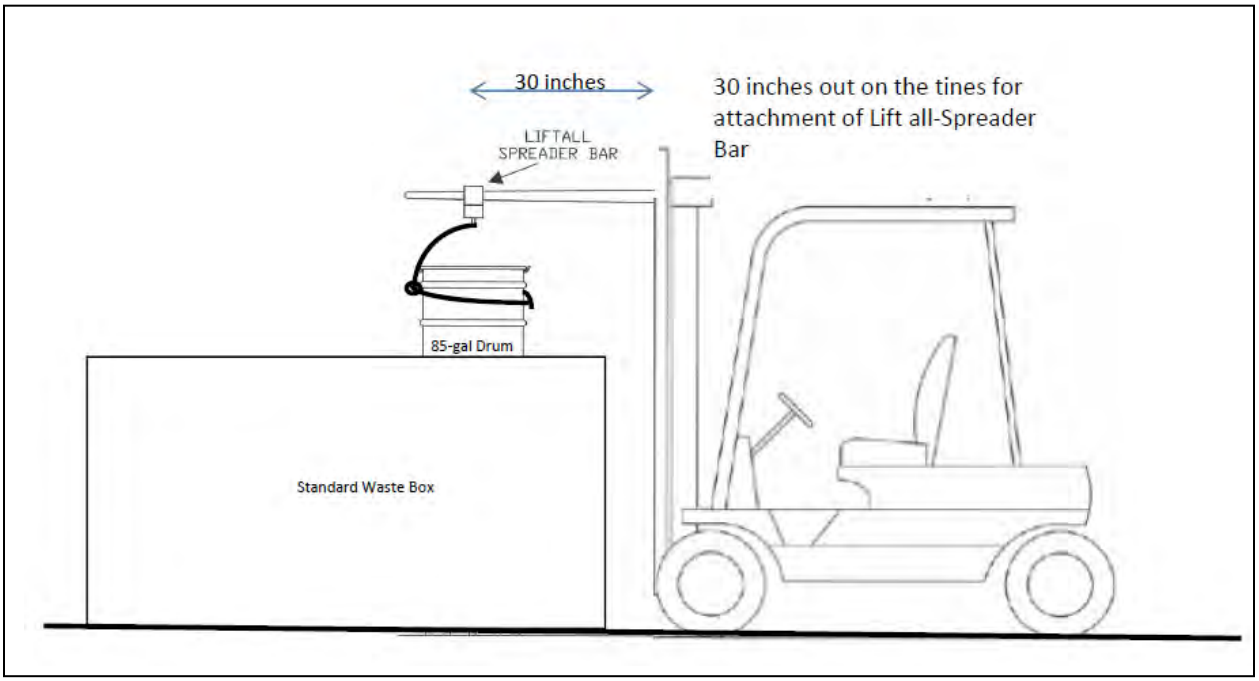

Lift All Double Fork Beams Model DFBS10 with cinch strap hoisting overpack drum

Maximum Lifting Capacity 1000 (lb) @ 30” load center

APPENDIX 2
Page 10 of 16

Load Travel Path/Personnel Placement

See Load Handling Sequence & Procedures

APPENDIX 2
Page 11 of 16

Load Handling Sequence & Procedures

WCRRF FORKLIFT CRITICAL LIFT PLAN FOR DEGRADED/LOSS OF INTEGRITY DRUMS

Purpose

IPC-1

This critical lift plan is used for lifts and forklift movements involving degraded or loss of integrity drums as required by ABD-WFM-006, Technical Safety Requirements (TSRs) for Waste Characterization, Reduction, and Repackaging Facility (WCRRF). This plan will be used to handle and prepare degraded/loss of integrity drums at WCRRF.

General Guidelines/Notes

This critical lift plan has been prepared in accordance with P101-25, Cranes, Hoists, Lifting Devices, and Rigging Equipment.
Drum handling operations involving degraded/loss of integrity drums at WCRRF are performed using approved procedures and lifting equipment specifically designed for this operation.
The following information **SHALL** be reviewed during the critical lift pre-job brief:

1. All lifting and signaling **SHALL** be performed by LANL Qualified Forklift Operators and spotters. Supervision will be by a designated (Certified) Hoisting & Rigging Person-In-Charge (PIC).
2. The electric forklift, drum grabber, all associated lifting and securing hardware, and drums **SHALL** be visually inspected by the operator and/or qualified PIC. Any noted substandard item **SHALL** be cause for suspending operations until an acceptable replacement is acquired.
3. The rigging procedure **SHALL** be followed. Where changes are required due to site conditions, the changes **SHALL** be reviewed and approved by the Hoisting & Rigging PIC.
4. IPC-1 The weight of the load **SHALL** include the 55- or overpack drum and all associated rigging equipment. In no case should the lift exceed 900 lb.
5. The safe working load of the electric forklifts (with attachments and rigging) **SHALL** <u>not</u> be exceeded at any time.
6. Communications between the forklift operators and spotter **SHALL** be clear and unobstructed. The primary system **SHALL** be ANSI hand signals. Secondary system **SHALL** be voice communications.
7. <u>A pre-lift meeting with all responsible persons **SHALL** be held prior to the lifts and each person **SHALL** be assigned specific duties and sign the pre-job sheet.</u>
8. The equipment to be used for this lift will be as applicable: 3 ton electric forklift, drum grabber, spreader bar, shackle, cinch, and drum lift fixtures as appropriate. (Ensure that all equipment has been approved by the forklift manufacturer for use.)
9. <u>A review of the Annual Inspection/Load Test and Daily Inspection of the electric forklift and/or electric drum hauler **SHALL** be conducted by the Hoisting and Rigging PIC.</u>

APPENDIX 2
Page 12 of 16

LOAD HANDLING SEQUENCE & PROCEDURES

Project Notes and Specifications

1. Refer to the enclosed Emergency Action Plan, Hazard Assessment, Key Factors, drawings, and calculations for details of this lift.
2. The primary goal is to perform a safe lift in a timely manner.
3. This lift has been frequently performed with equipment stated in this plan. A preliminary lift is not required but if any discrepancies are noted during the lift, the project **SHALL** be stopped and re-evaluated by the Qualified Operator, and Hoisting & Rigging PIC.
4. The drum and drum handling equipment/rigging **SHALL** be positioned as necessary to facilitate SAFE and efficient operation. Barricades **SHALL** be placed and posted at access corridors around the work area to prevent accidental contact. The work area for assembling the payload **SHALL** be limited to personnel necessary for the operation. (Example: Operator, signal personnel, PIC, and RCTs.)
5. A qualified spotter **SHALL** be designated to control all lift operations and movements around obstructions and to ensure slow, deliberate movements and that care is exercised.
6. When the load is not being raised or moved, the forklift operator **SHALL** set the brake, and have hands-off all controls.
7. The lift requires understanding by the entire crew (riggers, operator, and spotter). This lift plan and the attached drawings and calculations **SHALL** be thoroughly reviewed by the personnel performing the lift and the Critical Lift / Pre-Lift Meeting **SHALL** be conducted prior to the lift to ensure that all personnel are aware of their assigned duties. Each person involved in the lift must attend the meeting and sign the attendance sheet.

Competent Person / Lift Supervisor

The responsible person for this lift is the designated WCRRF Hoisting & Rigging PIC.

Emergency Action Plan

1. In the event that an emergency occurs, all operations **SHALL** be discontinued and any raised load **SHALL** be lowered/secured. For specific casualties, operators will also perform required actions of applicable procedures in the WCRRF Response Manual.
2. Each portion of the lift presents a slightly different set of variables as related to a direction and area where the components may be set down temporarily during an emergency.
3. During the pre-lift meeting the operators, riggers, and spotter are to specifically discuss emergency actions at various points during the lift. If the raised load has to be secured the operator will do so and contact the RCT and Hoisting & Rigging PIC. All non-essential personnel are to be kept clear of the lift area.
4. The operator and rigging personnel will not resume the lift operations without approval from the RCT and the Hoisting & Rigging PIC.
5. In the event of an equipment malfunction, the operation will be shut down and the load will be disconnected from the equipment using another forklift of capable capacity.

APPENDIX 2
Page 13 of 16

LOAD HANDLING SEQUENCE & PROCEDURES

Hazard Assessment

This lift has been reviewed in great detail to ensure a safe lift and minimize hazards. The following items have been identified as unique for this lift.

In no case **SHALL** the material being lifted weigh more than 900 lb. (drum + rigging).

Test Lift — A test lift is not required for this operation.

Travel Path — At the pre-job/lift briefing a spotters **SHALL** be designated to observe the load along the entire travel path (consider slopes and uneven surfaces).

Overhead Instructions — The WCRRF Hoisting & Rigging PIC and rigging crew **SHALL** physically verify the travel path is clear of overhead obstructions before beginning the lift.

Working Around the Load (Cone of Safety) - Absolutely NO ONE **SHALL** be under the load, or while it is being raised, lowered, or moved. The WCRRF Hoisting & Rigging PIC **SHALL** ensure that the area (within 8 feet of the drum) is clear of non-essential personnel. Specific placement of the individual riggers **SHALL** be established during the pre-lift meeting.

Securing the Drum Lifting Assembly — The rigging crew **SHALL** inspect the drum lifting assembly prior to lifting or moving a drum.

Equipment List

Ensure the following equipment is present, has undergone physical inspection, is properly calibrated and is ready to support the critical lift steps:

- Electric Forklift
- Spreader bar rated for 10,000 pounds
- Drum Lift Fixture rated for ≥ 1,000 pounds (sling or drum handler)
- Shackles rated for ≥ 1,000 pounds
- Drum grabber rated for ≥ 1,000 pounds
- 3 in. x 10 ft cinch strap or equivalent rated for ≥ 1,000 pounds

APPENDIX 2
Page 14 of 16

LOAD HANDLING SEQUENCE & PROCEDURES

IPC-1

Work Steps for Up-righting an Overpack Waste Drum inside an SWB with a Forklift

WARNING

IPC-1

In accordance with ABD-WFM-006, TSRs for WCRRF, drums may not be elevated > 4 feet off the ground.

Step 1 Verify the drum weighs < 900 lbs.

IPC-1

Step 2 **ENSURE** that drum bracing has been removed from the SWB to allow access to the overpack drum, as necessary.

Step 3 **ENSURE** that one 3 in. x 10 ft cinch strap or equivalent is properly positioned around the overpack drum.

Step 4 **ENSURE** that a spreader bar is properly placed and secured on the forklift.

Step 5 **ENSURE** that the forklift is positioned, and **SECURE** the 3 in. x 10 ft cinch strap or equivalent to the hook on the spreader bar.

Step 6 **SLOWLY RAISE** the forklift tines until the 3 in. x 10 ft cinch strap or equivalent becomes tight.

Step 7 **($) SLOWLY RAISE** the waste drum ensuring that the waste drum is not raised greater than 4 ft above the ground. (SAC 5.10.2.2)

IPC-1

Step 8 **SLOWLY LIFT** the forklift tines, and **MANEUVER** the forklift and cinch strap as necessary to **ERECT** the overpack drum inside of the SWB.

Step 9 **LOWER** the forklift tines until the 3 in. x 10 ft cinch strap or equivalent becomes slack.

Step 10 **REMOVE** the 3 in. x 10 ft cinch strap or equivalent from the spreader bar.

APPENDIX 2
Page 15 of 16

LOAD HANDLING SEQUENCE & PROCEDURES

IPC-1

Work Steps for Lifting a 55-Gal or Overpack Waste Drum with a Forklift

WARNING

In accordance with ABD-WFM-006, R.0, TSRs for WCRRF, drums may not be elevated > 4 feet off the ground.

Step 1 Verify the drums weighs < 900 lb.

Step 2 Ensure the spreader bar is properly placed and secured on the forklift.

Step 3 Ensure the drum lift fixture (sling or drum handler as appropriate) is properly attached to the hook on the spreader bar.

Step 4 Attach the drum lift fixture to the top of the waste drum.

Step 5 Slowly raise the tines of the forklift until the drum lift fixture becomes tight.

Step 6 Slowly raise the waste drum ensuring the drum is not raised > 4 ft. above the ground.

Step 7 When the inner drum has cleared the sides of the overpack, slowly move the drum so that the inner drum is free of the bounds of the overpack.

Step 8 Slowly lower the waste drum onto the ground or a drum dolly.

Step 9 When the drum reaches the ground or drum dolly, continue to lower the forklift tines to allow removal of the drum lift fixture.

Step 10 Remove the drum lift fixture from the waste drum.

APPENDIX 2
Page 16 of 16

LOAD HANDLING SEQUENCE & PROCEDURES

Work Steps for Raising and Moving a Drum with a Forklift and Drum Grabber

IPC-1

WARNING

In accordance with ABD-WFM-006, TSRs for WCRRF, drums may not be elevated > 4 feet off the ground.

Step 1 Verify that the drum weighs < 900 lb.

Step 2 Ensure the drum grabber is properly placed on the forklift.

Step 3 Position the drum grabber to grab the drum in the desired location.

Step 4 Ensure that the drum is secured by the drum grabber.

Step 5 Raise the drum to the desired height for prepping or movement.

ATTACHMENT 1
Page 1 of 1

WCRRF OVERPACK DRUM ASSEMBLY PREPARATION DATA SHEET

5.[3] Overpack drum information:

Purchase Order No.: _____

Lot No.: _____

Manufacture Date: _____

5.[8] Overpack filtered vent and 2-in. bung torque wrench information:

	Filtered Vent	2-in. Bung
M&TE No.:	_____	_____
Cal. Expiration Date:	_____	_____
Tolerance:	_____	_____

Overpack filtered vent information:

Manufacturer: _____

Model No.: _____

Serial No.: _____

Manufacture Date: _____

5.[9] Torque wrench listed above is within the acceptable ranges as displayed on the calibration certificate. ☐ Yes ☐ No

5. [11] Performed By:_____/_____/_____/_____
Waste Handling Technician (print) Signature Z # Date

5.[15] Filtered vent torque value [120 in-lb (96 to 144 in-lb)]: _____ in-lb

5. [18] 2-in. bung plug torque value: _____ ft-lb

Comments: _____

_____

8.1[1] Performed By: _____/_____/_____/_____
Waste Handling Technician (print) Signature Z # Date

8.1[6] Reviewed By: _____/_____/_____/_____
Supervisor or designee (print) Signature Z # Date

ATTACHMENT 2
Page 1 of 1

WCRRF PARENT 55-GAL DRUM PREPARATION DATA SHEET

6.3[21] Prepared Parent 55-Gal Drum Number: _____

6.3[15] **($)** 55-gal drum wrapped in protective covering:
(ISI 6.3.6) ☐ SAT ☐ UNSAT

6.3[16] Platform scale serial number: _____
Platform scale calibration expiration date: _____

6.3[18] Prepared parent 55-gal drum weight (lb): _____

6.3[19] **($)** Prepared parent 55-gal drum weighs < 624 lb: (SR 4.5.1) ☐ SAT ☐ UNSAT

Comments: _____

8.1[1] Performed By: _____ / _____ / _____ / _____
Waste Handling Technician (print) Signature Z # Date

8.1[7] Reviewed By: _____ / _____ / _____ / _____
Supervisor or designee (print) Signature Z # Date

8.1[8][B] Acceptance criteria satisfied: ☐ YES ☐ NO

8.1[8][D] Approved by: _____ / _____ / _____ / _____
SOS/SOM or designee (print) Signature Z # Date Time

ATTACHMENT 3
Page 1 of 1

WCRRF SWB LOADING DATA SHEET

7.[16][A] SWB unique identifier: _____

Individual Drum Unique Identifier. (7.[16][B])	Individual Drum PE-Ci Value (7.[16][B])	Total Proposed SWB PE-Ci Value (7.[16][D])	Total Proposed SWB PE-Ci Value < 1,100 PE-Ci (7.[16][E])
			☐ SAT ☐ UNSAT

7.[16][G] Unusual internal item conditions: _____

Comments: _____

8.1[1] Performed By: _____ / _____ / _____ / _____
Waste Handling Technician (print) Signature Z # Date

Performed By: _____ / _____ / _____ / _____
Waste Handling Technician (print) Signature Z # Date

Performed By: _____ / _____ / _____ / _____
Waste Handling Technician (print) Signature Z # Date

Performed By: _____ / _____ / _____ / _____
Waste Handling Technician (print) Signature Z # Date

8.1[7] Reviewed By: _____ / _____ / _____ / _____
Supervisor or designee (print) Signature Z # Date

ATTACHMENT 4
Page 1 of 1

WCRRF OVERPACK DRUM CLOSURE DATA SHEET

7.[17] Overpack Drum Unique Identifier No.: _____

7.[23] Overpack drum closure ring torque wrench information:

M&TE No.: _____
Cal. Expiration Date: _____
Range in ft-lb: _____
Tolerance: _____

7.[24] Torque wrench listed above is within the acceptable ranges as displayed on the calibration certificate. ☐ Yes ☐ No

Performed By: _____ / _____ / _____ / _____
Waste Handling Technician (print) Signature Z # Date

7.[26] Overpack drum closure ring torque value: _____ ft-lb

7.[29] Threaded lug of the drum closure ring is not touching the jam nut and the locking ring lugs are not touching. ☐ SAT ☐ UNSAT

7.[34][B] Platform scale serial number: _____
Platform scale calibration expiration date: _____

IPC-1
7.[34][D] Overpack drum gross weight (lb): _____ lb

Comments: _____

8.1[1] Performed By: _____ / _____ / _____ / _____
Waste Handling Technician (print) Signature Z # Date

8.1[7] Reviewed By: _____ / _____ / _____ / _____
Supervisor or designee (print) Signature Z # Date

EP-WCRR-WO-DOP-1198, WCRRF Waste Characterization Glovebox Operations

LAUR-14-24883

Immediate Procedure Change (IPC) Cover		
Section 1 – Originator Request		
Document No.: EP-WCRR-WO-DOP-1198	Revision No.: 1	IPC No.: 1
Title: WCRRF Waste Characterization Glovebox Operations		

Description of need and requested action (Attach document mark-up and numbered additional sheets, if needed):
Revise to add addition step for handling a pressurized container that is equipped with a mechanical device that will allow venting of the container without puncturing Section 10.3.

Originator Name (print):	Organization:	Z#:	Date:
Camillo R DiSalle	Procedure	200882	3-12-2014

Section 2 –Reviews

Discipline:	Name:	Signature:	Date:
WCRRF SOM	John Guadagnoli/R Axtell	/s/ John Guadagnoli/R Axtell	3-12-2014
Engineering	Val Rhodes	/s/ Val Rhodes	3-12-2014

USQ/USI Number: WCRRF-14-147-D Rev. 0 ☐ N/A

Section 3– Final Approvals

FOD Concurrence:	Print Name and Title:	Z#:	Date:
N/A	N/A	N/A	N/A
☒ Permanent ☐ Limited Use	Effective Date: 3-13-2014 Expiration Date: N/A		

Comments: FOD concurrence N/A, the FOD designee is included in the Review and Approval process.
unclassified Pat Crawford 3/13/14

Responsible Line Manager Signature:	Print Name and Title:	Z#:	Date:
	Louis E. Jalbert	121997	3-13-2014

IPC-1

WCRRF Waste Characterization Glovebox Operations

Effective Date: 3-3-2014

NOTE *This procedure may be either a Moderate or High/Complex Hazard activity based on the anticipated radiation levels during the performance of the activity in accordance with P300 requirements.*

Hazard Class:	☐ Low	☒ Moderate	☒ High/Complex
Usage Mode:	☐ Reference	☐ UET	☒ Both UET & Reference

The Responsible Manager has determined that the following organizations' review/concurrence is required for the initial document and for major revisions a same type and level review is required. Review documentation is contained in the Document History File:

Environmental Stewardship
Engineering
Industrial Hygiene and Safety
LTP DDP Project Manager
Operations Support
Quality Assurance
Radiation Protection
Shift Operations Manager
Subject-Matter Expert
WCRRF Shift Operation Supervisor

Responsible Manager, LTP-DDP Operations Manager

Name (print)	Z#	Signature	Date
Lou Jalbert	121997	/s/ L Jalbert	2-28-2014

Classification Review: ☐ N/A ☒ Unclassified ☐ UCNI ☐ Classified _____

Name (print)	Z#	Signature	Date
Kari Vitaletti	245399	//s/ K Vitaletti	2-28-2014

Working Copy / Information Only (circle one)
Initials / Date: _____/_____

This document fully satisfies the requirements of P300, Integrated Work Management, in order to systematically describe the work activity, the associated hazards, and the controls that **MUST** be employed to mitigate the risks.

REVISION HISTORY

Document Number	Issue Date	Action	Description
EP-WCRR-WO-DOP-0233, R.0	May 2007	New Document	
EP-WCRR-WO-DOP-0233, R.1	June 2007	Major Revision	Added requirement to move assay equipment outside of the WCG exclusion zone when not in use. Added precaution to prevent addition of items from multiple parent drums into a single daughter drum or Pipe Overpack Container. Added precaution for prohibited items – Class 1 oxidizers such as nitrates and reactive flammables.
EP-WCRR-WO-DOP-0233, R.2	June 2007	Major Revision	Added steps for dispositioning of potential pressurized containers.
EP-WCRR-WO-DOP-0233, R3	July 2007	Major Revision	Added steps for disposition of liquids. Added steps for actions to be taken in the event that any actual or suspected Class 1 oxidizers, flammables, or Pyrophoric materials/items are encountered.
EP-WCRR-WO-DOP-0233, R4	July 2007	Major Revision	Made use of glovebag to process Pu-238 inside the WCG optional based on input from the Facility ALARA Review Committee.
EP-WCRR-WO-DOP-0233, R5	July 2007	Major Revision	Added precaution for performance of diligent glove surveys and periodic glovebox wipe-downs when handling Pu-238. Deleted requirement for use of glovebag to process Pu-238 inside the WCG. Deleted Note in Sect. 8.12 which referenced use of partially filled POC's if all waste is from the same waste stream.
EP-WCRR-WO-DOP-0233, R.6	October 2007	Major Revision	Added precaution to prohibit remediation of following in the WCG 1) sealed containers > 4 liters that have a positive locking mechanism, 2) sealed un-vented containers > 4 liters with free liquids. Added action steps to take if containers are encountered. Added "allowed" container types that may be remediated. Added Attachment 3: Real Time Radiography Review for "Un-Allowed" Contents
EP-WCRR-WO-DOP-0233, R.7	October 2007	Minor Revision	Revised wording in Attachment 3 for review of RTR data.
EP-WCRR-WO-DOP-0233, R.8	October 2007	Major Revision	Deleted requirement for Real Time Radiography review & Attachment 3 (will be performed IAW EP-WCRR-WO-DOP-0211). Added section for processing high dose waste items (> 190 mrem/hr) of mixed material types. Added Attachment 3: Flowchart for Processing of High Dose Items of Mixed Material Types.
EP-WCRR-WO-DOP-0233, R.9	TBD	Major Revision	Incorporate the WCRR TSR page change to allow the opening of unvented 5- to 30-gal waste packages inside of the WCG.
EP-WCRR-WO-DOP-0233, R.10	January 2008	Major Revision	Delete requirement for SOM & CSE review of grounding sealed containers prior to venting.
EP-WCRR-WO-DOP-0233, R.11	March 2008	Minor Revision	Revised page 7 of 31 to include processing items that are heavy.

REVISION HISTORY (continued)

Document Number	Issue Date	Action	Description
EP-WCRR-WO-DOP-0233, R12	April 2009	Major	Revise procedure to incorporate the WCRRF TSR Revision 1 changes to the minimum staffing requirements which allows for the SOM to be on-call in the Operations Mode and now includes the requirements for the SOS (requires that the SOS be present at WCRRF during the Operations Mode and on-call in the Warm Standby Mode). This revision does not introduce any new hazards in this procedure. Update forms are required.
EP-WCRR-WO-DOP-0233, R13	May 11, 2009	Minor Revision	Revise procedure to provide guidance for the operator that the glovebox operations may continue after opening a < 5 gal unvented container without waiting 30 min., but the WCG electrical receptacles cannot be re-energized until 30 min. has elapsed since the unvented container was opened. Add additional instructions for creating loops within the document to address waste packages imbedded within other waste packages. This revision does not introduce any new hazards.
EP-WCRR-WO-DOP-0233, R14	June 12, 2009	Major Revision	Revise procedure to incorporate editorial corrections and to provide instructions for what to do when a shielded container is encountered containing radioactive material that exceeds the RWP limit. Add instructions to record the Waste Container Identification Number on the applicable attachments. This revision does not introduce any new hazards.
EP-WCRR-WO-DOP-0233, R15	November 24, 2009	Major Revision	Revise procedure to incorporate instructions for establishing, controlling, and the disposition of the Prohibited Item Collection Drum. Make editorial corrections as necessary. This revision does not introduce any new hazards.
EP-WCRR-WO-DOP-0233, R16	Approved for Training	Major Revision	Revise procedure to perform a pH test using pH strips and change “absorbent” to “approved absorbent” in Appendix 2. Make editorial corrections as necessary. This revision does not introduce any new hazards.
EP-WCRR-WO-DOP-0233, R17	February 18, 2010	Major Revision	Revise procedure to incorporate instructions for recording additional information for the prohibited items placed in the prohibited item collection drum. Incorporate process improvements (step sequences) and make editorial corrections as necessary. This revision does not introduce any new hazards. Incorporate the requirements of P300 and the hazards and controls from JHA 0008741 into this procedure.

REVISION HISTORY (continued)

Document Number	Issue Date	Action	Description
EP-WCRR-WO-DOP-0233, R18	March 22, 2010	Major Revision	Revise procedure to incorporate instructions for glovebox glove inspections and make editorial corrections as necessary. This revision does not introduce any new hazards.
EP-WCRR-WO-DOP-0233, R19	Training Only	Major Revision	Revise procedure to incorporate formality of operations into the procedure and incorporate the four parts of an integrated work document into the procedure in accordance with P300. Change title to WCRRF Waste Characterization Glovebox Operations. This revision is a total rewrite and revision bars have been omitted. This revision does not introduce any new hazards. This revision supersedes the following procedures: • EP-WCRR-WO-DOP-0223, Revision 4 • EP-WCRR-WO-DOP-0231, Revision 4 • EP-WCRR-WO-DOP-0232, Revision 8 • EP-WCRR-WO-DOP-0233, Revision 18
EP-WCRR-WO-DOP-0233, R20	October 27, 2010	Major Revision	Revise procedure to remove the requirements of SAC 5.10.1.2(1) in accordance with TSR Page Change 1.2, the fire blanket and MET-L-X is no longer a TSR requirement. The MET-L-X is being left as an administrative control. Make editorial corrections such as format changes. This revision does not introduce any new hazards.
EP-WCRR-WO-DOP-0233, R.21	November 2, 2010	Major Revision	Revise procedure to require that Building TA-50-69 is in the OPERATION mode for all activities in the procedure. Remove the Note in front of Step 4.3[7]. Add “approximately halfway” to Step 5.[9]. Change WARNING before Step 6.1[11] to indicate that there is no drum on the lift at this time. Revise Step 10.3[3] to remove requirement for testing a small portion of liquid and provide additional guidance for absorbing liquid. Make editorial corrections such as format changes. This revision does not introduce any new hazards.
EP-WCRR-WO-DOP-0233, R.22	November 8, 2010	Minor Revision	Revise procedure to modify hold tag note in Section 10.3 and modify step 10.3[2]. This revision does not introduce any new hazards.
EP-WCRR-WO-DOP-0233, R.23	February 8, 2011	Major Revision	Revise procedure to correct the TSR references and to allow the replacement of WCG bags in the WARM STANDBY mode. This revision does not introduce any new hazards.

REVISION HISTORY (continued)

Document Number	Issue Date	Action	Description
EP-WCRR-WO-DOP-0233, R.24	February 13, 2011	Minor Revision	Revise procedure to correct references and to provide clarification for the closure of a POC. Provide additional guidance for securing the horsetail during bag-in/bag-out operations. Make editorial corrections as necessary. This revision does not alter the purpose, scope, or intent of the original document. This revision does not introduce any new hazards.
EP-WCRR-WO-DOP-0233, R.25	April 13, 2011	Minor Revision	Revise procedure to incorporate process improvements. Incorporate instructions as to what to do if the parent drum closure ring cannot be reinstalled before lowering the parent drum. Make editorial corrections as necessary. This revision does not alter the purpose, scope, or intent of the original document. This revision does not introduce any new hazards.
EP-WCRR-WO-DOP-0233, R.26	April 18, 2011	Minor Revision	Revise procedure to provide instructions for loosening the nut on the closure ring bolt before lifting the waste drum up to the WCG. Make editorial corrections as necessary. This revision does not alter the purpose, scope, or intent of the original document. This revision does not introduce any new hazards.
EP-WCRR-WO-DOP-0233, R.27	June 9, 2011	Minor Revision	Revise procedure to provide instructions for inspecting drum lift hinge pins and attaching hinge pin retaining clips in Section 6.2; and add note that the retaining clips must be ML-2. Update equipment list to reflect ML-2 retaining clip. Make editorial corrections as necessary. This revision does not alter the purpose, scope, or intent of the original document. This revision does not introduce any new hazards.
EP-WCRR-WO-DOP-0233, R.28	August 10, 2011	Major Revision	This procedure is being revised to allow for bagging a POC onto the WCG, to correct the actions to be taken if a drum is stuck on the WCG drum lift, and to allow for processing waste at greater than 10 rem/hr. This last issue makes the activity a High/Complex Hazard Activity. The HA has been modified to allowed for the procedure to be performed as a Moderate or High/Complex Hazard Activity.
EP-WCRR-WO-DOP-0233, R.29	August 12, 2011	Minor Revision	Revise procedure to correct the high/complex activity hazard classification step in Attachment 1 to “> 10 rem/hr.” This revision does not introduce any new hazards.

REVISION HISTORY (continued)

Document Number	Issue Date	Action	Description
EP-WCRR-WO-DOP-0233, Rev 29 IPC-1	August 29, 2011	IPC-1	Revised to change word in step 5.[11] from below to above and a caution and additional language to step 5[12] added ENSURE banding material is not placed around the hoop.
EP-WCRR-WO-DOP-0233, R.30	Training Only	Minor Revision	Revised to update requirements from page change 2.0 and 2.1 associated with STATIONARY Fire Watch in precautions, limitations and associated. Steps of the procedure when inventory is greater than >300 PE Ci. A STATIONARY FIRE WATCH is required in OPERATIONS and WARM STANDBY MODE when the WCG contains INVENTORY > 300 PE-Ci of EQUIVALENT COMBUSTIBLE WASTE. (SAC 5.10.1.7.1) and WCG SHALL be equipped with three 1-litre containers of carbon spheroids or MetL-X when the glovebox INVENTORY is >300 PE-Ci of EQUIVALENT COMBUSTIBLE WASTE (SAC 5.10.1.7.2), and WCG operators SHALL be trained in glovebox fire suppression techniques in order to extinguish small, early developing fires when processing INVENTORY > 300 PE-Ci of EQUIVALENT COMBUSTIBLE WASTE, in coordination with the STATIONARY FIRE WATCH, . This revision has not introduced any additional changes to the JHA.
EP-WCRR-WO-DOP-0233, R.31	Training Only	Minor Revision	Revise procedure to incorporate WCRRF TSR 2.0/2.1 IVR issues. Make editorial corrections as necessary. Revision does not introduce any additional hazards.
EP-WCRR-WO-DOP-0233, R.32	January 31, 2012	Minor Revision	Revise steps referencing 300 PE-Ci to add “equivalent combustible” after PE-Ci. Revision does not introduce any additional hazards.
EP-WCRR-WO-DOP-0233, R.33	April 5, 2012	Minor Revision	Revise procedure to incorporate instructions for the introduction of supplies into the WCG, for leaving a parent drum attached to the WCG overnight, and modify actions for a drum lift deficiency. Make editorial corrections such as correcting step numbering. Revision does not introduce any additional hazards.
EP-WCRR-WO-DOP-0233, R.34	May 24, 2012	Minor Revision	Revise procedure to provide guidance on simulating waste in a drum when obtaining radiation surveys and add the use of the Trolley Rail Clamp. Make editorial corrections such as correcting references. Revision does not introduce any additional hazards.

REVISION HISTORY (continued)

Document Number	Issue Date	Action	Description
EP-WCRR-WO-DOP-0233, R.35	July 2, 2012	Major Revision	Revised to separate verification steps from actual steps in Section 10.1 [10][D] and 10.1[10][E], 10.1[11][C], and reword Step 10.1[11][O] to read If directed by Supervision as a pre condition and Attachment 4 & 5 . Added steps for instructions for Administrative Lock Log, key, and lock Section 10. Added Steps to Section 4.1, 6.2, and 7.1 for using the Trolley Clamp Device. No additional hazards were identified during this revision. Rev bars in left column display locations of changes to the procedure.
EP-WCRR-WO-DOP-0233, R.36	August 1, 2012	Major Revision	Revised procedure to incorporate EP-SO-1708, and add steps to clarify the amount of absorbent needed when processing Nitrate Salts. Also added Appendix 6 Administrative Control Lock Log Sheet. No additional hazards were identified during this revision. Revision bars in the left column display location of changes in the procedure.
EP-WCRR-WO-DOP-0233, R.37	March 20, 2013	Major Revision	Revise procedure to allow flexibility with the processing of Nitrate Salts in order to permit flexibility with the amount of absorbent used. Make editorial corrections as necessary. Delete reference to the initiation of an NCR for issues associated with the waste material. No additional hazards were identified during this revision.
EP-WCRR-WO-DOP-0233, R.38	August 29, 2013	Major Revision	Revise procedure to incorporate steps for the implementation of WCATS at WCRRF. Make editorial corrections as necessary. This revision does not introduce any new hazards.
EP-WCRR-WO-DOP-1198, R.0	January 31, 2014	Major Revision	Revised to incorporate current list of approved Manual Drum Movements per WCRR-SO-13, Manual Drum Movement at WCRRF. Added WCRRF Desktop application to WCATS steps as applicable. Added updates for performing a critical lift in accordance with P101-25 Attachment B Revision 2. New procedure number to align with document control. No additional changes were introduces to the hazardous analysis. No Rev bars major revision
EP-WCRR-WO-DOP-1198, R.0	February 27, 2014	IPC	Revise procedure to correct step 6.1[14][A]. IF there are six randomly distributed broken wires in one rope lay or three broken wires in one strand in one rope lay. No additional hazards were incorporated in this ICP.

REVISION HISTORY (continued)

Document Number	Issue Date	Action	Description
EP-WCRR-WO-DOP-1198, R.1	March 3, 2014	Major Revision	Revised to add steps for drilling unvented containers Section 10 as applicable. Added steps in Section 6.2 to cut drum lid ringbolt prior to placement in WCG. Updated Appendix 1 footer and other corrections to P101-25 rev 3. Added Step 4.1[9] for handling Beryllium waste. Added Hazards to JHA and incorporated into the Precautions and Limitations.
EP-WCRR-WO-DOP-1198, R.1 IPC-1	March 13, 2014	IPC	Revise to add addition step for handling a pressurized container that is equipped with a mechanical device that will allow venting of the container without puncturing Section 10.3.

TABLE OF CONTENTS

Section Page

TITLE PAGE 1
REVISION HISTORY 2
TABLE OF CONTENTS 8

1. PURPOSE 11

2. SCOPE 11

3. PRECAUTIONS AND LIMITATIONS 12

4. PREREQUISITES ACTIONS 20
4.1 Planning and Coordination 20
4.2 Materials and Equipment 22
4.2.1 Special Tools and Equipment 22
4.2.2 Consumables 23
4.2.3 Measurement and Test Equipment (M&TE) 23
4.3 Field Preparation 23
4.3 Field Preparation (continued) 27

5. PERFORMANCE—PARENT WASTE CONTAINER PREPARATION 32

6. PERFORMANCE—WCG PARENT DRUM LOADING/UNLOADING 36
6.1 WCG Drum Lift Daily Inspection 36
6.2 Parent Drum Loading 40
6.3 Parent Drum Unloading 44

7. PERFORMANCE—WCG PARENT DRUM BAG-ON/BAG-OFF OPERATIONS 47
7.1 Parent Drum Bag On 47
7.2 Parent Drum Bag Off 49

8. PERFORMANCE—WCG DAUGHTER DRUM, BAGPORT, OR GLOVEPORT BAG-ON/BAG-OFF OPERATIONS 54
8.1 Bag On Daughter Drum, Bagport, or Gloveport 54
8.2 Bag Off Daughter Drum 56

9. PERFORMANCE—ITEM BAG-IN/BAG-OUT OPERATIONS 60
9.1 WCG Item Bag-Out 60
9.2 WCG Introductory Port 64

10. PERFORMANCE—WCG WASTE PROCESSING 66
10.1 WCG Waste Processing Preparation 66
10.2 Waste Material Greater Than 190 mrem/hr 79
10.3 Prohibited Item Disposition 83
10.4 Waste Splitting Activities 89
10.5 Repackaging Activities 91
10.6 Processing Nitrate Salt Drums 92

11. POST-PERFORMANCE ACTIVITY 94

TABLE OF CONTENTS (continued)

Section Page

11.1 Disposition 94
11.2 Records Processing 96

12. REFERENCES 97

Appendices
Appendix 1, WCRRF Drum Lift Critical Lift Plan (P101-25, Attachment B) 99
Appendix 2, WCRRF Allowable Container Types For Remediation 109
Appendix 3, Example Preoperational Inspection Record For Overhead Cranes and Hoists 110
Appendix 4, Volumes of Cylindrical Inner Containers Near 4 Liters 111
Appendix 5, Flowchart For Processing of High Dose Items of Mixed Material Types 112
Appendix 6, Administrative Control Lock Log Sheet 113
Appendix 7, Manual Drum Movement Special Instructions 114

Attachments
Attachment 1, WCRRF WCG Waste Processing Data Sheet 115
Attachment 2, WCRRF WCG Drum Lift Inspection Data Sheet 122
Attachment 3, WCRRF WCG Breaching (Opening) Unvented, Sealed Waste Packages Checklist 119
Attachment 4, WCRRF WCG Breaching (Opening) Metal 5- to 30 gal Unvented 6 Sealed Waste Package Surveillance 122
Attachment 5, WCRRF Prohibited Item Collection Drum Data Sheet 123

1. PURPOSE

This procedure provides detailed instructions for Waste Characterization Glovebox (WCG) operations at the Waste Characterization, Reduction, and Repacking Facility (WCRRF).

TRU waste that has been identified as not satisfying Waste Isolation Pilot Plant (WIPP) acceptance criteria must be remediated to satisfy the WIPP criteria. Prohibited items must be removed or corrected and the container must also satisfy limits on the amount of radioactive material in each container. Containers that fail to satisfy the WIPP criteria maybe sent to WCRRF to be safely remediated in the WCG.

2. SCOPE

This procedure applies to personnel who perform WCG operations.

The Performance sections of this procedure may be performed independently or in conjunction with other Performance sections.

As used within this procedure a parent waste container is the originating waste container received at WCRRF for processing and a daughter drum is the resulting waste container packaged with the originating waste container waste. There may be multiple daughter drums.

This procedure addresses the following WCG activities:

- Preparation of parent waste containers
- Daughter drum, bagport, and gloveport bag-on/bag-off operations
- Parent drum bag-on/bag-off operations
- Parent drum WCG loading/unloading operations
- WCG waste processing

This procedure addresses the following activities for the complete processing and disposition of waste material within the WCG:

- Visual Examination (VE)
- Prohibited Item Dispositioning (PID)
- Pipe Overpack Component (POC)
- Waste Splitting
- Repackaging

This procedure is performed in conjunction with the Waste Compliance and Tracking System (WCATS), in order to track the WCRRF and Building TA-50-69 radioactive material inventory, populate WCATS with waste container information, to generate Transuranic (TRU)

2. SCOPE (continued)

Waste Storage Records (TWSRs), to generate labels, and to associate new daughter waste containers with the parent waste container.

The performance of this procedure may be classified as a Moderate or High/Complex Hazard activity based on the potential radiation levels encountered during the performance of this activity. To accommodate the two hazard classifications this document requires the identification of the potential radiation levels that may be encountered and documentation of the hazard classification level (moderate or high/complex).

Appendix 7, Manual Drum Movement Special Instructions, is a list of approved methods for manual drum movements developed in accordance with EP-DIV-SO-20057, EWMO Health and Safety Policy-Manual Movement for WCRRF. From the effective date of this procedure, any manual drum movements not listed in Appendix 7 of this procedure **SHALL** undergo the approval process in accordance with EP-DIV-SO-20057. If an interpretation of Appendix 7 is required, the LTP-DDP Operations Manager will provide the final determination as to whether the manual drum movement is captured on Appendix 7 or the manual drum movement instructions are to be developed in accordance with EP-DIV-SO-20057.

3. PRECAUTIONS AND LIMITATIONS

- This procedure contains special procedure step markings. **($)** is used to identify steps that implement WCRRF Safety Basis requirements. Steps containing **($)** may not be changed without Engineering approval to ensure the safety envelope is maintained.

- To comply with the intent of the As Low As Reasonably Achievable (ALARA) Program, all personnel **SHALL** apply the principles of time, distance, and shielding when working with radiological materials.

- Avoid the open area of a shielded container to prevent an increased exposure to radiation which could result from the streaming of radiation while accessing shielded containers during the processing of waste.

- Activities, items, and containers **SHALL** satisfy approved design specifications, regulatory requirements, process-specific parameters, and procedural requirements. Activities, items, or containers that do not conform to the approved specifications and requirements are considered nonconforming and Nonconformance Reports (NCRs) **SHALL** be generated in accordance with P330-6, Nonconformance Reporting, as required.

3. PRECAUTIONS AND LIMITATIONS (continued)

- When a worker observes an unsafe condition or act that may pose an imminent danger or other safety concern/hazard, the worker has the authority and responsibility to inform the worker engaged in the work and request that the work activity be paused and/or stopped based on the risk posed to the individual, the employees, the environment, or the facility in accordance with P101-18, Procedure for Pause/Stop Work.

- Supervision **SHALL** be notified if this procedure cannot be performed as written.

- Not Applicable (N/A) is documented on the attachments during the performance of this procedure indicating information that is not required to be recorded.

- **($)** TRU WASTE CONTAINERS **SHALL** not be stacked and **SHALL** not be lifted higher than 4 ft, excluding the WCG drum lift and lifts during loading or unloading from delivery trucks. (SAC 5.10.2.2)

- Drums **SHALL** not be lifted greater than 4 ft during any operation involved in preparing the drum.

- This procedure **SHALL** not be used to prepare DEGRADED/LOSS OF INTEGRITY drums. DEGRADED/LOSS OF INTEGRITY drums are prepared in accordance with EP-WCRR-WO-DOP-0236, WCRRF Loading/Unloading SWB or 85-Gal Drum.

- **($)** Drums **SHALL** be verified to weigh less than 630 lb before lifting the drums using the WCG drum lift. (SR 4.5.1) Administratively drum weights **SHALL** be limited to 624 lb in order to take into consideration the uncertainties of the instrumentation.

- This procedure is to be performed only by Waste Handling Operators as qualified Glovebox Operators.

- To avoid pinch points, the drum lift pendant operator **SHALL** announce operation of the drum lift before commencing raising/lowering of a drum and that all personnel **SHALL** stand clear and to the side of drum movement.

- **($)** The facility must be in the OPERATION MODE to process waste in the WCG. (TSR 1.2)

3. PRECAUTIONS AND LIMITATIONS (continued)

- The approximate weight of load should be known before moving and the appropriate capacity lift selected. Be aware of uneven loading and shifts in the load when moving.

- Drums can have sharp edges and create pinch points when being moved – use appropriate gloves when handling drums.

- Use proper lifting techniques and buddy system and wear steel toed shoes when performing heavy lifting or movements and comply with the requirements of EP-DIV-Policy-20057, EWMO Health and Safety Policy-Manual Movement.

- **($)** No flammable liquids or gases, and no combustible liquids with NFPA Flammability Rating greater than 1 **SHALL** be stored or used within BUILDING TA-50-69 when INVENTORY is in BUILDING TA-50-69 except three size 1 cylinders of P-10 gas and flammable or combustible liquids found in the TRU WASTE CONTAINER. (LCO 3.4.2)
- Portable high-efficiency particulate air (HEPA) filter ventilation equipment **SHALL** be removed from the WCG Exclusion Area after operations are complete. This limitation supports LCO 3.4.2.

- Due to the unique characteristics of Pu-238, diligent glove surveys should be performed before and after handling Pu-238, as well as periodic glovebox wipe downs.

- All operators involved in the execution of this procedure must be qualified as Waste Handling Operators.

- Fire Patrol or Stationary Fire Watch **SHALL** be established in accordance with the applicable Technical Safety Requirements and identified in EP-DIV-AP-0120, EWMO Watchbill Administration.

- STATIONARY FIRE WATCH **SHALL** be performed in accordance with EP-DIV-AP-0120, EWMO Watchbill Administration.

- **($)** WCG **SHALL** be equipped with three 1-liter containers of carbon spheroids or Met-L-X when the glovebox INVENTORY is > 300 PE-Ci of EQUIVALENT COMBUSTIBLE WASTE. (SAC 5.10.1.7.1)

- An administrative control will ensure that the WCG will be equipped with three 1-liter containers of carbon spheroids or MET-L-X to prevent the potential spread of a fire in the glovebox regardless of the inventory quantity in the WCG.

3. PRECAUTIONS AND LIMITATIONS (continued)

- **($)** A STATIONARY FIRE WATCH **SHALL** be in place when the WCG contains INVENTORY > 300 PE-Ci of EQUIVALENT COMBUSTIBLE WASTE, in order to extinguish small, early developing fires, in coordination with WCG operators. (SAC 5.10.1.7.2)
- When processing a parent drum if an item is encountered to be too large or heavy to handle supervision is to be notified.

- Use caution when performing glovebox operations. Operations may involve handling of sharp objects, applying force to objects with tools, lifting heavy materials or items.
  - The glovebox gloves **SHALL** have cut resistant (e.g., leather, or HexArmor®) gloves over them during glovebox operations when handling sharp objects or opening/closing waste containers.
  - Use the two-man rule when lifting heavy materials or items.
  - Cut or apply force away from hands and arms.
  - Use approved tools and techniques.
  - Tools **SHALL** be in good working order.

- **($)** WCG operators **SHALL** be trained in glovebox fire suppression techniques in order to extinguish small, early developing fires when processing INVENTORY > 300 PE-Ci of EQUIVALENT COMBUSTIBLE WASTE, in coordination with the STATIONARY FIRE WATCH. (SAC 5.10.1.7.3)

- Unvented, sealed waste packages are those waste packages that have a positive locking mechanism, such as a gasket with drum closure ring or a screw top lid (with no other openings) to seal the lid to the waste package.

- **($)** When breaching (opening) unvented, sealed waste packages in the WCG the following requirements **SHALL** be satisfied:
  - Non-sparking tools and processes **SHALL** be used, (SAC 5.10.1.6.1)
  - Electrical receptacles within the WCG **SHALL** be de-energized before opening the waste package and remain de-energized for a minimum of 30 minutes after removing the lid and lid restraining device. (SAC 5.10.1.6.2) and (SAC 5.10.1.6.3)

- **($)** Before breaching (opening)an unvented, sealed 5- to 30-gal waste packages in the WCG a lid restraining device **SHALL** be inspected for degradation and properly installed (SAC 5.10.1.5.1), and WCG operations **SHALL** be ceased for a minimum of 30 minutes following the removal of the waste package lid and lid restraining device (breaching). (SAC 5.10.1.5.2)

3. PRECAUTIONS AND LIMITATIONS (continued)

- **($)** When processing a positively sealed 30- to 5-gallon metal WASTE PACKAGE in the WCG, the parent 55-gallon drum bagged-on to the WCG and metal WASTE PACKAGE **SHALL** be grounded when the metal WASTE PACKAGE is breached and for 30 minutes after the removal of the lid and lid restraining device. (LCO 3.6)

- Personnel **SHALL** be aware of heat and cold stress indicators and observe co-workers in accordance with the Thermal Stress Awareness Course.

- Personnel protective equipment (PPE) **SHALL** be worn (e.g., safety shoes, cut resistance gloves, and respirator) as required by Industrial Hygiene/Health and Safety and in accordance with the Radiological Work Permit (RWP).

- Sharp objects **SHALL** be covered and properly stored when not in use. Wear cut/puncture resistant glove (e.g., leather) and cut away from your body when in use.

- All sharp objects that are introduced inside the glovebox **SHALL** be properly identified and stored when not in use in accordance with EP-DIV-AP-20047, LTP Glovebox/Glovebag and Glove Safety Program.

- Routine inspection of glovebox gloves **SHALL** be conducted in accordance with EP-DIV-AP-20047 and this procedure.

- To prevent personnel injury due to ergonomic, pinch point, and other general hazards, personnel **SHALL** maintain an awareness of the working environment and task activities and use good work practices and techniques, skill of craft, good ergonomic practices, and minimize time in awkward/uncomfortable positions.

- Spark-producing and non-sparking tools **SHALL** be distinguished from each other. Spark-producing tools are to be set aside in the WCG, and not handled, when non-sparking tools are required.

- A cordless drill may be used to open a parent drum. This will minimize overextending glovebox gloves and potential damage (i.e., tearing a glove) when using a ratchet. The cordless drill is considered to be a spark-producing tool and is to be placed aside in the WCG, and not handled, when non-sparking tools are required.

- Charging of portable electric equipment in the WCG **SHALL** not be performed when there is INVENTORY in the WCG.

3. PRECAUTIONS AND LIMITATIONS (continued)

- Charging of battery operated equipment external to the WCG **SHALL** not be charged within the WCG exclusion zone.

- If receptacle inside the WCG or in the WCG exclusion zone is used, the equipment being plugged in must be in the OFF position before inserting or removing the plug at the receptacle.

- Prohibited items are documented by two distinct processes. One is through the use of the fast scan process, indicated by the GREEN hold tag. The second is through the use of CCP's NCR, indicated by a RED hold tag.

- Waste placed into daughter drums or Pipe Overpack Containers (POCs) must be from a single parent drum.

- Based on waste acceptance criteria, Class 1 oxidizers such as nitrates, and reactive flammables such as lithium metal or hydrides are prohibited items in the WCRRF.

- Liquids removed from a parent drum must be remediated (absorbed) inside of a new container.

- Storage of drum lid restraints when not in use **SHALL** be such that the drum lid restraints are protected from degradation (e.g., daughter drum).

- Avoid slips, trips, and falls by wearing the proper footwear with slip-resistant soles and using handrails when using stairs. Use established pathways when available and avoid walking on uneven or unstable surfaces.

- Glass sample vials may contain residual granular plutonium hydride which can generate sparks when subjected to mechanical agitation. To reduce the possibility of breaking a glass sample vial and the generation of sparks, glass sample vials **SHALL** be handled with care and void volume reduction activities **SHALL** be performed without excessive force. (EP-DIV-REPORT-09)

- The fire protection system sprinkler head located in the WCG is a water source that if activated (inadvertently or as a result of an actual WCG fire) would result in the spread of radiological contamination. Contact with the sprinkler head during waste processing is to be avoided in order to reduce the possibility of the inadvertent initiation of water flow into the WCG.

3. PRECAUTIONS AND LIMITATIONS (continued)

- **($)** No combustibles **SHALL** be stored within the waste characterization glovebox (WCG) exclusion zone. The WCG exclusion zone is 10 ft around the WCG, up to GBE, or up to the walls of Room 102, whichever is less. (LCO 3.4)

  The following are excluded from the above limitations of LCO 3.4
  - INVENTORY that is in the WCG or staged in BUILDING TA-50-69.
  - Combustible components of support equipment (e.g., wiring insulation, operator platforms and rubber mats) within the WCG Exclusion Zone and associated with WCG processing.
  - Drum liners or wrapping around DEGRADED/LOSS OF INTEGRITY drums that are inside BUILDING TA-50-69 being loaded and working amounts of material necessary to complete bag on/off operations such as tape, cheese cloth, and extra operator gloves.
  - Hydraulic fluid within the engineered, closed-loop, containment systems.
  - Combustible components associated with a forklift.

- The Class 2 laser scanning head on the WCATS mobile device can cause eye injury if eye is exposed to the beam. Do <u>not</u> allow eyes of user or observers to become exposed to laser beam.

- The WCATS mobile device contains lithium-ion battery. The operating temperature recommendation for the Workabout Pro 3 (WCATS mobile device) is from -4 degrees F to 122 degrees F. Do <u>not</u> store the WCATS mobile device where temperatures are less than -40 °F or greater than 140 °F. Exposure to extreme temperatures (greater than 140 °F) may cause battery to explode. Keep mobile device out of direct sunlight for extended periods of time when not in use. Do not incinerate, mutilate, short circuit, or disassemble the battery pack. Do not dispose of in municipal waste receptacles. Dispose of in properly marked universal waste disposal areas.

- All manual physical movements of 55-gal and larger drums, whether empty or containing waste, **SHALL** be performed as a last resort and with written approval in accordance with EP-DIV-SO-20057, EWMO Health and Safety Policy-Manual Movement

- All approvals for manual physical movements in accordance with EP-DIV-SO-20057, EWMO Health and Safety Policy-Manual Movement and Appendix 7, Manual Drum Movement Special Instructions.

3. PRECAUTIONS AND LIMITATIONS (continued)

- All critical lift plans executed by LANL personnel **SHALL** be developed using Attachment B, LANL Critical Lift Plan, of P101-25, Cranes, Hoists, Lifting Devices, and Rigging Equipment.

- The instructions in this procedure satisfy the P101-25 ordinary lift requirements and the use of LANL Form 1611, Ordinary Lift Procedure, is not required. Not all of the items listed on Form 1611 are captured in this procedure because this procedure is performed using gantry cranes and forklifts in preapproved locations and lifts standard waste containers of a known size and volume.

- Forklift operations are governed by the LANL procedure P101-4, Forklift and Powered Industrial Trucks. P101-4 requires the completion of the applicable sections of a LANL procedure P101-25 Attachment B for critical lifts involving a forklift or powered industrial truck. Forklift operations not involving a critical lift (e.g., load suspended below the forks of the forklift) are not required to comply with the requirements of P101-25.

- Support Services Subcontractors executing this procedure SHALL comply with the safety and health requirements documented in contractual agreements with the LANL.

- Drill bits are sharp and can result in personnel injury or radiological contamination from compromised PPE.

4. PREREQUISITES ACTIONS

NOTE *The listed prerequisite actions may be completed in any order.*

4.1 Planning and Coordination

Supervisor or designee

[1] **ENSURE** that this procedure is the latest revision, and **IDENTIFY** this document as Working Copy or Information Only on the Title Page.

[2] **ENSURE** that the performance of this procedure has been scheduled on the WCRRF schedule.

[3] **ENSURE** that an RWP for the planned activity has been issued.

[4] **ENSURE** that a pre-job briefing is conducted for all personnel involved in the performance of this procedure, in accordance with EP-DIV-AP-0112, EWMO Pre-Job Briefings, and that the pre-job briefing included weather conditions, communication requirements, hazards/controls and emergency response actions.

[5] **ENSURE** that, as a minimum, the following personnel trained in the use of this procedure are available for performance of this procedure, as required:

- Two Radiological Control Technician (RCT)
- Four Waste Handling Technician
- One Supervisor (e.g., Shift Operations Supervisor or Person-In-Charge)
- One Central Characterization Project (CCP) representative [Visual Examination (VE) only]
- **($)** STATIONARY FIRE WATCH (greater than 300 PE-Ci equivalent combustible waste only) (SAC 5.10.1.7.2)

4.1 Planning and Coordination (continued)

[6] **IF** performing Section 10, WCG Waste Processing,
THEN:

[A] **ENSURE** that the waste containers to be processed have been evaluated in accordance with EP-DIV-AP-20098, LTP TRU Waste Remediation Safety Evaluation, and that a copy of the LTP Waste Remediation Safety Evaluation Data Sheet (EP-DIV-AP-20098 Attachment 1) has been obtained for each waste container to be processed.

[B] **INITIATE** a copy of Attachment 1, WCRRF WCG Waste Processing Data Sheet for each waste container to be processed, and **DOCUMENT** the following information:

- Parent Waste Container Number (record on each page of Attachment 1)
- Prohibited Items, if present
- Parent waste container RCRA Designations

[C] **ATTACH** a copy of the LTP Waste Remediation Safety Evaluation Data Sheet (EP-DIV-AP-20098 Attachment 1) to Attachment 1.

[7] **OBTAIN** a blank Administrative Control Lock Log Sheet form 10.4 of EP-DIV-AP-0117, lock, and key from the WCRRF Operations Center. (e.g., See Appendix 6, Administrative Control Lock Log Sheet)

[8] **ENSURE** that the TRU daughter waste container labels (e.g., Shorty barcode labels) have been obtained from the Waste Help Team (wastehelp@lanl.gov).

[9] **ENSURE** that beryllium-containing waste is identified and appropriately labeled before handling and that any additional controls are in place before processing.

4.2 Materials and Equipment

4.2.1 Special Tools and Equipment

NOTE *The list of special tools and equipment is not an all inclusive list and additional tools and equipment may be used as necessary.*

Waste Handling Technician or Supervision

[1] **ENSURE** that the following special tools and equipment are available, as required:

- Banding tool
- Cut resistant (e.g., HexArmor™, leather, or leather palm mechanics) gloves
- Cutting tool (e.g., utility knife or PVC cutter)
- Drum dolly
- Hacksaw and blades
- Lead blankets
- ML-2 drum lift hinge pin retaining clips (e.g., E-clips)
- Non-sparking hand drill (hand crank or electric) with a speed selector and drill bits
- Non-sparking tools for separating and processing waste
- Permanent marker
- Portable HEPA-filter exhaust system
- Removable lead glass windows
- Safety glasses with side shields
- Tools for separating and processing waste
- Two-wheel dolly
- WCATS mobile device
- WCG metal bucket

4.2.2 Consumables

NOTE *The list of consumables is not an all inclusive list and additional consumables may be used as necessary.*

Waste Handling Technician or Supervision

[1] **ENSURE** that the following consumables are available, as required:

- 3 Liters Carbon Spheroids or MET-L-X
- Bag-off bags (filtered or unfiltered)
- Banding buckles
- Banding material
- Binding ties
- Chemwipes or equivalent
- Drum labels
- Fantastik or equivalent
- Kitty Litter/Zeolite® absorbent
- Lead or lead equivalent WCG gloves
- Litmus paper
- Nitrile gloves
- Plastic waste bags
- Tape (duct or vinyl)
- Velcro®
- Wire rope inspection cloth (e.g., cheese cloth)

4.2.3 Measurement and Test Equipment (M&TE)

Waste Handling Technician or Supervision

[1] **ENSURE** that the following measuring and test equipment are available, as required:

- Platform scale
- WCG scale

4.3 Field Preparation

Waste Handling Technician or Supervision

[1] **($) IF** performing any section except Section 8.1, Bag On Daughter Drum, Bagport, or Gloveport, without bagging in waste material,
THEN ENSURE that Building TA-50-69 is in the OPERATION MODE in accordance with EP-WCRR-FO-DOP-0201, WCRRF and Building TA-50-69 TSR Mode Change, and **CHECK** (√) OPERATIONS on Attachment 1, WCRRF WCG Waste Processing Data Sheet. (TSR 1.2)

4.3 Field Preparation (continued))

[2] **($) IF** performing Section 8.1,
AND waste material is **NOT** being introduced into the WCG,
THEN ENSURE that Building TA-50-69 is in the OPERATION or WARM STANDBY MODE in accordance with EP-WCRR-FO-DOP-0201, and **CHECK** (√) OPERATION or WARM STANDBY on Attachment 1. (TSR 1.2)

[3] **ENSURE** that the WCRRF Operations Center has authorized the performance of this procedure.

[4] **IF** performing one of the following sections:
Section 5, Parent Waste Container Preparation,
Section 6, WCG Parent Drum Loading/Unloading,
Section 10, WCG Waste Processing,
THEN:

[A] **ENSURE** that the weekly Platform Scale calibration verification has been performed in accordance with EP-WCRR-WO-DOP-0239, Verifying WCRRF Scales.

[B] **RECORD** the platform scale equipment/serial number and calibration due date on Attachment 1.

[C] **IF** the platform scale exceeds the calibration due date,
THEN NOTIFY the WCRRF Operations Center of the discrepancy, and
REQUEST the applicable actions.

[5] **IF** performing Section 10,
THEN:

[A] **ENSURE** that preprinted Item Identification Number (ID) labels and Poly-Chlorinated Biphenyl (PCB) Item Number labels are obtained from the Waste Management Coordinator.

[B] **($) ENSURE** that WCG contains three 1-Liter containers of carbon spheroids or MET-L-X, and **DOCUMENT** (initials and date) on Attachment 1.
(SAC 5.10.1.7.1)

4.3 Field Preparation (continued)

[C] **ENSURE** that the required number of daughter drums have been prepared in accordance with EP-WCRR-WO-DOP-0221, Preparing and Closing 55-gal Daughter Drum Assemblies.

[D] **REVIEW** Appendix 2, WCRRF Allowable Container Types For Remediation.

[E] **ENSURE** that Prohibited Item Collection Containers (aerosol and pressurized cylinders) or previously initiated Prohibited Item Collection Containers are available, as necessary, and that the Prohibited Item Collection Containers (Holdup Container) have been generated in WCATS and have been labeled.

NOTE *The daughter waste containers (e.g., 55-gal drums) may be prepared in advance of the waste container remediation activity and at a location other than the processing area. As such, the lids may be temporarily placed on the daughter waste containers to allow them to be safely transported to the processing area.*

[F] **ENSURE** that a sufficient number of daughter waste containers (e.g., 55-gal drums) are available, as necessary.

[6] **($) IF** performing Section 10,
AND the parent container TRU-waste material inventory value is greater than 300 PE-Ci equivalent combustible waste,
THEN ENSURE a STATIONARY FIRE WATCH has been established, and
DOCUMENT (Initial and Date) on Attachment 1. (SAC 5.10.1.7.2)

NOTE *The Technical Safety Requirements for WCRRF specify that a critical lift plan is required for lifts and forklift movements involving DEGRADED or LOSS OF INTEGRITY drums. Additionally a critical lift plan is required in accordance with the requirements of P101-25, Cranes, Hoists, Lifting Devices, and Rigging Equipment, such as when the weight of the parent drum is greater than 75% of the WCG drum lift rated capacity (624 lb x .75 = 468 lb).*

[7] **IF** performing Section 6,
THEN:

[A] **DETERMINE** whether the parent drum is a degraded or loss of integrity drum, or whether the parent drum weight is greater than 468 lb but less than or equal to 624 lb, and **CHECK** (√) YES or NO on Attachment 1.

4.3 Field Preparation (continued)

NOTE 1 *The Person-in-Charge (PIC) appointed for the safe handling of critical loads and for the safe handling of non-critical items in, around, or above spaces in which critical items are located* ***SHALL*** *be trained in accordance with P101-25.*

NOTE 2 *WCRRF drum lift operations is a pre-engineered lift in accordance with P101-25 and require a Critical Lift Plan when the lift satisfies the critical lift criteria of P101-25. Critical lifts executed by LANL personnel* ***SHALL*** *be performed and documented in accordance with Appendix 1, WCRRF Drum Lift Critical Lift Plan (P101-25, Attachment B). Subcontract personnel* ***SHALL*** *comply with the safety and health requirements documented in contractual agreements with LANL and may use the information provided in Appendix 1.*

NOTE 3 *The WCG Drum Lift is a pre-engineered and an approved critical lift. Some items in Appendix 1,* are already pre-populated, therefore the PIC will be required to complete the remaining items and sections left blank.

NOTE 4 *Appendix 1 is a pre-engineered critical lift plan for degraded or loss of integrity drums. Once the Appendix 1 has been completed for the first waste container, the paperwork may be duplicated for each additional lift with the following conditions:*

- The critical lifts performed are in the same shift
- The critical lift team members do not change (i.e., PIC, Crane Operator)
- The critical lift activities performed are the same for each drum handled as specified in Appendix 1

[B] **($) IF** the parent drum is a degraded or loss of integrity drum, (AC 5.10.3.1) **OR** the parent drum weight is greater than 468 lb but less than or equal to 624 lb, **THEN GENERATE** a critical lift plan.

4.3 Field Preparation (continued)

WARNING

1. **Performance of a pre-operational inspection of the WCG drum lift (Form 1489), SHALL ensure that the entire length of the drum lift cable is inspected. This will require that the drum lift be exercised from the full up to the full down positions.**

2. **The drum lift pendant operator is to announce operation of the lift before raising or lowering the drum and all personnel are to stand clear and to the side of drum movement in order to prevent personnel injuries.**

NOTE *The inspection criteria identified as N/A on Appendix 3, Example Preoperational Inspection record for Overhead Cranes and Hoists, are not required to be performed.*

[C] **IF** performing Section 6 for the first time for the day,
THEN PERFORM a pre-operational inspection of the WCG drum lift components in accordance with P101-25 by completing the applicable sections of Form 1489.

[8] **IF** performing WCG operations (e.g., Section 10, WCG Waste Processing),
THEN:

[A] **REVIEW** the WCG glove change due date marked on all WCG gloves.

[B] **IF** the WCG glove change due date marked on the WCG glove has been exceeded,
OR a WCG glove or bag-in/bag-out bag fails the inspection,
THEN:

[a] **STOP** operations.

[b] **IDENTIFY** the WCG glove or bag-in/bag-out bag as out-of-service.

[c] **NOTIFY** supervision and an RCT for the applicable actions in accordance with EP-DIV-AP-20047.

4.3 Field Preparation (continued)

NOTE *WCG gloves with a glove change due date that has been exceeded are not required to be inspected in accordance with the following step.*

[C] **INSPECT** the internal and external surfaces of each WCG glove and bag-in/bag-out bag for the following:

- Cracks
- Cuts
- Discoloration
- Exposed color of the lead liner, if present
- Layer separations
- Natural degradation
- Obvious physical signs of deterioration
- Punctures
- Radiological contamination (internal only)
- Splits
- Stiffness
- Surface deposits/debris

[D] **CHECK** (√) SAT or UNSAT on Attachment 1, and **DOCUMENT** the completion of the WCG glove inspection by signing and dating on Attachment 1.

[9] **ENSURE** that glovebox inspections have been completed in accordance with EP-DIV-AP-20047.

[10] **IF** Section 10.4, Waste Splitting Activities, is to be performed,
THEN ENSURE that Low-Level Waste Characterization personnel are available, as necessary.

[11] **IF** this procedure is being performed as a High/Complex Hazard activity as determined in Section 4.1, Planning and Coordination,
THEN:

[A] **ENSURE** that the temporary lead glass windows have been attached (e.g., Velcro®) to the inside of the applicable WCG windows.

[B] **ENSURE** that lead or lead equivalent gloves have been installed on the WCG gloveports.

[C] **ENSURE** that lead blankets have been placed along the bottom of the WCG.

4.3 Field Preparation (continued)

NOTE 1 *The following step may be performed out of sequence and may be performed in Building TA-50-37 (Artic).*

NOTE 2 *The TRU DRUM PREPARATION task on the WCATS mobile device or desktop application may be performed in conjunction with the performance of the physical build of a POC.*

[12] **IF** a POC is to be used,
AND the POC is to be bagged onto the WCG,
THEN:

[A] **OBTAIN** a POC bag-on bag.

[B] **APPLY** vinyl tape to the POC bag-on bag, with a smear pad centered on the tape, over the filter.

[C] **INFLATE** the POC bag-on bag with air from a compressed air source.

[D] **INSPECT** the POC bag-on bag for damage, cuts, or leaks by looking, listening, and feeling.

[E] **STRETCH** the POC bag-on bag's bungee cord, and **INSPECT** the bungee cord for cuts or damage.

[F] **IF** the POC bag-on bag or bungee cord fails the inspection,
THEN:

[a] **IDENTIFY** (e.g., tag or mark) the failed item indicating that item is defective.

[b] **SEGREGATE** the failed item in order to prevent the item from being used.

4.3 Field Preparation (continued)

NOTE 1 *A Quality Assurance (QA) representative may be contacted for assistance with the NCR process.*

NOTE 2 *The NCR may be initiated at an operationally convenient time.*

[c] **ENSURE** that an NCR is initiated in accordance with P330-6, Nonconformance Reporting, as required.

[d] **REPLACE** the defective item.

[e] **GO** to Step 4.3[12][A].

NOTE *The following step may be performed out of sequence to allow for the bulk inspection of liners in order to improve operational efficiencies.*

[G] **OBTAIN** and **VISUALLY INSPECT** a POC plastic/cardboard liner ensuring the exterior surfaces are smooth.

[H] **IF** POC plastic/cardboard liner fails the inspection,
THEN:

[a] **IDENTIFY** (e.g., tag or mark) the POC plastic/cardboard liner indicating that the POC plastic/cardboard liner is defective.

[b] **SEGREGATE** the POC plastic/cardboard liner in order to prevent the item from being used.

NOTE 1 *A Quality Assurance (QA) representative may be contacted for assistance with the NCR process.*

NOTE 2 *The NCR may be initiated at an operationally convenient time.*

[c] **ENSURE** that an NCR is initiated in accordance with P330-6, Nonconformance Reporting, as required.

[d] **REPLACE** the POC plastic/cardboard liner.

[e] **GO** to Step 4.3[12][G].

4.3 Field Preparation (continued)

[I] **PLACE** the POC plastic/cardboard liner into the POC bag-on bag.

[J] **PLACE** the POC plastic/cardboard liner and bag into the POC pipe component.

[K] **ENSURE** that excess POC bag-on bag is placed inside of the POC pipe component.

[L] **PLACE** the POC pipe component lid on the POC pipe component and **TIGHTEN** the lid sufficiently to hold the lid on the POC pipe component.

[M] **PLACE** the POC drum lid on the POC drum and **TIGHTEN** the closure ringbolt sufficiently to hold the drum lid in place.

[13] **ENSURE** that the new daughter waste containers (e.g., POCs and 55-gal drums) have been created in WCATS desktop application using the TRU DRUM PREPARATION application and that the Shorty barcode labels have been applied to the new daughter waste containers (e.g., POCs and 55-gal drums) in accordance with EP-DIV-DOP-20043, LTP TRU Waste Container Labeling.

5. PERFORMANCE—PARENT WASTE CONTAINER PREPARATION

This section is a stand-alone section and may be performed independently of or in conjunction with other Performance sections.

NOTE 1 *Radiological surveys may be performed as determined necessary [e.g., by an RP representative (e.g., RCT)] anytime during the performance of this procedure.*

NOTE 2 *All manual drum movement will be performed in accordance with Appendix 7, Manual Drum Movements Special Instructions and EP-DIV-Policy-20057, EWMO Health and Safety Policy-Manual Movement.*

Waste Handling Technician

[1] **ENSURE** that the prerequisite actions have been completed.

NOTE *Steps 5.[2] through 5.[4] may be performed in Building TA-50-37 (Artic).*

[2] **OBTAIN** an unfiltered bag-off bag <u>or</u> a filtered bag-off bag, and **TAPE OVER** the inside and outside filter openings of a filtered bag-off bag, as applicable.

CAUTION

Care should be exercised when <u>not</u> to over inflate the filtered bag. Apply only enough air to inspect for leaks. (e.g., pins holes, leakage around filter attachment points). Failure to comply with this caution could lead to overstressing the filter and possible damage to the filtered bag.

[3] **INFLATE** the filtered or no filtered bagout bag carefully and slowly while sealing the bag (i.e. securing opening with hand).

[4] **INSPECT** the bag-off bag for damage or cuts examining by sight, sound, and feel.

[5] **IF** the bag-off bag does **NOT** hold the air,
THEN:

[A] **IDENTIFY** (e.g., tag or mark) the bag-off bag indicating that the bag-off bag is defective.

[B] **SEGREGATE** the bag-off bag in order to prevent the item from being used.

5. PERFORMANCE—PARENT WASTE CONTAINER PREPARATION (continued)

NOTE *The NCR may be initiated at a time that is operationally convenient.*

[C] **ENSURE** that an NCR is initiated in accordance with P330-6, Nonconformance Reporting.

[D] **GO** to Step 5.[2].

[6] **TAPE** the drum closure ringbolt in order to prevent tearing or cutting the unfiltered bag-on bag.

[7] **IF** the drum to be processed is **NOT** a degraded or loss of integrity drum, **THEN CUT** off the bottom of a bag-off bag approximately 27 to 30 inches from the bottom of the bag-off bag in order to create a bag-off sleeve.

[8] **SLIDE** the bag-off bag over the top of the drum down to between the second and third rolling hoops (from the top) ensuring that the first and second rolling hoops (from the top) are covered.

NOTE *Enough room must be left between the tape and the drum closure ringbolt in order for the drum closure ring to be removed without damaging the bag-on bag.*

[9] **WRAP** tape (vinyl or duct) around the container so that the bag-off bag is tightly bound approximately halfway between the second and third rolling hoops near the top of the drum and overlapping the bag-off bag onto the drum.

[10] **ENSURE** that the drum wrapping (e.g., tape and bag-off bag) is airtight and no air pockets are present.

WARNING

Placement of duct tape below top rolling hoop may vary to ensure the surface area selected is free of abnormalties (e.g., dents, scrapes). Failure to comply with this could lead to an improper seal and potential unwanted radiological contamintation.

[11] **IF** the abnormalities (e.g., dents, scrapes) are discovered above the top rolling hoop, **THEN WRAP** duct tape around the drum just below the top rolling hoop on a surface that does not container abnormalities (e.g. dents, scrapes.

5. PERFORMANCE—PARENT WASTE CONTAINER PREPARATION (continued)

[12] **WRAP** duct tape around the drum just above the top rolling hoop on a surface that does not contain abnormalities (e.g., dents, scrapes).

CAUTION

Improper placement of the banding material over the drum hoop may result in movement and banding material slipping down the drum. Do not place banding material over drum hoop.

[13] **PLACE** banding material around the drum over the installed duct tape and **ENSURE** banding material is not placed over the drum hoop.

[14] **TIGHTEN** and **BUCKLE** the banding material with a banding tool.

[15] **COVER** the banding buckle with duct tape to prevent bag tears.

[16] **ROLL DOWN** the remaining bag-off bag around drum.

NOTE *The following two steps may be performed just before loading the drum on the WCG drum lift.*

[17] **IF** items (e.g., gloves or tools) are to be bagged into the WCG with the Prepared Parent Drum,
THEN SECURE the items to the top of the Prepared Parent Drum.

[18] **WEIGH** the Prepared Parent Drum with items secured to the drum top, as applicable, and **RECORD** the Prepared Parent Drum Weight on Attachment 1.

[19] **IF** the Prepared Parent Drum Weight is greater than or equal to 624 lb,
THEN:

[A] **STOP** the work activity.

NOTE *The WCRRF Operations Center notifies the Transuranic (TRU) Waste Disposition Project (WDP) Operations Manager (OM) or designee and the Shift Operations Supervisor (SOS) of the discrepancy.*

[B] **NOTIFY** the WCRRF Operations Center of the discrepancy.

5. PERFORMANCE—PARENT WASTE CONTAINER PREPARATION (continued)

[C] **REQUEST** the applicable actions from the SOS or designee.

[20] **RECORD** the following information on the parent drum lid using a permanent marker:

- Parent drum number
- Parent drum weight
- Date
- Platform scale serial number
- Platform scale calibration due date

6. PERFORMANCE—WCG PARENT DRUM LOADING/UNLOADING

NOTE 1 *Radiological surveys may be performed as determined necessary [e.g., by an RP representative (e.g., RCT)] anytime during the performance of this procedure.*

NOTE 2 *All manual drum movement will be performed in accordance with Appendix 7, Manual Drum Movements Special Instructions and EP-DIV-Policy-20057, EWMO Health and Safety Policy-Manual Movement.*

6.1 WCG Drum Lift Daily Inspection

This sub-section is a stand-alone sub-section and may be performed independently of or in conjunction with other sub-sections.

This inspection is to be performed once each work day before the WCG drum lift is to be used to hoist a waste drum.

NOTE *The individual performing the WCG drum lift inspection **SHALL** be at a minimum a certified Qualified Crane Operator.*

Waste Handling Technician

[1] **OBTAIN** and **REVIEW** the previously completed copy of Attachment 2, WCRRF WCG Drum Lift Inspection Data Sheet.

[2] **OBTAIN** a new copy of attachment 2, and **RECORD** the inspection date on Attachment 2.

[3] **RECORD** any previously identified wire rope damage in Table 3-1 or Table 3-2, or N/A as applicable, on Attachment 2, and **CHECK** (√) applicable box in the Previously Identified Damage column in Table 3-1 or Table 3-2, as applicable, on Attachment 2.

[4] **RECORD** the number of threads exposed out the end of the shaft bolt locknut on the upper, middle, and lower pulley shaft bolts from the previous inspection on Attachment 2.

6.1 WCG Drum Lift Daily Inspection (continued)

[5] **DETERMINE** and **RECORD** on Attachment 2 the current number of threads exposed out the end of the shaft bolt locknut on the upper, middle, and lower pulley shaft bolts (see illustration below).

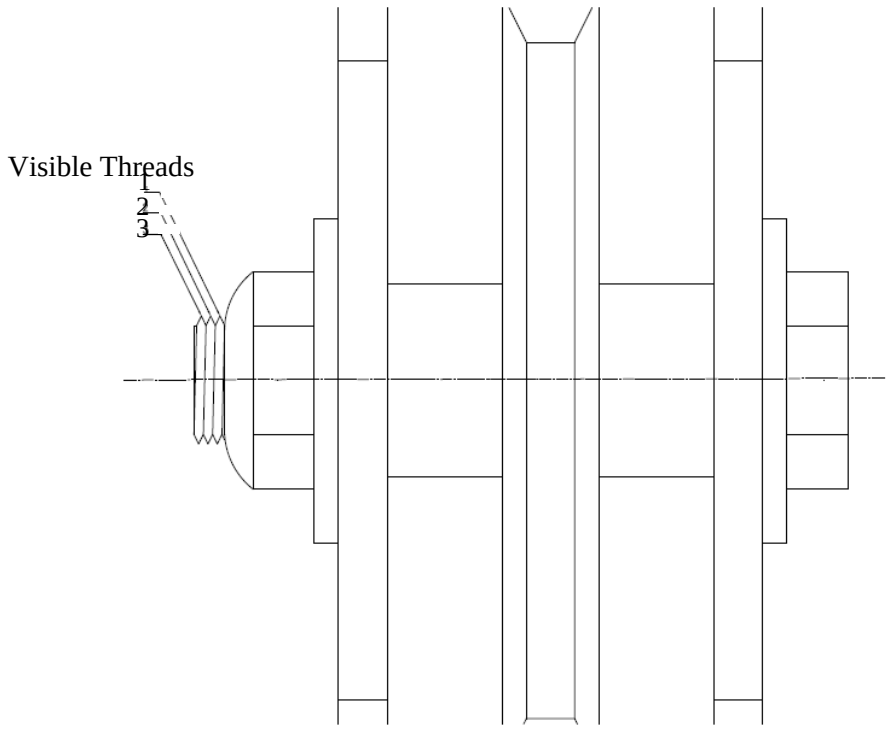

[6] **DETERMINE** whether the shaft bolt end is flush with or extends out of the outer end of the shaft bolt locknut, and **CHECK** (√) YES or NO on Attachment 2.

[7] **INSPECT** the upper, middle, and lower pulley shaft bolts for any signs of wear between the shaft bolt and the support flanges (e.g., shaft not perpendicular to the flange plate), and **CHECK** (√) SAT or UNSAT for each shaft bolt on Attachment 2.

WARNING

The drum lift pendant operator is to announce operation of the lift before raising or lowering the drum and all personnel are to stand clear and to the side of drum movement in order to prevent personnel injuries.

[8] **ENSURE** that the drum trolley is in the full-down position.

6.1 WCG Drum Lift Daily Inspection (continued)

WARNING

Cut resistant (e.g., leather or leather palm mechanics) gloves are to be worn while inspecting the drum trolley wire rope and the cloth is to be held loosely in order to prevent skin punctures resulting from broken wires of the wire rope.

[9] **INSPECT** the entire length of the exposed, upper wire rope from the top of the drum trolley to the wire rope hoist drum by loosely gripping the cloth (e.g., cheese cloth) while sliding the cloth along the length of the wire rope, and **CHECK** (√) YES or NO to indicate whether any new damage is identified on Attachment 2 to indicate whether any upper wire rope damage is discovered.

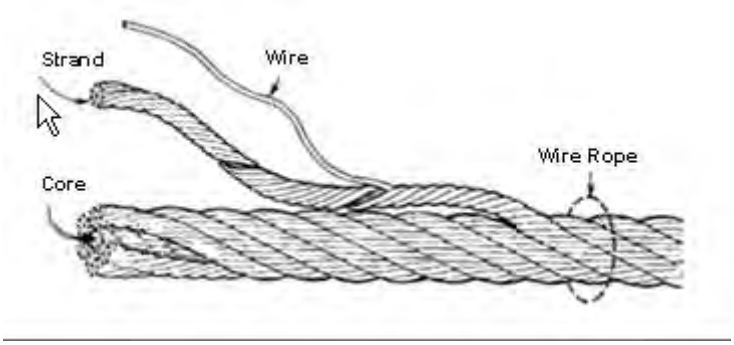

[10] **IF** the cloth snags on the wire rope,
THEN VISUALLY INSPECT the wire rope snag location for damage, and **DOCUMENT** the results of the inspection including the location of the damage in Table 3-1, Upper Wire Rope Damage, on Attachment 2.

WARNING

The drum lift pendant operator is to announce operation of the lift before raising or lowering the lift and all personnel are to stand clear and to the side of drum movement in order to prevent personnel injuries.

[11] **ENSURE** that the drum trolley is in the full-up position.

6.1 WCG Drum Lift Daily Inspection (continued)

WARNING

Cut resistant (e.g., leather or leather palm mechanics) gloves are to be worn while inspecting the drum trolley wire rope and the cloth is to be held loosely in order to prevent skin punctures resulting from broken wires of the wire rope.

[12] **INSPECT** the entire length of the exposed, lower wire rope from the top of the drum trolley to the wire rope hoist by loosely gripping the cloth (e.g., cheese cloth) while sliding the cloth along the length of the wire rope, and **CHECK** (√) YES or NO to indicate whether any new damage is identified on Attachment 2 to indicate whether any lower wire rope damage is discovered.

[13] **IF** the cloth snags on the wire rope,
THEN VISUALLY INSPECT the wire rope snag location for damage, and **DOCUMENT** the results of the inspection including the location of the damage in Table 3-2, Lower Wire Rope Damage, on Attachment 2.

[14] **IF** there are six randomly distributed broken wires in one rope lay or three broken wires in one strand in one rope lay,
THEN:

[A] **CHECK** (√) UNSAT for the wire rope inspection on Attachment 2.

[B] **GO** to Step 6.1[16].

[15] **CHECK** (√) SAT for the wire rope inspection on Attachment 2.

[16] **IF** UNSAT was checked (√) for any of the WCG inspections,
THEN:

[A] **STOP** the work activity.

[B] **RECORD** Printed name, signature, Z# and **DATE** on Attachment 2.

NOTE *The WCRRF Operations Center notifies the WDP SOM or designee and the Cognizant System Engineer (CSE) of the discrepancy.*

[C] **NOTIFY** the WCRRF Operations Center of the discrepancy.

[D] **DOCUMENT** the notifications and discrepancies in the Comments section of Attachment 2.

6.2 Parent Drum Loading

This sub-section is a stand-alone sub-section and may be performed independently of or in conjunction with other sub-sections.

Waste Handling Technician

[1] **ENSURE** that the prerequisite actions have been completed.

RCT

[2] **PERFORM** radiological surveys as necessary during the waste container handling evolutions.

Waste Handling Technician

[3] **IF** radiological contamination is detected,
THEN FOLLOW the instructions of the RCT.

[4] **RECORD** the Processing Date (current date) on Attachment 1.

[5] **IF** lead blankets are to be used as radiological shielding on the parent drum,
THEN:

[A] **WEIGH** the lead blankets, as necessary, and **RECORD** the lead blanket's weight on Attachment 1.

[B] **SUM** the Lead Blanket Weights and the Prepared Parent Drum Weight, and **RECORD** the Total Prepared Parent Drum Weight (drum and lead blankets) on Attachment 1.

[C] **GO** to Step 6.2[7].

[6] **RECORD** the Total Prepared Parent Drum Weight (parent drum weight) on Attachment 1.

[7] **($) DETERMINE** whether the Total Parent Drum Weight is less than 624 lb, and **CHECK** (√) SAT or UNSAT for the Total Parent Drum weighing less than 624 lb on Attachment 1. (SR 4.5.1)

6.2 Parent Drum Loading (continued)

[8] **IF** the Total Parent Drum Weight is greater than or equal to 624 lb,
THEN:

[A] **STOP** the work activity.

NOTE *The WCRRF Operations Center notifies the TRU WDP OM or designee and the SOS of the drum status.*

[B] **NOTIFY** the WCRRF Operations Center, of the drum status.

[C] **REQUEST** the applicable actions from the SOS or designee.

NOTE *P101-25 provides instructions for a conducting a critical lift.*

[9] **($) IF** the prepared parent drum is a degraded or loss of integrity drum, (AC 5.10.3.1)
OR the parent drum weight is greater than 468 lb,
THEN ENSURE that the prepared parent drum is loaded in compliance with Appendix 1, or P101-25 Attachment B Critical Lift plan and this sub-section.

[10] **ENSURE** that the drum lift key has been obtained from the key box.

[11] **ENSURE** that the drum lift key has been inserted, and has been turned to ON in order to establish power to the drum lift.

[12] **ENSURE** that the drum lift has been lowered to the lower limit switch or until the bellyband of the lift cradle can grasp the drum evenly using the drum lift pendent.

[13] **IF** the WCG parent drum port cover is present,
THEN REMOVE the WCG parent drum port cover, and **SET** the WCG parent drum port cover aside.

[14] **ENSURE** that respiratory protection is worn as required by the applicable RWP.

[15] **PERFORM** a visual inspection of the drum lid ringbolt assembly to determine if the drum lid ringbolt is damaged, degraded, or seized in the drum lid ring lugs.

6.2 Parent Drum Loading (continued)

[16] **IF** the ringbolt is damaged, degraded or seized in the drum lid ring lugs,
THEN:

Waste Handler Technician One

[A] **NOTIFY** Supervision for guidance and direction.

[B] **OBTAIN** approval from SOS to cut bolt.

[C] **PREP** parent and area around drum lid ring lugs as directed by RCT.

[D] **PLACE** a piece of hard plastic or Teflon behind the drum ring-bolt assembly and the drum as a barrier to protect from potential nicks or cuts to liners that may be encountered during sawing of drum lid ringbolt.

Waste Handler Technician Two

[E] **SLOWLY CUT** the drum lid ringbolt between the drum ring lugs ½ way through using a hacksaw.

[F] **GO** to Step 6.2[18].

[17] **LOOSEN** the drum closure ringbolt jam nut, as necessary, <u>without loosening the closure ringbolt</u>.

NOTE *The retaining clip (e.g., E-clip) must be an ML-2 component.*

[18] **INSPECT** the four drum lift hinge pins to determine whether all hinge pins have retaining clips (e.g., E-clips) attached to the bottom of the hinge pins and **CHECK** SAT or UNSAT on Attachment 1.

[19] **IF** a retaining clip is missing from a hinge pin,
THEN:

[A] **INSPECT** the hinge pin for damage and **DOCUMENT** deficiencies including hinge pin location in the Comments section of Attachment 1.

[B] **IF** the hinge pin is damaged or the hinge pin does **NOT** completely pass through the hinge,
THEN:

6.2 Parent Drum Loading (continued)

[a] **STOP** the work activity.

[b] **NOTIFY** the WCRRF Operations Center of the hinge pin status.

[c] **REQUEST** the applicable actions from the SOS or designee, and **DOCUMENT** the condition and actions taken in the Comments section of Attachment 1.

[C] **ATTACH** a retaining clip to the hinge pin, ensuring that the clip is properly seated in the groove at the bottom of the hinge pin.

[D] **DOCUMENT** initials, Z number, and date or N/A on Attachment 1 to indicate that the retaining clip was replaced.

[20] **POSITION** the prepared parent drum on the drum lift with the prepared parent drum closure ringbolt accessible for lid removal when the drum closure ring is inside of the WCG.

[21] **CLOSE** and **SECURE** the bellyband on the prepared parent drum, ensuring that the bag-off sleeve does not get caught on the bellyband.

[22] **ENSURE** that the retaining clips are properly seated in the groove at the bottom of the hinge pins.

WARNING

Failure to ensure the Trolley Clamp is positioned next to the WCG prior to lowering or raising the drum lift could lead to equipment damage and personnel injury.

[23] **IF** the Trolley Rail clamp is to be used,
AND is not on the drum rail,
THEN PLACE the trolley rail clamp on the rail and **POSITION** next to the WCG.

[24] **RAISE** the prepared parent drum to the WCG parent drum port using the drum lift pendent, leaving an adequate gap (approximately 12 in.) to attach the bag-off sleeve to the WCG parent drum port.

[25] **BAG ON** the prepared parent drum to the WCG parent drum port in accordance with section 7.1, Parent Drum Bag On, and **RETURN** to the following step.

6.2 Parent Drum Loading (continued)

WARNING

Downward movement of the parent drum could result in the drum bag-off bag separating from the WCG drum port and resulting in the spread of radiological contamination.

[26] **TURN** the drum lift key to OFF, and **REMOVE** the drum lift key, as applicable.

[27] **PLACE** the drum lift key in the key box, as applicable.

[28] **IF** the parent drum is to remain attached to the WCG overnight,
THEN OBTAIN the Environmental and Waste Management Facility Operations-Facility Operations Director (EWMO-FOD) or Designee (i.e., Operations Manager) approval to leave the parent drum attached to the WCG overnight, and **DOCUMENT** the approval on Attachment 1.

[29] **IF** the EWMO-FOD does **NOT** approve leaving a parent drum attached to the WCG overnight,
THEN ENSURE that the parent drum is removed before the end of the work day.

[30] **PROCESS** the waste in the parent drum in accordance with Section 10, WCG Waste Processing.

6.3 Parent Drum Unloading

This sub-section is a stand-alone sub-section and may be performed independently of or in conjunction with other sub-sections.

Waste Handling Technician

[1] **ENSURE** that the prerequisite actions have been completed.

[2] **ENSURE** that the parent drum has been bagged off of the WCG in accordance with Section 7.2, Parent Drum Bag Off.

RCT

[3] **PERFORM** radiological surveys as necessary during the waste container handling evolutions.

6.3 Parent Drum Unloading (continued)

Waste Handling Technician

[4] **IF** radiological contamination is detected,
THEN FOLLOW the instructions of the RCT.

[5] **ENSURE** that the drum lift key has been obtained from the key box.

[6] **ENSURE** that the drum lift key has been inserted, and **TURN** the drum lift key to ON in order to establish power to the drum lift.

WARNING

The drum lift pendant operator is to announce operation of the lift before raising or lowering the drum and all personnel are to stand clear and to the side of drum movement in order to prevent personnel injuries.

[7] **POSITION** a drum dolly to receive the parent drum.

WARNING

Personnel SHALL <u>not</u> place any portion of the body (e.g., hands or arms) under an elevated load in order to prevent serious personal injury.

[8] **LOWER** the parent drum down onto the drum dolly using the drum lift pendent.

[9] **OPEN** the drum bellyband, and **UNLOAD** the parent drum from the drum lift.

[10] **IF** no additional drums are to be loaded with the WCG drum lift,
THEN:

[A] **SECURE** the drum bellyband.

[B] **RAISE** the drum lift to the desired height for stowing using the drum lift pendent.

[C] **TURN** the drum lift key to OFF, and **REMOVE** the drum lift key.

[D] **PLACE** the drum lift key in the key box.

6.3 Parent Drum Unloading (continued)

[11] **TAPE** the bagged off parent drum horsetail using vinyl tape.

[12] **PLACE** a layer of containment (e.g., the cutoff end of the parent drum bagged off bag or piece of plastic) over the drum lid.

[13] **TAPE** the entire parent drum lid using vinyl tape.

NOTE 1 *The RCRA Hazardous Waste Codes of a parent container do not apply to the empty parent container or the empty parent container label when the empty parent container satisfies the RCRA definition of an empty container in 40 CFR 261.7, Residues of Hazardous Waste in Empty Containers.* *http://edocket.access.gpo.gov/cfr_2009/julqtr/pdf/40cfr261.7.pdf*.

NOTE 2 *The following steps may be performed at a time that is operationally convenient.*

[14] **OVERPACK** the empty parent drum in accordance with EP-WCRR-WO-DOP-1197, WCRRF Loading/Unloading SWB or 85-gal Drum.

[15] **MOVE** the empty parent drum to a transportainer in accordance with EP-WCRR-WO-DOP-1199, WCRRF and Building TA-50-69 Waste Container Receipt, Movement, and Transfer.

[16] **ENSURE** that the Inventory Control Personnel have been notified that the empty parent drum has been removed from Building TA-50-69.

7. PERFORMANCE—WCG PARENT DRUM BAG-ON/BAG-OFF OPERATIONS

NOTE 1 *Radiological surveys may be performed as determined necessary [e.g., by an RP representative (e.g., RCT)] anytime during the performance of this procedure.*

NOTE 2 *All manual drum movement will be performed in accordance with Appendix 7, and EP-DIV-Policy-20057, EWMO Health and Safety Policy-Manual Movement.*

7.1 Parent Drum Bag On

This sub-section is a stand-alone sub-section and may be performed independently of or in conjunction with other sub-sections.

Waste Handling Technician

[1] **ENSURE** that the prerequisite actions have been completed.

[2] **WEAR** respiratory protection as required by the applicable RWP.

RCT

[3] **PERFORM** radiological surveys as necessary during the waste container handling evolutions.

Waste Handling Technician

[4] **IF** radiological contamination is detected,
THEN FOLLOW the instructions of the RCT.

[5] **ENSURE** the parent drum has been loaded onto the WCG in accordance with Section 6.2, Parent Drum Loading.

[6] **ENSURE** that the WCG has been wiped down to reduce radiological contamination.

[7] **SET UP** a portable HEPA-filter exhaust system (MAC-21) in order to increase local airflow at the site of the horsetail during the cutting operation.

[8] **REMOVE** the retaining band from the WCG parent drum port bag-off stub.

[9] **VISUALLY INSPECT** the WCG parent drum port bag-off stub for damage (e.g., tears).

7.1 Parent Drum Bag On (continued)

[10] **IF** the WCG parent drum port bag-off stub is damaged (e.g., tears),
THEN:

[A] **REPAIR** the damage (e.g., tears) using vinyl tape.

[B] **REQUEST** an RCT survey for radiological contamination.

[C] **IF** radiological contamination is detected,
THEN FOLLOW the instructions of the RCT.

[11] **SLIDE** the bag-off stub down to the port opening side of the ring closest to the WCG.

[12] **SWIPE** around the WCG parent drum port with a maslin smear, and **REQUEST** an RCT monitor the swipe for radiological contamination.

[13] **IF** radiological contamination is detected,
THEN FOLLOW the instructions of the RCT.

NOTE *The new bag-on bag is attached to the parent drum.*

[14] **SLIDE** the new bag-on bag over the old bag-on bag stub to the inner ring as close as possible to the WCG.

[15] **APPLY** vinyl tape to the new bag-on bag where the retaining band buckle is to be placed.

[16] **SECURE** the new bag-on bag with the retaining band.

[17] **REMOVE** the bag-off stub from the WCG parent drum port, and **DROP** the bag-off stub into the glovebox.

7.1 Parent Drum Bag On (continued)

WARNING

The drum lift pendant operator is to announce operation of the lift before raising or lowering the drum and all personnel are to stand clear and to the side of drum movement in order to prevent personnel injuries.

[18] **ALTERNATELY RAISE** the parent drum and **GUIDE** the bag-on bag to prevent damage to the bag-on bag until the parent drum has been raised to the upper limit switch or until the drum is adequately inserted.

NOTE *The Trolley Rail Clamp is used at the discretion of the PIC, and/or when processing heavy drums to act as a rail stop to restrict forward drum movement when removing heavy items from drum into glovebox.*

[19] **IF** the Trolley Rail Clamp is to be used,
THEN:

[A] **SLIDE** the Trolley Rail Clamp against the drum trolley rail assembly next to the lifting fixture.

[B] **TIGHTEN** the Trolley Rail clamp handle clockwise to secure the clamp against the drum trolley.

7.2 <u>Parent Drum Bag Off</u>

This sub-section is a stand-alone sub-section and may be performed independently of or in conjunction with other sub-sections.

Waste Handling Technician

[1] **ENSURE** that the prerequisite actions have been completed.

[2] **WEAR** respiratory protection as required by the applicable RWP.

RCT

[3] **PERFORM** radiological surveys as necessary during the waste container handling evolutions.

7.2 Parent Drum Bag Off (continued)

Waste Handling Technician

[4] **IF** radiological contamination is detected,
THEN FOLLOW the instructions of the RCT.

[5] **IF** Trolley Rail Clamp was used,
THEN LOOSEN handle counterclockwise and **SLIDE** the Trolley Rail Clamp away from the drum trolley (towards the WCG).

[6] **PLACE** the drum lid and drum closure ring assembly on the parent waste drum.

[7] **IF** the parent drum closure ring **CANNOT** be properly attached to the parent drum,
AND the parent drum is empty,
THEN:

[A] **AFFIX** the closure ring, if possible, to the parent drum and **TAPE** the parent drum lid onto the drum using vinyl tape or equivalent.

[B] **GO** to Step 7.2[11].

NOTE *The removal of a parent drum from the WCG which contains waste material must be performed as a critical lift.*

[8] **IF** the parent drum closure ring **CANNOT** be properly attached to the parent drum,
AND the parent drum contains waste material,
THEN:

[A] **STOP** the activity and place waste material in a safe configuration (e.g., cover with a fire blanket).

[B] **NOTIFY** supervision and the WCRRF Operations Center of the discrepancy and **REQUEST** the applicable actions.

[9] **ENSURE** that the drum closure ringbolt jam nut is tightened against the non-threaded lug of the drum closure ring.

[10] **ENSURE** that duct tape has been placed on the drum closure ringbolt in order to prevent damage to the bag-off sleeve.

[11] **ENSURE** that the WCG has been wiped down to reduce radiological contamination.

7.2 Parent Drum Bag Off (continued)

[12] **SET UP** a portable HEPA-filter exhaust system (MAC-21) to increase local airflow at the site of the horsetail during the cutting operation.

[13] **OBTAIN** the drum lift key from the key box, as applicable.

[14] **INSERT** the drum lift key, and **TURN** the drum lift key to ON in order to establish power to the drum lift, as applicable.

WARNING

The drum lift pendant operator is to announce operation of the lift before raising or lowering the drum and all personnel are to stand clear and to the side of drum movement in order to prevent personnel injuries.

[15] **LOWER** the parent drum sufficiently to create a horsetail using the drum lift pendent.

[16] **INSPECT** the bag-off bag for damage (e.g., tears).

[17] **IF** bag-off bag is damaged (e.g., tears),
THEN:

[A] **REPAIR** the damage (e.g., tears) using vinyl tape.

[B] **REQUEST** an RCT survey for radiological contamination.

[C] **IF** radiological contamination is detected,
THEN FOLLOW the instructions of the RCT.

[18] **MIST** inside of the bag-off bag with spray cleaner and **RUB** the bag-off bag together to ensure the complete coverage of the spray cleaner in order to control contamination.

[19] **SQUEEZE** as much air as possible out of the bag-off bag.

[20] **GATHER** the bag-off bag and **COMPRESS** the bag-off bag in order to create a horsetail approximately 8 to 10 in. long.

[21] **TIGHTLY SECURE** the horsetail using one layer of filament and two layers of vinyl tape.

7.2 Parent Drum Bag Off (continued)

[22] **FIRMLY ATTACH** two binding ties near the center of the horsetail, approximately 6 in. apart.

[23] **IF** bagging off the last parent drum for the work day,
THEN FIRMLY ATTACH a second binding tie approximately 2 in. from the center of the horsetail on the WCG side of the horsetail.

NOTE *The excess part of the binding tie protruding through the binding tie latch is not to be cut off.*

[24] **COVER** the attached binding ties with vinyl tape.

Waste Handling Technician Three

[25] **POSITION** the horsetail cutters between the binding ties of the horsetail.

Waste Handling Technician One

[26] **GRASP** the top of horsetail.

Waste Handling Technician Two

[27] **GRASP** the bottom of horsetail.

WARNING

Extremities SHALL not be placed inside the jaws of the cutting tool in order to prevent personnel injury due to pinching.

Waste Handling Technician Three

[28] **CUT** the horsetail between the binding ties.

Waste Handling Technician One and Two

[29] **SIMULTANEOUSLY COVER** the cut stubs of the bag-off bag with vinyl tape.

[30] **ENSURE** that the cut-stubs have been covered with a final layer of vinyl tape, as directed by an RCT.

7.2 Parent Drum Bag Off (continued)

NOTE 1 *Used cheesecloth are to be disposed of as compactable waste or in an empty daughter as waste added in process to be bagged on the WCG.*

NOTE 2 *The following step may be performed out of sequence.*

Waste Handling Technician Three

[31] **WIPE** down the cutters used to cut the horsetail, place the cutters in a holder, and place the cutters in the designated staging area.

NOTE *Used cheesecloth are to be disposed of as compactable waste or in an empty daughter as waste added in process to be bagged on the WCG*

Waste Handling Technician

[32] **DECONTAMINATE**, as necessary, in accordance with RCT instructions.

[33] **REMOVE** the empty parent drum from the WCG drum lifting device in accordance with Section 6.3, Parent Drum Unloading.

8. PERFORMANCE—WCG DAUGHTER DRUM, BAGPORT, OR GLOVEPORT BAG-ON/BAG-OFF OPERATIONS

NOTE 1 *Radiological surveys may be performed as determined necessary [e.g., by an RP representative (e.g., RCT)] anytime during the performance of this procedure.*

NOTE 2 *All manual drum movement will be performed in accordance with Appendix 7, and EP-DIV-Policy-20057, EWMO Health and Safety Policy-Manual Movement.*

8.1 Bag On Daughter Drum, Bagport, or Gloveport

This sub-section is a stand-alone sub-section and may be performed independently of or in conjunction with other sub-sections.

NOTE *This section provides instructions for bagging onto the WCG at a daughter drum port, bagport, or gloveport.*

Waste Handling Technician

[1] **ENSURE** that the prerequisite actions have been completed.

[2] **IF** a daughter drum is to be bagged onto the WCG,
THEN ENSURE that the daughter drum has been prepared in accordance with EP-WCRR-WO-DOP-0221.

[3] **WEAR** respiratory protection as required by the applicable RWP.

RCT

[4] **PERFORM** radiological surveys as necessary during the waste container handling evolutions.

Waste Handling Technician

[5] **IF** radiological contamination is detected,
THEN FOLLOW the instructions of the RCT.

[6] **ENSURE** that the WCG has been wiped down to reduce radiological contamination.

[7] **IF** directed by an RCT to establish a portable HEPA-filter exhaust system,
THEN SET UP a portable HEPA-filter exhaust system (MAC-21)in order to increase the local airflow at the site of the horsetail during the cutting operation.

[8] **REMOVE** the retaining band from the bag-off stub.

8.1 Bag On Daughter Drum, Bagport, or Gloveport (continued)

[9] **VISUALLY INSPECT** under the retaining band of the previous drum/bagport/gloveport bag-off stub for damage (e.g., tears).

[10] **IF** the previous drum/bagport/gloveport bag-off stub is damaged (e.g., tears),
THEN SEAL the damaged area with vinyl tape.

[11] **SLIDE** the bag-off stub down to the port opening side of the ring closest to the WCG.

[12] **SWIPE** around the port with a maslin smear, and **REQUEST** an RCT monitor the swipe for radiological contamination.

[13] **IF** radiological contamination is detected,
THEN FOLLOW the instructions of the RCT.

[14] **SLIDE** the new bag-on bag over the old bag-on bag stub to the inner ring as close as possible to the WCG.

[15] **ADHERE** vinyl tape to the new bag-on bag where the retaining band buckle is to be placed.

[16] **SECURE** the new bag with the retaining band.

[17] **REMOVE** the bag-off bag stub and drop the bag-off bag stub into the daughter drum/bagport bag/gloveport bag, as applicable.

[18] **IF** bagging on a daughter drum,
THEN:

[A] **MOVE** the drum from the drum dolly to the vertical lift table.

[B] **MANUALLY RAISE** the drum to the appropriate height.

8.2 Bag Off Daughter Drum

This sub-section is a stand-alone sub-section and may be performed independently of or in conjunction with other sub-sections.

NOTE *This section provides instructions for bagging off a daughter drum from the WCG.*

Waste Handling Technician

[1] **ENSURE** that the prerequisite actions have been completed.

[2] **WEAR** respiratory protection as required by the applicable RWP.

RCT

[3] **PERFORM** radiological surveys as necessary during the waste container handling evolutions.

Waste Operator

[4] **IF** radiological contamination is detected,
THEN FOLLOW the instructions of the RCT.

[5] **ENSURE** that the WCG has been wiped down to reduce radiological contamination.

[6] **SET UP** a portable HEPA-filter exhaust system (MAC-21) in order to increase the local airflow at the site of the horsetail during the cutting operation.

[7] **MANUALLY LOWER** the vertical lift table.

[8] **INSPECT** the bag-off bag for damage (e.g., tears).

[9] **IF** the bag-off bag is damaged (e.g., tears),
THEN:

[A] **REPAIR** the damage (e.g., tears) using vinyl tape.

[B] **REQUEST** an RCT survey for radiological contamination.

[C] **IF** radiological contamination is detected,
THEN FOLLOW the instructions of the RCT.

8.2 Bag Off Daughter Drum (continued)

WARNING

Proper lifting techniques and buddy system SHALL be used when moving a daughter drum from the lift table to the drum dolly in order to prevent personnel injury and to prevent separating the daughter drum bag-off bag from the WCG daughter drum port.

NOTE *A VersaLift may be used to assist the lifting of a drum off of the vertical lift table.*

[10] **MOVE** the drum from the vertical lift table to a drum dolly.

[11] **MIST** inside of the bag-off bag with spray cleaner and **RUB** the bag-off bag together to ensure the complete coverage of the spray cleaner in order to control contamination.

[12] **SQUEEZE** as much air as possible out of the bag-off bag.

[13] **GATHER** the bag-off bag.

[14] **ROTATE** the drum <u>or</u> **COMPRESS** the bag-off bag (as applicable) in order to create a horsetail approximately 8 to 10 in. long.

[15] **TIGHTLY SECURE** the horsetail using one layer of filament and two layers of vinyl tape.

[16] **FIRMLY ATTACH** two binding ties near the center of the horsetail, approximately 6 in. apart.

NOTE *The excess part of the binding tie protruding through the binding tie latch is <u>not</u> to be cut off.*

[17] **COVER** the attached binding ties with vinyl tape.

Waste Handling Technician Three

[18] **POSITION** the horsetail cutters between the binding ties of the horsetail.

Waste Handling Technician One

[19] **GRASP** top of horsetail.

8.2 Bag Off Daughter Drum (continued)

Waste Handling Technician Two

[20] **GRASP** the bottom of the horsetail.

WARNING

Extremities SHALL <u>not</u> be placed inside the jaws of the cutting tool in order to prevent personnel injury due to pinching.

Waste Handling Technician Three

[21] **CUT** the horsetail between the binding ties.

Waste Handling Technician One and Two

[22] **SIMULTANEOUSLY COVER** the cut stubs of the bag-off bag with vinyl tape.

[23] **ENSURE** that the cut-stubs have been covered with a final layer of vinyl tape, as directed by an RCT.

NOTE 1 *Used cheesecloth are to be disposed of as compactable waste or in an empty daughter as waste added in process to be bagged on the WCG*

NOTE 2 *The following step may be performed out of sequence.*

Waste Handling Technician Three

[24] **WIPE** down the cutters used to cut the horsetail, place the cutters in a holder, and place the cutters in the designated staging area.

Waste Handling Technician

[25] **IF** the bag-off bag has a filter that is covered with tape,
THEN:

[A] **REMOVE** the tape from bag filter.

[B] **REQUEST** an RCT survey for radiological contamination.

[C] **IF** radiological contamination is detected,
THEN FOLLOW the instructions of the RCT.

8.2 Bag Off Daughter Drum (continued)

[26] **IF** a POC was bagged off of the WCG,
THEN GO to Step 10.2[13].

NOTE 1 *Waste containers with liquids (any amount or configuration) that have not been solidified (absorbed) must be managed on secondary containment pallets and have a FREE LIQUID label affixed.*

NOTE *All parent drum RCRA Hazardous Waste Codes are not assigned to a daughter drum when the reason (item) for assigning a RCRA Hazardous Waste Code to the parent drum has not been placed into the daughter drum. The WMC can assist with assigning the appropriate RCRA Hazardous Waste Codes to a drum.*

[27] **CLOSE** the daughter drum in accordance with EP-WCRR-WO-DOP-0221.

[28] **ENSURE** that the Inventory Control Personnel have been notified that daughter drums and an empty parent drum have been generated in Building TA-50-69.

9. PERFORMANCE—ITEM BAG-IN/BAG-OUT OPERATIONS

NOTE *Radiological surveys may be performed as determined necessary [e.g., by an RP representative (e.g., RCT)] anytime during the performance of this procedure.*

9.1 WCG Item Bag-Out

This sub-section is a stand-alone sub-section and may be performed independently of or in conjunction with other sub-sections.

Waste Handling Technician

[1] **ENSURE** that the prerequisite actions have been completed.

[2] **WEAR** respiratory protection as required by the applicable RWP.

RCT

[3] **PERFORM** radiological surveys as necessary during the waste container handling evolutions.

Waste Handling Technician

[4] **IF** radiological contamination is detected,
THEN FOLLOW the instructions of the RCT.

[5] **ENSURE** that a portable CAM is placed in the vicinity of the filtered bagout bag during WCG operations as directed by RP-1.

[6] **IF** a bag is required on the WCG port,
THEN:

[A] **ENSURE** that the WCG has been wiped down to reduce radiological contamination.

[B] **SET UP** a portable HEPA-filter exhaust system (MAC-21) and elephant trunk as close as possible to the filtered bagout bag in order to increase the local airflow at the site of the horsetail during the cutting operation.

NOTE *Glovebox negative pressure **SHALL** be used to the extent possible in order to remove excess air from the filtered bag-out bag during bagout operations.*

[C] **REMOVE** the retaining band from the drum/bagport/gloveport bag-out stub.

9.1 WCG Item Bag-Out (continued)

[D] **VISUALLY INSPECT** under the retaining band of the previous drum/bagport/gloveport bag-out stub for damage (e.g., tears).

[E] **IF** the previous drum/bagport/gloveport bag-out stub is damaged (e.g., tears), **THEN SEAL** the damaged area with vinyl tape.

[F] **SLIDE** the new bag-on bag over the old bag-on bag stub to the inner ring as close as possible to the WCG.

[G] **SWIPE** around the port with a maslin smear, and **REQUEST** an RCT monitor the swipe for radiological contamination.

[H] **IF** radiological contamination is detected,
THEN FOLLOW the instructions of the RCT.

[I] **SLIDE** the new bag-on bag over the old bag-on bag stub to the inner ring as close as possible to the WCG.

[J] **ADHERE** vinyl tape to the new bag-on bag where the retaining band buckle is to be placed.

[K] **SECURE** the new bag-on bag with the retaining band.

[L] **REMOVE** the bag-out bag stub and drop the bag-out bag stub into the daughter drum/bagport bag/gloveport bag, as applicable.

[7] **ENSURE** that the WCG has been wiped down to reduce radiological contamination.

[8] **ENSURE** a portable HEPA-filter exhaust system (MAC-21) and elephant trunk are set up as close as possible to the filtered bagout bag in order to increase the local airflow at the site of the horsetail during the cutting operation.

[9] **SLIDE** the item to be bagged out to the end of the bag-out bag.

[10] **INSPECT** the bag-out bag for damage (e.g., tears).

9.1 WCG Item Bag-Out (continued)

[11] **IF** the bag-out bag is damaged (e.g., tears),
THEN:

[A] **REPAIR** the damage (e.g., tears) using vinyl tape.

[B] **REQUEST** an RCT survey for radiological contamination.

[C] **IF** radiological contamination is detected,
THEN FOLLOW the instructions of the RCT.

[12] **MIST** inside of the bag-out bag with spray cleaner and **RUB** the bag-out bag together to ensure the complete coverage of the spray cleaner in order to control contamination.

[13] **SQUEEZE** as much air as possible out of the bag-out bag.

[14] **GATHER** the bag-out bag.

[15] **ROTATE** the drum <u>or</u> **COMPRESS** the bag-out bag (as applicable) in order to create a horsetail approximately 8 to 10 in. long.

[16] **TIGHTLY SECURE** the horsetail using one layer of filament and two layers of vinyl tape.

[17] **ENSURE** that the horsetail is located far enough away from the filtered bagout bag to avoid creasing, folding, or otherwise challenging the integrity of the filter.

[18] **FIRMLY ATTACH** two binding ties near the center of the horsetail, approximately 6 in. apart.

[19] **IF** bagging out the last item for the work day,
THEN FIRMLY ATTACH a second binding tie approximately 2 in. from the center of the horsetail on the WCG side of the horsetail.

NOTE *The excess part of the binding tie protruding through the binding tie latch tie is <u>not</u> to be cut off.*

[20] **COVER** the attached binding ties with vinyl tape.

9.1 WCG Item Bag-Out (continued)

Waste Handling Technician Three

[21] **POSITION** the horsetail cutters between the binding ties of the horsetail.

Waste Handling Technician One

[22] **GRASP** top of horsetail.

Waste Handling Technician Two

[23] **GRASP** bottom of horsetail.

WARNING

Extremities SHALL <u>not</u> be placed inside the jaws of the cutting tool in order to prevent personnel injury due to pinching.

Waste Handling Technician Three

[24] **CUT** the horsetail between the binding ties.

Waste Handling Technician One and Two

[25] **SIMULTANEOUSLY COVER** the cut stubs of the bag-out bag with vinyl tape.

[26] **ENSURE** that the cut-stubs have been covered with a final layer of vinyl tape, as directed by an RCT.

NOTE 1 *Used cheesecloth are to be disposed of as compactable waste or in an empty daughter as waste added in process to be bagged on the WCG*

NOTE 2 *The following step may be performed out of sequence.*

Waste Handling Technician Three

[27] **WIPE** down the cutters used to cut the horsetail, and **PLACE** the cutters in a holder, and **PLACE** the cutters in the designated staging area.

Waste Handling Technician

[28] **IF** the bag-out bag has a filter that is covered with tape,
THEN:

[A] **REMOVE** the tape from bag filter.

9.1 WCG Item Bag-Out (continued)

[B] **REQUEST** an RCT survey for radiological contamination.

[C] **IF** radiological contamination is detected,
THEN FOLLOW the instructions of the RCT.

9.2 <u>WCG Introductory Port</u>

This sub-section is a stand-alone sub-section and may be performed independently of or in conjunction with other sub-sections.

NOTE *This sub-section provides instructions for introducing items into the WCG.*

WARNING

Items are <u>not</u> to be removed from the WCG using the airlock since items placed in the airlock from the interior of the WCG are possibly radiologically contaminated.

Waste Handling Technician

[1] **ENSURE** that the prerequisite actions have been completed.

[2] **PREPARE** the area in accordance with RCT instructions.

[3] **WEAR** respiratory protection as required by the applicable RWP.

RCT

[4] **PERFORM** radiological surveys as necessary during the waste container handling evolutions.

Waste Handling Technician

[5] **IF** radiological contamination is detected,
THEN FOLLOW the instructions of the RCT.

WARNING

Both WCG airlock doors are to remain closed until they must be opened to introduce an item into the WCG in order to prevent releasing radiological contamination out of the WCG.

[6] **ENSURE** that both WCG Introductory Port doors are securely closed.

9.2 WCG Introductory Port (continued)

[7] **OPEN** the outer WCG Introductory Port door.

WARNING

Items are to be placed inside of the WCG airlock in a manner that does <u>not</u> disturb the WCG airlock surfaces in order to mitigate the spread of radiological contamination.

[8] **GENTLY PLACE** the item to be introduced into the WCG airlock.

[9] **CLOSE** the outer WCG Introductory Port door.

[10] **OPEN** the inner WCG Introductory Port door.

[11] **REMOVE** the item from the WCG Introductory Port and **PLACE** the item in the WCG.

[12] **CLOSE** the inner WCG Introductory Port door.

[13] **VERIFY** that both WCG Introductory Port doors are securely closed.

10. PERFORMANCE—WCG WASTE PROCESSING

This section is a stand-alone section and may be performed independently of or in conjunction with other Performance sections.

NOTE 1 *Radiological surveys may be performed as determined necessary [e.g., by an RP representative (e.g., RCT)] anytime during the performance of this procedure.*

NOTE 2 *The WCATS desktop application WCRR-REMED is performed in conjunction with this section.*

NOTE 3 *All manual drum movement will be performed in accordance with Appendix 7, Manual Drum Movements Special Instructions and EP-DIV-Policy-20057, EWMO Health and Safety Policy-Manual Movement.*

10.1 WCG Waste Processing Preparation

Waste Handling Technician

[1] **ENSURE** that the prerequisite actions have been completed.

[2] **ENSURE** that the battery charger for the cordless drill in the WCG has been unplugged.

[3] **ENSURE** that the parent drum has been bagged onto the WCG in accordance with Section 7.1, Parent Drum Bag On.

NOTE *The following step may be performed out of sequence.*

[4] **ENSURE** that the daughter drums have been bagged onto the WCG in accordance with Section 8.1, Bag On Daughter Drum, Bagport, or Gloveport, and **RECORD** the following information on Attachment 1:

- Daughter Drum Number
- Daughter Drum Filter Number
- Daughter Drum Bag Filter Number
- Daughter Drum Purchase Order Number

[5] **IF** VE activities are to occur,
THEN ENSURE that CCP-TP-113, Standard Contact Handled Waste Visual Examination, is performed concurrently with this procedure.

10.1 WCG Waste Processing Preparation (continued)

NOTE *If the drum lid ringbolt was pre-cut, then the drum lid ringbolt may require the use of an impact wrench or other hand tools to remove the drum lid ringbolt.*

[6] **SLOWLY REMOVE** the parent drum lid, being prepared to close the lid if there are unexpected conditions.

[7] **EXAMINE** the contents of the parent drum, and **DETERMINE** whether the contents of the drum have any unexpected items.

[8] **IF** any unexpected items are present in the parent drum,
THEN:

[A] **CLOSE** the parent drum.

[B] **NOTIFY** supervision and the WCRRF Operations Center of the discrepancy, and **REQUEST** the applicable actions.

[C] **DOCUMENT** the discrepancy and applicable actions in the Comments section of Attachment 1.

NOTE *Placing the parent drum lid over the waste items being surveyed is a simulation of the waste items being inside of a drum and provides a representation of the expected dose rate outside of the drum in order to determine whether the dose rate may exceed 190 mrem/hr and is the desired survey method.*

[9] **ENSURE** that a drum lid is placed over the waste items to be surveyed, as necessary, and **REQUEST** an RCT perform radiological surveys of the items being removed from the parent drum.

NOTE 1 *Unvented, Sealed waste packages are those waste packages that have a positive locking mechanism, such as a gasket with drum closure ring or a screw top lid (with no other openings) to seal the lid to the waste package.*

[10] **IF** the parent drum contains an unvented, sealed waste package,
THEN:

[A] **RECORD** the parent drum identification number on Attachment 3, WCRRF WCG Breaching (Opening) Unvented, Sealed Waste Packages.

10.1 WCG Waste Processing Preparation (continued)

NOTE *Multiple copies of Attachment 3 may be required for parent drums containing more than four unvented, sealed waste packages that are 5- to 30 gal. Only a single copy of Attachment 3 is necessary for parent drums with multiple unvented, sealed waste packages that are less than 5 gal.*

[B] **CHECK** (√) the applicable box on Attachment 3 to indicate the type of unvented, sealed waste package (e.g., Metal 5- to 30-gal, Non-metallic 5- to 30-gal, or < 5-gal).

[C] **($) ENSURE** that non-sparking tools are available for use in the WCG, and **CHECK** (√) YES or NO on Attachment 3. (SAC 5.10.1.6.1).

NOTE *Administrative Control Lock Log Sheet form 10.4 of EP-DIV-AP-0117* ***SHALL*** *be completed anytime the lock is placed or removed for WCG receptacles lockout.*

[D] **($) ENSURE** that the WCG electrical receptacles have been de-energized and locked open/off with an administrative lock, and **CHECK (√)** SAT or UNSAT on Attachment 3, and **MAKE** an entry on the Administrative Control Log Sheet to document that the WCG electrical receptacles are locked open/off. (SAC 5.10.1.6.2)

NOTE 1 *A proper ground requires that all ends of the grounding strap be firmly attached to a clean-bare metal surface.*

NOTE 2 *Attachment 4, WCRRF WCG Breaching (Opening) Metal 5- to 30-gal Unvented-Sealed Waste Packages Surveillance, is completed to document the operator and independent verifier installing the grounding devices within TA-50-69.*

NOTE 3 *The following step is to be performed by an operator and then independently verified by a second operator.*

NOTE 4 *Separate copies of Attachment 4 are required for each waste package.*

Waste Handling Technician

[E] **IF** the waste package is a METAL 5- to 30-gal waste package,
THEN:

[a] **RECORD** the parent drum identification number on Attachment 4.

10.1 WCG Waste Processing Preparation (continued)

[b] **($) ENSURE** that the parent drum has been properly grounded to the WCG using a grounding strap in the WCG, and **CHECK** (√) SAT or UNSAT on Attachment 4 to document that the grounding strap was attached. (SR 4.6.1)

Independent Verifier

[c] **VERIFY** that the parent drum has been properly grounded to the WCG using a grounding strap in the WCG, and **CHECK** (√) SAT or UNSAT on Attachment 4.

Waste Handling Technician

[11] **IF** processing a parent drum containing an unvented, sealed 5- to 30-gal waste package, **THEN:**

WARNING

Unvented, sealed waste packages may contain a concentration of hydrogen gas and are to be handled or identified in this document using grounding devices and lid restraints in order to minimize any possible adverse effects from potentially releasing hydrogen.

NOTE *Drum lid restraints that are not in use are to be stored in such a matter that the drum lid restraints are protected from degradation (e.g., in a daughter drum).*

[A] **($) VISUALLY** inspect the waste package lid restraint for the following, and **DOCUMENT** the results of the inspection on Attachment 3:

- Degradation (e.g., no indication of cracked parts, missing fasteners, loose or frayed parts, excessive wear, or unusual deformation) (SAC 5.10.1.5.1)
- Missing or illegible identification
- Melting or charring
- Broken or worn stitching in load bearing splices
- Knots in any part of the drum lid restraint
- Discoloration and brittle or stiff areas

[B] **IF** the visual inspection of a drum lid restraint is unsatisfactory, **THEN:**

[a] **SEGREGATE** the unsatisfactory drum lid restraint from the other restraints, and **IDENTIFY** the restraint as unusable.

10.1 WCG Waste Processing Preparation (continued)

[c] **GO** to Step 10.1[11][A].

[C] **($) ATTACH** the waste package lid restraint to the waste package and verify proper installation, and **CHECK** SAT, UNSAT, or N/A that the lid restraint has been attached on Attachment 3. (SAC 5.10.1.5.1)

NOTE *A proper ground requires that all ends of the grounding strap be firmly attached to a clean-bare metal surface.*

[D] **($) IF** the waste package is a METAL 5- to 30-gal waste package,
THEN:

[a] **GROUND** the metal waste package using a grounding strap in the WCG, and **CHECK** (√) SAT or UNSAT on Attachment 4 to document that the grounding strap was attached. (LCO 3.6 and SR 4.6.1)

Independent Verifier

[b] **VERIFY** that the grounding strap is attached and **CHECK** (√) SAT or UNSAT on Attachment 4.

[c] **RECORD** the following information, Name, Signature, Z Number and Date on Attachment 4.

Waste Handling Technician

[d] **($) IF** the grounding strap was attached to the waste package or parent drum, **AND** the grounding strap becomes detached from either the waste package or the parent drum during the opening of the waste package,
THEN ENTER the Actions of LCO 3.6, and **NOTIFY** the WCRRF Operations Center. (LCO 3.6)

[E] **IF** the waste package lid **CANNOT** be removed and the waste package is to be vented by drilling a hole into the waste container,
THEN:

[a] **NOTIFY** supervision of need to vent container using a drill.

[b] **OBTAIN** a non-sparking (brushless) battery powered hand drill with an approximate 1/4 in. bit installed.

10.1 WCG Waste Processing Preparation (continued)

WARNING

Shavings from the drilling process may be hot and could potentially initiate a fire involving the items inside of the WCG.

[c] **ENSURE** the drill speed is set to slow speed and **DOCUMENT** on Attachment 4.

[d] **IF** sparking is observed during the drilling of the waste container, **THEN:**

1. **STOP** drilling operations.
2. **NOTIFY** the WCRRF Operations Center and SOS for guidance and direction.

[e] **DRILL** a hole through the container in a location provided by supervision.

WARNING

The WCG electrical receptacles are not to be re-energized until 30 min. has elapsed since the unvented waste package was opened in order to prevent the possibility of a flammable gas mixture deflagration.

NOTE *Glovebox operations may continue after opening a less than 5 gal-unvented sealed waste package while waiting the required 30 min. before re-energizing the WCG electrical receptacles.*

[f] **DOCUMENT** time when container was vented on Attachment 3.

[g] **ENSURE** that all WCG operations have been suspended.

[h] **($) WHEN** 30 min. has elapsed, **THEN DOCUMENT** the time and that greater than or equal to 30 min. has elapsed since the waste package was vented on Attachment 3. (SAC 5.10.1.5.2 and SAC 5.10.1.6.3)

10.1 WCG Waste Processing Preparation (continued)

[i] **CHECK** (√) SAT, UNSAT or N/A when the time is ≥ 30 min. on Attachment 3.

[j] **RESUME** operations as directed by supervision.

[k] **GO** to Step 10.1[14].

[F] **IF** the waste package lid **CANNOT** be removed and the waste package is to be vented using a non-sparking tools (e.g., punch and hammer),
THEN:

[a] **NOTIFY** supervision of need to vent the waste container.

[b] **VENT** container by piercing a hole in container using a non-sparking tools (e.g., punch and hammer).

[c] **DOCUMENT** time when waste container was vented on Attachment 3.

[d] **ENSURE** that all WCG operations have been suspended.

[e] **($) WHEN** 30 min. has elapsed,
THEN DOCUMENT the time and that greater than or equal to 30 min. has elapsed since the waste package was vented on Attachment 3. (SAC 5.10.1.5.2 and SAC 5.10.1.6.3)

[f] **CHECK** (√) SAT, UNSAT, or N/A when the time is ≥ 30 min. on Attachment 3.

[g] **RESUME** operations as directed by supervision.

[h] **GO** to Step 10.1[14].

10.1 WCG Waste Processing Preparation (continued)

[12] **IF** processing a parent drum containing an unvented, sealed waste packages of less than 5 gal,
THEN:

[A] **IF** the waste package lid **CANNOT** be removed and the waste package is to be vented by drilling a hole into the waste container,
THEN:

[a] **NOTIFY** supervision of sealed container needed to be drilled.

[b] **OBTAIN** a non-sparking (brushless) battery powered hand drill with an approximate 1/4 in. bit installed.

WARNING

Shavings from the drilling process may be hot and could potentially initiate a fire involving the items inside of the WCG.

[c] **ENSURE** the drill speed is set to slow speed and **DOCUMENT** on Attachment 4.

[d] **IF** sparking is observed at anytime during the drilling of the waste container,
THEN:

1. **STOP** drilling operations.

2. **NOTIFY** the WCRRF Operations Center and SOS for guidance and direction.

[e] **DRILL** a hole through the container in a location provided by supervision.

10.1 WCG Waste Processing Preparation (continued)

WARNING

The WCG electrical receptacles are not to be re-energized until 30 min. has elapsed since the unvented waste package was opened in order to prevent the possibility of a flammable gas mixture deflagration.

NOTE *Glovebox operations may continue after opening a less than 5 gal-unvented sealed waste package while waiting the required 30 min. before re-energizing the WCG electrical receptacles.*

[f] **DOCUMENT** time when waste container was vented on Attachment 3.

[g] **ENSURE** that all WCG operations have been suspended

[h] **($) WHEN** 30 min. has elapsed,
THEN DOCUMENT the time and that greater than or equal to 30 min. has elapsed since the waste package was vented on Attachment 3.
(SAC 5.10.1.5.2 and SAC 5.10.1.6.3)

[i] **CHECK** (√) SAT, UNSAT, or N/A when time is ≥ 30 min. on Attachment 3.

[j] **RESUME** operations as directed by supervision.

[k] **ENSURE** container possesses no free liquids.

[l] **GO** to Step 10.1[17].

[13] **OPEN** the waste package and **REMOVE** the waste package lid.

[14] **REMOVE** the lid restraint and **ENSURE** that the lid restraint and waste package lid, as applicable, are placed out of the way of the vented waste package.

[15] **($) RECORD** the time that the lid restraint and waste package lid were removed from the waste package on Attachment 3. (SAC 5.10.1.5.2 and SAC 5.10.1.6.3)

[16] **REMOVE** the grounding straps from the <u>metal</u> waste package, as applicable.

10.1 WCG Waste Processing Preparation (continued)

[17] **REMOVE** the grounding straps from the parent drum.

[18] **($) IF** directed by supervision,
THEN REMOVE the administrative lock from the WCG electrical receptacles, and **DOCUMENT** that 30 minutes has elapsed before re-energizing the WCG electrical receptacles. (SAC 5.10.1.6.3)

[19] **IF** sparking is observed at anytime during the processing of waste material,
THEN:

[A] **PLACE** a fire barrier (e.g., MET-L-X or fire blanket) over the suspect waste material.

[B] **STOP** waste processing.

[C] **ENSURE** that a Fire Watch has been stationed at the WCG to continuously monitor the waste in the WCG, and **CHECK** (√) YES or NO on Attachment 1.

NOTE *The following personnel are notified by the WCRRF Operations Center:*

- *OM or designee*
- *Solid Waste Regulatory Compliance Group*
- *Industrial Hygienist*
- *Cognizant System Engineer*
- *Radiation Protection*

[D] **NOTIFY** the WCRRF Operations Center/Shift Operations Manager of the discrepancy, and **DOCUMENT** the notification and discrepancy in the Comments section of Attachment 1:

[E] **IF** the suspect item is to be bagged out of the WCG,
THEN BAG OUT the suspect item in accordance with Section 9.1, WCG Item Bag-Out.

[F] **PLACE** the suspect item in an empty daughter drum.

[G] **IF** the daughter drum is attached to the WCG,
THEN BAG OFF the daughter drum in accordance with Section 8.2, Bag Off Daughter Drum.

[H] **CLOSE** the daughter drum in accordance with EP-WCRR-WO-DOP-0221.

10.1 WCG Waste Processing Preparation (continued)

[20] **IF** a shielded container (e.g., lead lined) is in the parent drum,
THEN:

WARNING

Personnel are to avoid the high radiation exposure area in front of a shielded container that has been accessed in order to prevent increased exposure to radiation due to radiation streaming from the open portion of the shielded container.

[A] **ENSURE** that personnel in Building TA-50-69 are notified that a shielded container is to be accessed and that they are positioned such that when the shielded container is accessed the radiation streaming from the shielded container is directed away from personnel.

[B] **ACCESS** the shielded container contents without removing the contents, and **REQUEST** an RCT to perform a radiological survey to determine the radiation levels.

[C] **IF** the radiation level exceeds an RWP limit,
THEN:

[a] **ENSURE** that the shielding has been replaced, and **CLOSE** the shielded container.

[b] **REQUEST** an RCT perform a radiological survey on the closed shielded container to determine the radiation levels.

[c] **IF** the closed, shielded container radiation level exceeds the RWP limits,
THEN:

1. **ENSURE** that all waste material is in a safe configuration.

2. **STOP** the work activity.

3. **COMPLY** with the RCT's instructions to minimize radiological exposure.

4. **NOTIFY** the WCRRF Operations Center of the condition, and **REQUEST** the applicable actions.

10.1 WCG Waste Processing Preparation (continued)

NOTE *Waste placed into daughter drums must be from a single parent drum except for the collection drum (pressurized container or aerosol can).*

[d] **IF** the waste material is **NOT** to be processed at this time as directed by supervision,
THEN:

1. **PLACE** the waste items from the parent drum into a daughter drum.

2. **BAG OFF** the parent and daughter drums in accordance with the applicable section of this procedure.

3. **IF** a Fire Watch was stationed,
THEN ENSURE that all INVENTORY is in a safe configuration, and **SECURE** the Fire Watch, and **CHECK** (√) YES or NO on Attachment 1.

4. **NOTIFY** the WCRRF Operations Center of the waste disposition.

NOTE 1 *Continued operation may require the work activity to be paused in order to allow operators and supervision to evaluate the condition to determine the necessary response to the situation (e.g., re-enter area under a different RWP or prepare a POC to accept the waste material).*

NOTE 2 ***($)*** *A STATIONARY FIRE WATCH is required in the OPERATION and WARM STANDBY MODE when the WCG INVENTORY is greater than 300 PE-Ci equivalent combustible waste. (AC 5.2.3)*

[D] **WHEN** the appropriate actions have been determined,
THEN GO to Step 10.1[15].

10.1 WCG Waste Processing Preparation (continued)

[22] **IF** any of the following items are identified during the processing of waste:

- Lead-elemental (e.g., circuit boards)
- Mercury-elemental (e.g., thermometers or switches)
- Batteries (e.g., lead/acid, nickel cadmium, or lithium)
- Light bulbs (i.e., incandescent or fluorescent)
- PCB items (e.g., ballasts, capacitors, or transformers)
- Liquids (any amount not remediated or absorbed)

THEN RECORD the item descriptive information (item type, size, trade name, if available) in the Comments section of Attachment 1.

NOTE 1 *The WMC can assist with assigning the appropriate RCRA Hazardous Waste Codes to the daughter drum.*

NOTE 2 *The following step may be performed when operationally convenient but must be completed the same day as the identification of the item.*

[C] **ENSURE** that the appropriate RCRA Hazardous Waste Codes is assigned to the drum that receives the item (e.g., daughter drum or collection drum) and **CONFIRM** with the WCRRF Inventory control person.

WARNING

Glass sample vials may contain residual granular plutonium hydride which can generate sparks when subjected to mechanical agitation. To reduce the possibility of breaking a glass sample vial and the generation of sparks glass sample vials SHALL be without excessive force. (EP-DIV-REPORT-09)

NOTE *Multiple sections may be performed and repeated in order to completely disposition all of the waste from a parent drum.*

[23] **PERFORM** the following applicable sub-section:

- Section 10.2, Waste Material Greater Than 190 mrem/hr
- Section 10.3, Prohibited Item Disposition
- Section 10.4, Waste Splitting Activities
- Section 10.5, Repackaging Activities
- Section 10.6, Processing Nitrate Salt Drums

10.2 Waste Material Greater Than 190 mrem/hr

The following sub-section provides instructions for the disposition of waste material with an expected radiation dose rate of greater than 190 mrem/hr on contact with the outside of a waste container. Simulating that the waste material is inside of a daughter waste container (e.g., measured through drum lid) is the desired method of determining the expected radiation dose rate of waste material outside of a waste container.

NOTE 1 *Appendix 5, Flowchart for Processing of High Dose Items of Mixed Material Types, illustrates the process for POC operations.*

NOTE 2 *Waste containers with Nitrate Salt and a radiation dose rate of greater than 190 mrem/hr are to be processed in accordance with Section 10.6, Processing Nitrate Salt Drums, before performing this section. An attempt to reduce the radiation dose rate to less than or equal to 190 mrem/hr by absorbing the Nitrate Salt with absorbent should be attempted first. Nitrate Salt absorption reduces the quantity of POCs required to process the waste material.*

Waste Handling Technician

[1] **ENSURE** that a POC assembly has been prepared and is available.

[2] **DETERMINE** whether the serial numbers on the pipe component lid and the pipe component are the same.

[3] **IF** the serial numbers do **NOT** match,
THEN:

[A] **IDENTIFY** (e.g., tag or mark) the POC indicating that the POC is defective.

[B] **SEGREGATE** the POC in order to prevent the item from being used.

NOTE *The NCR may be initiated at a time that is operationally convenient.*

[C] **ENSURE** that an NCR is initiated in accordance with P330-6, Nonconformance Reporting, as required.

[D] **NOTIFY** the WCRRF Operations Center of the discrepancy.

[E] **GO** to Step 10.2[1].

10.2 Waste Material Greater Than 190 mrem/hr (continued)

[4] **IF** the POC is to be bagged onto the WCG,
THEN RECORD the following POC bag-on bag information on Attachment 1:

- Manufacturer
- Model Number
- Serial Number
- Date of Manufacture

[5] **PLACE** the POC assembly and shielding near the vicinity of the WCG to provide shielding during bag-off operations or bag-on the POC to the WCG in accordance with Section 8.1, Bag On Daughter Drum, Bagport, or Gloveport; and **RECORD** the POC drum number and POC unique identification number on Attachment 1.

[6] **IDENTIFY** items to be placed into a POC assembly, and **ENSURE** that an item description is recorded on Attachment 1.

[7] **IF** the item is to be bagged off of the WCG and the item is from a waste container with a mixed material type,
THEN:

[A] **REMOVE** any lead shielding from outside of the item, and **PLACE** the lead in a daughter drum.

[B] **ENSURE** that a description of the item is recorded on Attachment 1.

[C] **BAG OFF** the item in accordance with Section 9.1, WCG Item Bag Out.

[D] **IF** there is no lead shielding inside of the item (container),
THEN PLACE the bagged out item inside a shielded (pewter) container or cover with a lead blanket.

[E] **GO** to Step 10.2[9].

NOTE *Shielded container is only used for the purpose of ALARA and not for final waste packaging.*

[8] **IF** an individual item is to be bagged out of the WCG,
THEN:

10.2 Waste Material Greater Than 190 mrem/hr (continued)

[A] **BAG OUT** individual items in accordance with Section 9.1, WCG Item Bag Out.

[B] **PLACE** the bagged out items in shielded (pewter) container or cover with a lead blanket, as required.

NOTE 1 *A POC assembly drum is full when it has reached its weight limit of 547 lb, or is physically full.*

NOTE 2 *Waste placed into daughter drums or Pipe Overpack Containers (POCs) must be from a single parent drum.*

[9] **WHEN** the item is to be placed into a POC,
THEN ENSURE that the item has been removed from the shielded (pewter) container or lead blanket, as necessary.

[10] **PLACE** the items into the POC.

[11] **IF** the POC assembly is **NOT** full,
AND the parent drum is still being processed,
AND the POC assembly is **NOT** bagged onto the WCG,
THEN:

[A] **ALIGN** the lid holes with the holes in the pipe component body.

[B] **HAND-THREAD** the lid bolts as far as possible.

[C] **REPLACE** the fiberboard packaging, being careful to match the pipe bolt heads, hoist ring, and filter with cutouts in fiberboard.

[D] **REPLACE** the spacers, liner lid, and drum lid.

[E] **IF** there are additional 190 mrem/hr items to be bagged out of the WCG,
THEN GO to Step 10.2[7].

[12] **IF** the POC is bagged onto the WCG,
THEN bag-off the POC in accordance with Section 8.2, Bag Off Daughter Drum

10.2 Waste Material Greater Than 190 mrem/hr (continued)

[13] **CLOSE** the POC assembly in accordance with the manufacturer's instructions and **DOCUMENT** (initials and Z number) that the POC assembly has been closed in accordance with the manufacturer's instructions on Attachment 1.

[14] **WEIGH** the POC assembly, and **RECORD** the POC Assembly Gross Weight on Attachment 1.

[15] **REQUEST** an RCT perform a radiation survey of the POC, and **RECORD** the POC radiation survey results on Attachment 1.

[16] **IF** the following requirements are **NOT** satisfied:

- External surface radiation dose rates less than 200 mrem/hr (DOE/WIPP-02-3122)
- Gross weight less than 547 lb for a 12 in. POC (CH-TRAMPAC)

THEN NOTIFY the WCRRF Operations Center of the discrepancy, and **REQUEST** the applicable actions.

[17] **LABEL** the POC assembly drum in accordance with EP-DIV-DOP-20043.

[18] **IF** all of the waste in the parent drum has **NOT** been dispositioned,
THEN GO to the appropriate sub-section to complete processing the remaining waste.

[19] **GO** to Section 11.1, Disposition.

10.3 Prohibited Item Disposition

The following sub-section provides instructions for the disposition of waste material that is considered to be prohibited items at WIPP.

NOTE 1 *The following activities associated with sorting parent drum waste such as the disposition of liquids, pressurized containers, and PCB-contaminated waste may be performed simultaneously or in any order.*

NOTE 2 *The Hold Tag for CCP NCRs is removed from the parent drum and returned to CCP personnel.*

NOTE 3 *A completed PID package includes the following documents:*

- *Attachment 1, WCRRF WCG Waste Processing Data Sheet*
- *Attachment 5, WCRRF Prohibited Item Collection Drum Data Sheet*
- *EP-WCRR-WO-DOP-0221 Attachment 1, Checklist for the Preparation of a New 55-Gallon Drum Assembly*
- *EP-WCRR-WO-DOP-0221 Attachment 2, Checklist for the Closing of a 55-Gallon Drum Assembly*
- *WDP Waste Remediation Safety Evaluation Data Sheet (EP-DIV-AP-20098 Attachment 1)*

Waste Handling Technician

[1] **LOCATE** any contained, uncontained, or free liquids.

NOTE 1 *Waste containers with liquids (any amount or configuration) that have <u>not</u> been solidified (absorbed) must be managed on secondary containment pallets and have a FREE LIQUID label affixed.*

NOTE 2 *By absorbing all liquids the resulting daughter drum is <u>not</u> required to be stored on a secondary containment pallet.*

[2] **IF** liquid is identified inside of transparent or opaque containers that is <u>less than or equal to</u> 60 ml in the containers,
AND the liquid is **NOT** to be absorbed,
THEN PLACE the containers with liquids into the daughter drum.

[3] **IF** liquid is identified inside of a transparent or opaque containers (e.g., contents adequately labeled),
THEN:

[A] **RECORD** the approximate liquid volume on Attachment 1.

10.3 Prohibited Item Disposition (continued)

[B] **OPEN** the containers.

[C] **PERFORM** a pH test of the liquid using Litmus Paper.
- Acid (less than 7)
- Caustic (base – greater than 7)

[E] **NEUTRALIZE** the liquid, as necessary.

[F] **OBTAIN** the appropriate absorbing agent, and **PLACE** the absorbent into a compatible container (e.g., bottle or bag) that has a volume of less than 4 Liters.

NOTE *Multiple containers of less than 4 liters may be required in order to absorb all of the free liquid.*

[G] **TRANSFER** the liquid into the compatible container (e.g., bottle or bag), and **PLACE** the container (e.g., bottle or bag) inside of the daughter drum.

NOTE *Waste containers with liquids (any amount or configuration) that have <u>not</u> been solidified (absorbed) must be managed on secondary containment pallets and have a FREE LIQUID label affixed.*

[4] **IF** liquid is identified in transparent containers or in opaque containers that **CANNOT** be safely opened (e.g., contents adequately labeled),
THEN:

[A] **PLACE** the containers into the daughter drum.

[B] **NOTIFY** the WCRRF Operations Center of the discrepancy, and **DOCUMENT** in the Comments section of Attachment 1.

NOTE *Liquids are <u>not</u> to be combined or bulked.*

[5] **IF** any free liquid is identified,
THEN:

[A] **DETERMINE** the approximate volume of liquid, and **DOCUMENT** the approximate amount of liquid on Attachment 1.

[B] **PERFORM** a pH test on the liquid using Litmus Paper.

10.3 Prohibited Item Disposition (continued)

[C] **NEUTRALIZE** the liquid, as necessary.

[D] **OBTAIN** the appropriate absorbing agent, and **PLACE** the absorbent in a compatible container (e.g., bottle or bag) that has a volume of less than 4 Liters.

[E] **ADD** a small amount of the free liquid to the container (e.g., bottle or bag).

[F] **IF** any reaction occurs between the absorbent and the free liquid,
THEN:

[a] **STOP** the addition work activities.

[b] **NOTIFY** the WCRRF Operations Center of the condition, and **REQUEST** the applicable actions.

[c] **DOCUMENT** the notifications and actions in the Comments section of Attachment 1.

NOTE *Multiple containers (e.g., bottle or bag) of less than 4 liters may be required in order to absorb all of the free liquid.*

[G] **IF** processing Nitrate Salts with free liquids,
THEN GO to Sub-section 10.6, Processing Nitrate Salt Drums.

[H] **MIX** the absorbent with the waste.

[I] **ENSURE** absorbent is thoroughly mixed with the liquid.

NOTE *Absorbing waste containers that are categorized as Nitrate Salts will generate additional daughter drums due to the amount of absorbent required to solidify the waste.*

[J] **PLACE** the containers (e.g., bottle or bag) inside of the daughter drum.

[K] **REPEAT** Step 10.3[5] until all liquids have been absorbed.

10.3 Prohibited Item Disposition (continued)

NOTE *Appendix3, Volumes of Cylindrical Inner Containers Near 4 Liters, can be used to help determine whether a container is greater than 4 liters.*

[6] **LOCATE** sealed, unpressurized containers greater than 4 liters (that do not contain any liquid), and **DISPOSITION** the container as follows:

[A] **REMOVE** the tape, lid, cap, stopper, or other appropriate method.

[B] **PLACE** the dispositioned items into the daughter drum.

[7] **LOCATE** opaque or non-penetrable item (that do not contain any liquid), and **DISPOSITION** the container as follows:

[A] **DESCRIBE** in detail (e.g., size, shape, labeling, weight, material) the opaque or non-penetrable items on Attachment 1.

[B] **PLACE** the dispositioned items into the daughter drum.

[8] **LOCATE** potentially pressurized containers, and **DISPOSITION** the container as follows:

[A] **IF** there is evidence that a potentially pressurized container has been previously punctured and is empty,
THEN:

[a] **PLACE** a metal rod or equivalent (item found in the waste) inside the container and **SECURE** with tape, or **ENLARGE** the hole to be visible by Radiography.

[b] **PLACE** the container inside the daughter drum.

[B] **IF** a potentially pressurized container is **NOT** punctured, and does **NOT** possess a mechanical means to depressurize the container,
OR the pressurized container is greater than or equal to 5 gal,
THEN:

[a] **DECONTAMINATE** (wipe down) the potentially pressurized container.

[b] **BAG OUT** the potentially pressurized container in accordance with Section 9.1, WCG Item Bag Out.

IPC-1

10.3 Prohibited Item Disposition (continued)

NOTE *Item Identification labels are generated as part of performing the WCATS desktop remediation application.*

[c] **PLACE** an Item Identification (ID) label on the potentially pressurized container or bagout bag.

NOTE 1 *A collection drum for pressurized containers and aerosol cans will be established and placed inside one of the WCRRF Transportainers (TSDF).*

NOTE 2 *Pressurized cylinders and aerosol cans must be collected in separate drums (e.g., on collection drum for pressurized cylinders and one collection drum for aerosol cans. All other prohibited items that cannot be remediated must be collected in a separate (third) collection drum.*

[d] **PLACE** the potential pressurized container in a designated collection drum.

[e] **ENSURE** that the following information is recorded on Attachment 5 for each item:

- Collection drum number
- Collection drum type (pressurized container, aerosol, or other)
- Date collection drum waste created
- Date item is added to the collection drum
- Item Identification Label Number
- Parent Container Number
- Parent Accumulation Start Date
- Parent EPA Codes
- Item Description
- Item Shape
- Item Size
- Item Labeling
- Item Weight (lb)
- Initials and Z number

NOTE *The hazardous waste label may need to be replaced in order to ensure that all information is added and legible.*

[f] **ENSURE** that the accumulation start date on the collection drum reflects the earliest parent drum accumulation start date recorded on Attachment 5.

10.3 Prohibited Item Disposition (continued)

[g] **ENSURE** that all EPA Codes from the associated parent drums are documented on the collection drum hazardous waste label.

ICP-1

[C[**IF** a potential pressurized container is **NOT** punctured, and possesses a mechanical means to depressurize the container,
AND the pressurized container has a volume of less than 5 gal,
THEN NOTIFY the WCRRF Operations Center and the SOM for guidance and direction for dispositioning the container.

[9] **IF** any polychlorinated biphenyls (PCB)-contaminated waste is identified,
THEN:

[A] **DESCRIBE** in detail (e.g., size, shape, labeling, weight, material) the PCB-contaminated waste on Attachment 1.

NOTE *The following step may be performed when operationally convenient.*

[B] **ATTACH** a PCB Item ID Number to the drum receiving the PCB waste (above the top rolling hoop and cover with clear tape), and **RECORD** the PCB Item ID Number on Attachment 1.

[C] **PLACE** the PCB-contaminated waste into a daughter drum.

[10] **DOCUMENT** a description of the type of remaining waste added to each daughter drum during the processing of waste from a parent drum on Attachment 1.

[11] **REPEAT** Steps 10.3[2] though 10.3[10] as necessary to completely resolve any PIDs within the parent drum.

[12] **IF** all of the waste in the parent drum has **NOT** been dispositioned,
THEN GO to the appropriate sub-section to complete processing the remaining waste.

NOTE *The following step may be performed out of sequence.*

[13] **DETERMINE** the level of waste placed into the daughter drum, and **RECORD** the Daughter Drum % Full value (%) on Attachment 1.

[14] **BAG OFF** waste containers in accordance with Section 7.2, Parent Drum Bag Off; and Section 8.2, Bag Off Daughter Drum.

[15] **GO** to Section 11.1, Disposition.

10.4 Waste Splitting Activities

The following steps provide instructions for the disposition of waste material with a PE-Ci value that requires the waste material to be divided into multiple daughter drums.

This sub-section is performed following the assaying of the parent drum and the determination of the number of daughter drums to be generated from the parent drum.

Waste Handling Technician

[1] **CAREFULLY REMOVE** a portion of the parent drum's contents (waste items).

[2] **NOTIFY** the Assay Personnel of the estimated weight of the items, as requested.

[3] **PLACE** the waste items into the WCG metal bucket.

[4] **LOWER** the metal bucket into the applicable daughter drum.

NOTE *Radiological assay data may be provided at the time of segregation or from waste container documentation provided with the container.*

[5] **ENSURE** a radiological assay of the material in the applicable daughter drum is performed as necessary.

Waste Handling Technician

[6] **IF** the assay is higher than desired,
THEN:

[A] **LIFT** the metal bucket out of the applicable daughter drum.

[B] **REMOVE** some of the metal bucket contents.

[C] **GO** to Step 10.4[4].

[7] **LIFT** the metal bucket out of the applicable daughter drum and segregate the waste in the WCG per radiological assay data.

NOTE *Waste placed into daughter drums or Pipe Overpack Containers (POCs) must be from a single parent drum.*

[8] **PLACE** the segregated waste from the WCG into the applicable daughter drum.

10.4 Waste Splitting Activities (continued)

[9] **REPEAT** Steps 10.4[1] through 10.4[8] until the desired radiological assay value is reached in the applicable daughter drum (farthest from airlock).

NOTE *The following step may be performed out of sequence.*

[10] **DETERMINE** the level of waste placed into the daughter drums, and **RECORD** the Daughter Drum % Full value (%) on Attachment 1.

[11] **BAG OFF** the applicable daughter drum in accordance with Section 8.2, Bag Off Daughter Drum.

NOTE *Steps 10.4[12] and 10.4[13] may be performed in any order or concurrently.*

[12] **BAG ON** a new daughter drum replacement in accordance with Section 8.1, Bag On Daughter Drum, Bagport, or Gloveport.

[13] **REPEAT** Steps 10.4[1] through 10.4[12] until all material within the parent drum has been processed.

[14] **WHEN** assaying of waste at the WCG is complete,
THEN ENSURE that the assaying equipment is removed from the WCG Exclusion Zone.

[15] **IF** all of the waste in the parent drum has **NOT** been dispositioned,
THEN GO to the appropriate sub-section to complete processing the remaining waste.

[16] **GO** to Section 11.1, Disposition.

10.5 Repackaging Activities

Waste Operator

[1] **REMOVE** waste items from the parent drum.

NOTE *Waste placed into daughter drums or Pipe Overpack Containers (POCs) must be from a single parent drum.*

[2] **PLACE** the waste items into a daughter drum.

[3] **DOCUMENT** any waste added during the processing of waste from a parent drum on Attachment 1.

NOTE *The following step may be performed out of sequence.*

[4] **DETERMINE** the level of waste placed into the daughter drums, and **RECORD** the Daughter Drum % Full value (%) on Attachment 1.

[5] **BAG OFF** the parent and daughter drums from the WCG in accordance with Section 7.2, Parent Drum Bag Off; and Section 8.2, Bag Off Daughter Drum.

[6] **IF** all the waste in the parent drum has **NOT** been dispositioned,
THEN GO to the appropriate sub-section in this procedure to complete processing of the remaining waste.

[7] **GO** to Section 11.1, Disposition.

10.6 Processing Nitrate Salt Drums

The following sub-section provides instructions for the disposition of Nitrate Salt drums that require the waste material to be mixed with absorbent material. Unless otherwise directed by supervision the minimum ratio of absorbent to Nitrate Salt is 3-parts absorbent to 1-part Nitrate Salt.

[1] **REMOVE** the waste items from the parent drum.

[2] **DOCUMENT** any waste items from the parent drum added to the daughter drum during the waste processing on Attachment 1.

[3] **ENSURE** that an organic absorbent (Kitty Litter/Zeolite® absorbent) is added to the waste material at a minimum ratio of 3-parts absorbent to 1-part waste or at a ratio as directed by supervision.

[4] **ENSURE** absorbent (Kitty Litter/Zeolite® absorbent) is thoroughly mixed with the Nitrate Salt material.

[5] **IF** the measured radiation level of the absorbent/Nitrate Salt mixture is greater than 190 mrem/hr,
AND multiple attempts to reduce the radiation level by splitting the absorbent/Nitrate Salt mixture have been attempted or directed by supervision,
THEN GO to Section 10.2, Waste Material Greater Than 190 mrem/hr.

[6] **IF** the measured radiation level of the absorbent/Nitrate Salt mixture is greater than 190 mrem/hr,
THEN:

[A] **SPLIT** the absorbent/Nitrate Salt mixture.

[B] **REPEAT** Steps 10.6[3] through 10.6[5] for each portion of the absorbent/Nitrate Salt mixture.

[7] **PLACE** process waste into daughter drum.

[8] **REPEAT** Steps 10.6[1] through 10.6[7] for all Nitrate Salt processing.

[9] **REMEDIATE** the contents of the parent drum for other items as applicable.

10.6 Processing Nitrate Salt Drums (continued)

NOTE *Absorbent waste containers that are categorized, as Nitrate Salts will generate additional daughter drums due to the amount of absorbent required to solidify the waste.*

[10] **DETERMINE** the level of waste placed into the daughter drums, and **RECORD** the Daughter Drum % Full value (%) on Attachment 1.

[11] **BAG OFF** the parent and daughter drums from the WCG in accordance with Section 7.2, Parent Drum Bag Off; and Section 8.2, Bag Off Daughter Drum.

[12] **CLOSE** the daughter drum in accordance with EP-WCRR-WO-DOP-0221, Preparing and Closing 55-Gallon Daughter Drum Assemblies.

11. POST-PERFORMANCE ACTIVITY

11.1 Disposition

Waste Handling Technician

[1] **SIGN** and **DATE** the applicable attachments.

Cognizant System Engineer

[2] **IF** UNSAT was checked on Attachment 4,
THEN:

[A] **PERFORM** an Immediate Operability Determination (IOD) in conjunction with the SOM in accordance with AP-341-516, Operability Determination and Functionality Assessment.

[B] **IF** the IOD is that the Structure, System, and Component (SSC) is operable, **AND** information is available that could change the outcome of the IOD, **THEN PERFORM** an Prompt Operability Determination for the deficiency in accordance with AP-341-516.

[C] **NOTIFY** the applicable Operations Center and SOM of the operability determination, as applicable.

[D] **PRINT, SIGN, Z number** and **DATE** Attachment 4.

SOS or designee

[3] **IF** a Fire Watch was stationed,
THEN ENSURE all INVENTORY is in a safe configuration, and **SECURE** the Fire Watch, and **CHECK** (√) YES or NO on Attachment 1.

[4] **IF** Section 10 was performed,
THEN ENSURE that the WCATS desktop application WCRR-REMED has been completed and the all-in-one labels generated and applied in accordance with EP-DIV-DOP-20043.

[5] **REVIEW** the applicable attachments for accuracy and completeness.

[6] **IF** any discrepancies are identified,
THEN RESOLVE the discrepancies with the original surveillant to correct the documentation.

11.1 Disposition (continued)

[7] **IF** Attachment 4 was completed,
THEN:

[A] **CHECK** (√) YES or NO to indicate whether the applicable acceptance criteria is satisfied on Attachment 4.

[B] **IF** the applicable acceptance criteria is **NOT** satisfied,
THEN:

[a] **ENSURE** that the applicable TSR actions have been implemented.

[b] **ENSURE** that the actions of EP-DIV-AP-13, EWMO TSR-Related Operational Limits Actions Compliance Tracking, have been implemented.

[c] **ENSURE** that the WCRRF Operations Center, SOM and EWMO Facility Operations Director (FOD) have been notified of the discrepancy.

[8] **PRINT, SIGN,** and **RECORD** Z#, Date/Time on the applicable attachments.

[9] **FORWARD** the applicable attachments to the WCRRF Operations Center.

[10] **ENSURE** that the Administrative Control Lock Log Sheet form, lock and key are returned to WCRRF Operation Center.

[11] **IF** a prohibited item collection drum was brought into TA-50-69,
AND waste processing is complete,
THEN ENSURE that the prohibited item collection drum is moved out of TA-50-69.

NOTE *Completing a Post-Job Review may be accomplished using the applicable P300 form or online (the preferred method since the institution has access to feedback and lessons learned http://int.lanl.gov/safety/iwmc/ [Click on the Submit IWD Part 4, Post-Job Review]).*

[12] **IF** any of the following occur:
- A new activity was completed for the first time
- A request was made by anyone involved with the performance of this procedure to perform a post-job review
- An abnormal event occurred
- A revision to an existing procedure was issued and it has been determined by the procedure owner or designee that a Post-Job Review is required

THEN PERFORM a Post-Job Review in accordance with P300.

11.1 Disposition (continued)

[13] **IF** the Post-Job Review identified any necessary changes to this procedure, **THEN INITIATE** a revision to this procedure.

11.2 Records Processing

Waste Handling Technician or Supervision

[1] Disposition records in accordance with the following:

Record Identification	Record Type Determination	Protection/Storage Method	Processing Instructions
Appendix 1. WCRRF P101-25, Attachment B Drum Lift Pre-Engineered Critical Lift Plan, Attachment 1, WCRRF WCG Waste Processing Data Sheet Attachment 2, WCRRF WCG Drum Lift Inspection Data Sheet Attachment 3, WCRRF WCG Breaching (Opening) Unvented, Sealed Waste Packages Checklist Attachment 4, WCRRF WCG Breaching (Opening) Metal 5- to 30 gal Unvented, Sealed Waste Package Surveillance Attachment 5, WCRRF Prohibited Item Collection Drum Data Sheet	Quality Assurance (QA) Record	Supervision **SHALL** implement a reasonable level of protection to prevent loss and degradation. Records should be maintained in a one-hour fire rated metal file cabinet when not in use. The instructions in this section may vary depending on the record such as some records may be retained in an Operations Center for a period of time (e.g., 1 year) in order to provide trending data or evidence of compliance.	When the records are ready for final disposition, the record is transferred to Records Management in accordance with EP-DIR-AP-10003, Records Management Procedure For ADEP Employees.

12. REFERENCES

ABD-WFM-006, Technical Safety Requirements (TSRs) for Waste Characterization, Reduction, and Repackaging Facility (WCRRF)

AP-341-516, Operability Determination and Functionality Assessment

CCP-TP-113, CCP Standard Waste Visual Examination

CH-TRAMPAC, Contact Handled – Transuranic Waste Authorized Methods for Payload Control

DOE/WIPP-02-3122, Transuranic Waste Acceptance Criteria For Waste Isolation Pilot Plant

EP-DIV-AP-0112, EWMO Pre-Job Briefings

EP-DIV-AP-13, EWMO TSR-Related Operational Limits Actions Compliance Tracking

EP-DIV-AP-20047, LTP Glovebox/Glovebag and Glove Safety Program

EP-DIV-AP-20098, LTP TRU Waste Remediation Safety Evaluation

EP-DIV-AP-0117, WDP Division Forms

EP-DIV-AP-0120, EWMO Watchbill Administration

EP-DIV-DOP-20043, LTP TRU Waste Container Labeling

EP-DIV-POLICY-20057, EWMO Health and Safety Policy-Manual Movement

EP-DIV-REPORT-09, Engineering Path Forward Report for CMR Wing 2 Containers

EP-DIR-AP-10003, Records Management Procedure For ADEP Employees

EP-WCRR-FO-DOP-0201, WCRRF and Building TA-50-69 TSR Mode Change

EP-WCRR-RM-AOP-0208, Special Shapes

12. REFERENCES (continued)

EP-WCRR-WO-DOP-0221, Preparing and Closing 55-gal Daughter Drum Assemblies

EP-WCRR-WO-DOP-0236, WCRRF Loading/Unloading SWB or 85-gal Drum

EP-WCRR-WO-DOP-0239, Verifying WCRRF Scales

EWMO-DO-07-042, Memo. Dtd. Jul 6 ,2007, WCRRF Pu-238 Glovebag Issue

Form 1489, Pre-Operational Inspection Record for Overhead Cranes and Hoists

P101-18, Procedure for Pause/Stop Work

P101-25, Cranes, Hoists, Lifting Devices, and Rigging Equipment

P330-6, Nonconformance Reporting

APPENDIX 1
Page 1 of 10

WCRRF DRUM LIFT CRITICAL LIFT PLAN (P101-25 Attachment B)

Table B-1. LANL Critical Lift Plan for Pre-Engineering Production Lift	
Name and company of person preparing this plan: LANS	
Date prepared: 1-31-2014	**Date of lift:**
Critical lift plan expiration date: N/A	**PIC:**
Client/customer: DOE/WIPP	Job #: N/A Project #: N/A
Lift location (building #, address, etc.): WCRRF, TA-50-69	This critical lift plan must be available when and where the lift is performed. How will this requirement be met? Kept on file in the WCRRF Operations Center.

A. Critical Lift Determination	
A lift will be determined critical if any of the following conditions are met. Check each answer with either a Yes or a No.	
1. If the load item were damaged or upset would it result in a release into the environment of radioactive or hazardous material exceeding the established permissible environmental limits?	Yes ____ No √
2. Is the load item unique and, if damaged, would it be irreplaceable or not repairable and is it vital to a system, facility or project operation?	Yes ____ No √
3. If the load item was damaged, would the cost to replace or repair the load item, or the delay in operations of having the load item damaged have a negative impact on facility, organizational, or DOE budgets to the extent that it would affect program commitments?	Yes ____ No √
4. If the load were mishandled or dropped, would the event cause any of the above noted consequences to nearby installations or facilities?	Yes ____ No √
5. Does the lift exceed 75% of the manufacturer's rated capacity for the crane, hoist, or mechanized equipment to be used in the lift?	Yes √ No ____
6. Does the load item require special care in handling because of weight, size, asymmetrical shape, undetermined center of gravity, installation tolerances, or other unusual factors?	Yes ____ No √
7. Is the lift an otherwise non-critical lift that must be made in close proximity to critical or expensive items that could be damaged as a result of contact with a hoisted load?	Yes ____ No √
8. Does the lift use two or more cranes, hoists, pieces of mechanized equipment, or a combination of such equipment?	Yes ____ No √
9. Is the lift such that the crane, hoist, or mechanized equipment could at any time come in contact with an energized high voltage power line?	Yes ____ No √
10. Could failure of this lift significantly impact the confidence of LANL customers or sponsors in the ability of LANL to safely execute current or future missions?	Yes ____ No √

APPENDIX 1
Page 2 of 10

Table B-1. LANL Critical Lift Plan (Cont.)

B. Pre-lift Checklist (Completed prior to each lift)

__ Crane's monthly and annual inspections current
__ Periodic maintenance complete
__ Crane inspected __ Site-control in-place
__ Load test verified __ Spotters in-place
__ Operator is qualified __ Signal person identified
__ Riggers are qualified __ Head-height checked
__ Rigging proof tested __ Hoist-height checked
__ Proof tests verified __ Signatures procured
__ Rigging inspected __ Tailing info provided
__ Annual rig. Insp. current __ Job briefing held
__ Work zones identified __ Team is ready for lift

C. Personnel & Environmental Exposure

1. Any radiation exposure hazards? __Yes_____
2. Any chemical exposure hazards? __Yes____
3. Any explosive hazards? ___No_____
4. Any exposure hazards to the public? ___No__

If YES to any of the above, what precautions are needed?
1. RWP
2. IWD No

5. Is EM&R notification required? No
When? N/A
Where? N/A
Who? N/A

D. Load Identification and Information

1. Load condition: ____ New ___ Used __√ N/A
2. Wt. empty: ___N/A_____
3. Wt. of contents: ___N/A_____
4. Wt. of lifting beam: ___N/A_____
5. Wt. of rigging: __N/A_____
6. Wt. of excess load material: _N/A_____
7. Wt. of temporary lift frames: __N/A_____
8. Total weight: __> 468 lb ≤ 624 lb_____
9. Source of load weight information: _____
WCRRF drum scale _____
(drawings, calculations, dynamometers, etc.)
10. Page on drawing: __N/A_____
11. Revision #: __N/A__ Revision date: __N/A__
12. Center of gravity has been identified: __N/A__
13. Dimensions: __Standard 55-gal drum_____
14. Location and type of lift points are shown:
___See attached figure._____

E. Operating Equipment to be Used

1. Crane mfg. and model: __Drum Lift: LANL___
___Designed and Built_____
2. Crane S/N: _N/A_ ID-No: Drum -01 _____
3. Crane capacity: ___624 lb_____
4. Trolley/travel restrictions: __N/A_____
5. Load is what percent of crane capacity? __75 – 100 %
6. Are any crane, hoist, and equipment load charts required for this lift? Y _____ N __√__
Are they available to the operator?
Y _____ N _____ N/A __√____

APPENDIX 1
Page 3 of 10

Table B-1. LANL Critical Lift Plan (Cont.)	
F. Rigging	**I. Sketches & Drawings**
1.Hitch type(s): N/A	In accordance with DOE-STD-1090-2007, *Hoisting and Rigging Standard,* rigging sketches must include--as applicable:
2. Sling type: WR ___ FW ___ RS __ Chain ___ (If more than one, write the number of each type on the appropriate line) N/A	1. Identification and rated capacity of slings, lifting bars, rigging accessories, and below-the-hook lifting devices. N/A
3. Number of slings: N/A	2. Load-indicating devices. N/A
4. Size: N/A	3. Load vectors (Sling Tension). N/A
5. Shackle sizes: N/A	4. Lifting points. N/A
6. Shackle rated capacity: N/A tons	5. Sling angles N/A
7. Sling assembly rated capacity: N/A lbs.	6. Boom and swing angles N/A
8. Shackle secured to load by: N/A	7. Methods of attachment. N/A
9. Shackle & lifting lug mating are OK? N/A	8. Crane orientations. N/A
10. Temporary lift frames & weights: N/A	9. Other factors affecting equipment capacity, such as load path sketch, key point heights, floor or soil bearing capacity, etc. Yes
11. Supports & load grillages shown? N/A	10. Calculate and provide the rated capacity of equipment in the configuration in which it will be used. Yes Make sure that these items are included at a minimum.
G. Operating Area	**J. Notes/Things To Do**
1. Are obstructions present? No	N/A
2. Are clearance issues present? No	
3. Is the lift area populated? No	
4. Action items for 1, 2, & 3: Drawing provided	
H. Practice Lift Required?	
1. Describe the lift No	
2. Team members involved in the practice lift must be those who will be involved in the actual lift. Are all of those members present? N/A	

APPENDIX 1
Page 4 of 10

Table B-1. LANL Critical Lift Plan (Cont.)

K. Personnel Assignments
List names of all persons involved in the lift and identify their roles (Operator, Signaler, Person In Charge [PIC], etc.). All must be qualified.

Name	Z Number	Role	Training Verified		Comments/Notes
			Y	N	
			Y	N	
			Y	N	
			Y	N	
			Y	N	
			Y	N	
			Y	N	

L. Review and Approval. List all that apply. (Must include the PIC and one other qualified person at a minimum and may include the health and safety rep., Responsible Line Manager [RLM], First Line Manager [FLM], responsible oversight org. rep., quality assurance rep., or others as required)

	Z Number	Organization	Concurrence / Approver's Signature
Responsible Line Manager		LTP-DDP	/s/John Guadagnoli /Randy Axtell
Crane Program SME	219935	OSH-ISH	/s/Clay Davis
IHS SME	120199	DSESH-EWMO	/s/Robert Gardner Winkle
CSE	233208	ES-EWMO	/s/Shawn West
PIC 1	240092	WCRRF LTP-DDP	/s/Clayton Mullins
Operator	240092	WCRRF LTP-DDP	/s/Joe Quintana
WCRRF SOS	240092	WCRRF LTP-DDP	/s/Clayton Mullins

APPENDIX 1
Page 5 of 10

M. Pre-lift Meeting					
Name	Z Number	Signature	Name	Z Number	Signature

APPENDIX 1
Page 6 of 10

Load Schematic & Rigging Method

Load Schematic & Rigging Method

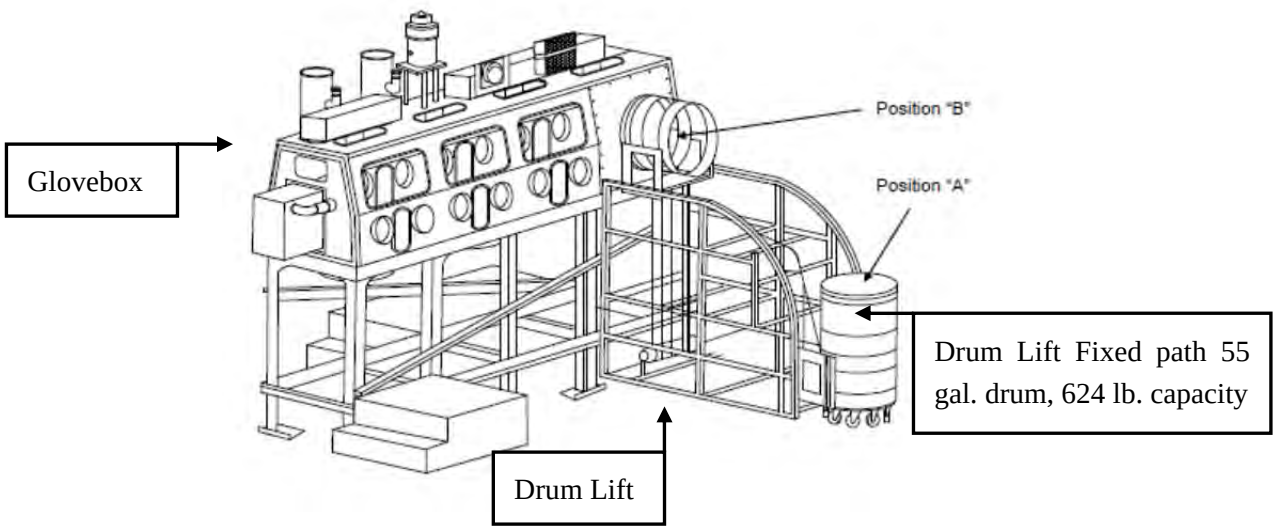

APPENDIX 1
Page 7 of 10

Load Travel Path/Personnel Placement

See Load Handling Sequence and Procedures

APPENDIX 1
Page 8 of 10

Load Handling Sequence & Procedures

Purpose

This critical lift plan is used for loading degraded or loss of integrity drums or drums that satisfy the critical lift requirements of P101-25 with the WCG Drum Lift as required by ABD-WFM-006, Technical Safety Requirements (TSRs) for Waste Characterization, Reduction, and Repackaging Facility (WCRRF). This critical lift plan must be used to lift and lower degraded drums with waste material using the WCG Drum Lift. This plan will be used to handle and prepare waste drums at Area-G and at WCRRF for a critical lift.

General Guidelines/Notes

This critical lift plan has been prepared in accordance with P101-25, Cranes, Hoists, Lifting Devices, and Rigging Equipment.
Drum handling operations involving degraded/loss of integrity drums or drums that satisfy the requirements for a critical lift in accordance with P101-25 (e.g., drums weighing greater than 468 lb) at WCRRF are performed using approved procedures and lifting equipment specifically designed for this operation.
The following information **SHALL** be reviewed during the critical lift pre-job brief:

1. All lifting and signaling **SHALL** be performed by a qualified operator. Supervision will be by a designated Qualified Crane Operator and Rigger Person-In-Charge (PIC) and documented on the WCRRF WCG Critical Lift Plan Concurrence Sheet.
2. The WCG Drum Lift and drums **SHALL** be visually inspected by the operator and/or qualified PIC. Any noted substandard item **SHALL** be cause for suspending operations until an acceptable replacement is acquired.
3. The rigging procedure **SHALL** be followed. Where changes are required due to site conditions, the changes **SHALL** be reviewed and approved by the Qualified Crane Operator and Rigger PIC.
4. The weight of the load **SHALL** include the 55 gal drum and lead blankets (if used for shielding purposes). In no case should the lift exceed 624 lb.
5. Communications between the WCG pendant operator and PIC **SHALL** be clear and unobstructed. The primary system **SHALL** be voice communications. Only designated, qualified signalers **SHALL** give signals to the operator. However, the operator **SHALL** obey a stop signal at all times, no matter who gives the signal.
6. A pre-lift meeting with all responsible persons **SHALL** be held before the lifts and each person **SHALL** be assigned specific duties and sign the pre-job sheet.
7. The equipment to be used for this lift will be as applicable: WCG Drum Lift.

APPENDIX 1
Page 9 of 10

Project Notes and Specifications

1. The primary goal is to perform a safe lift in a timely manner.
2. This lift has been frequently performed with equipment stated in this plan. A preliminary lift is not required but if any discrepancies are noted during the lift, the project **SHALL** be stopped and re-evaluated by the Qualified Operator, and Qualified Crane Operator and Rigger PIC.
3. The drum **SHALL** be positioned secured in the WCG Drum Lift to facilitate SAFE and efficient operation. The drum lift pendant operator **SHALL** announce operation of the lift before commencing raising/lowering of the drum and all personnel **SHALL** stand clear and to the side of drum movement. The work area for assembling the payload **SHALL** be limited to personnel necessary for the operation. (Example: Operator, signal personnel, PIC, and RCTs.)
4. The lift requires understanding by the entire crew. This lift plan **SHALL** be thoroughly reviewed by the personnel performing the lift and the Critical Lift / Pre-Lift Meeting **SHALL** be conducted before the lift to ensure that all personnel are aware of their assigned duties. Each person involved in the lift must attend the meeting and sign the attendance sheet.

Competent Person / Lift Supervisor

The responsible person for this lift is the designated Qualified Crane Operator and Rigger PIC.

Emergency Action Plan

1. In the event that an emergency occurs, all operations **SHALL** be discontinued and any raised load **SHALL** be lowered/secured, if possible. For specific casualties, operators will also perform required actions of applicable procedures in the WCRRF Response Manual.
2. Each portion of the lift presents a slightly different set of variables as related to a direction and area where the components may be set down temporarily during an emergency.
3. During the pre-lift meeting the operators, riggers, and spotter are to specifically discuss emergency actions at various points during the lift. If the raised load has to be secured the operator will do so and contact the RCT and Qualified Crane Operator and Rigger PIC. All non-essential personnel are to be kept clear of the lift area.
4. The operator and rigging personnel will not resume the lift operations without approval from the RCT and the Qualified Crane Operator and Rigger PIC.
5. In the event of an equipment malfunction and the drum cannot be lowered/secured:
    - The operation will be placed in a safe configuration.
    - The waste will be unloaded from the drum and the drum will be manually removed from the drum lift, if possible, or the CSE will be notified for the applicable actions.

APPENDIX 1
Page 10 of 10

Hazard Assessment
This lift has been reviewed in great detail to ensure a safe lift and minimize hazards. The following items have been identified as unique for this lift.

In no case **SHALL** material being lifted weigh more than 624 lb. (drum + lead shielding).

Test Lift—A test lift is not required for this operation.
Travel Path—At the pre-job/lift briefing a spotter(s) **SHALL** be designated to observe the load along the entire travel path (consider slopes and uneven surfaces).

Overhead Instructions—The Qualified Crane Operator and Rigger PIC and rigging crew **SHALL** physically verify the travel path is clear of overhead obstructions before beginning the lift.

Working Around the Load (Cone of Safety) - Absolutely NO ONE **SHALL** be under the load, or while it is being raised, lowered, or moved. The Qualified Crane Operator and Rigger PIC **SHALL** ensure that the area (in front of the WCG Drum Lift) is clear of non-essential personnel. Specific placement of operators and RCTs **SHALL** be established during the pre-lift meeting.

Securing the Drum Lifting Assembly—The rigging crew s **SHALL** inspect the WCG Drum Lift before lifting a drum.

Equipment List

Ensure the following equipment is present, has undergone physical inspection, is properly calibrated and is ready to support the critical lift steps:

- WCG Drum Lift

Work Steps for Loading a 55 Gallon Drum Using the WCG Drum Lift

Step 1 Verify the drums weighs less than 624 lb.

Step 2 Obtain key from key box, Insert key, and turn on the power to the drum lift.

Step 3 Using the drum lift pendent, lower the drum lift to the lower limit switch or until the bellyband of the lift cradle can grasp the drum evenly.

Step 4 Position the drum on the drum lift with the drum bolt ring accessible for lid removal when inside the glovebox.

Step 5 Close and secure the bellyband, ensuring the bag-off sleeve does not get caught on the bellyband.

Step 6 Raise the drum to the horizontal port and stop, leaving an adequate gap (approximately 12 inches) to mount the bag-off sleeve to the horizontal port.

Step 7 Bag on the parent drum in accordance with this procedure.

Step 8 Turn off the power to the drum lift, remove key, and place in key box.

APPENDIX 2
Page 1 of 1

WCRRF ALLOWED CONTAINER TYPES FOR REMEDIATION

The following "allowed" container types may be remediated in the WCRRF glovebox because there is no concern for hydrogen buildup within the container:

- Containers without a gasket (e.g. containers with slip lids, paint cans, "produce cans" and other similar containers) of any size
- Containers of any size with slip-on lids (with or without a gasket)
- Empty containers of any size
- Fiber board containers of any size
- Sealed containers of any size not containing TRU waste or free liquids
- Any containers with a volume < (less than) 4 liters
- Unvented 5- to 30-gal waste packages

APPENDIX 3
Page 1 of 1

EXAMPLE PREOPERATIONAL INSPECTION RECORD FOR OVERHEAD CRANES AND HOISTS

NOTE: Use these buttons to print or save the form, DO NOT use the browser tool bar. SAVE PRINT

Form 1489

Los Alamos NATIONAL LABORATORY EST. 1943

Preoperational Inspection Record for Overhead Cranes and Hoists

Inspector	Date Inspected	Location
Manufacturer and Type		Serial Number and Rated Capacity

Current Inspections

- Current Annual ANSI/OSHA Inspection Date: _____
- Current Annual Mechanical and Electrical (*if applicable*) PM's Date: _____
- Current Monthly Inspection Date: _____

Main or Auxiliary Hoist Rope			
• Is there any distortion such as kinking, crushing, unstranding, bird-caging, heat damage, or core protrusion?	☐ Yes	☐ No	☐ N/A
• Are there six randomly distorted broken wires per rope lay or three broken wires per strand per rope lay?	☐ Yes	☐ No	☐ N/A
• Is there wear of 1/3 the original diameter of outside individual wires?	☐ Yes	☐ No	☐ N/A
Load Chain			
• Is there elongation or distortion?	☐ Yes	☐ No	☒ N/A
• Any twisting, corrosion, pitting, or discoloration?	☐ Yes	☐ No	☒ N/A
• Any gouges, nicks, or weld splatter?	☐ Yes	☐ No	☒ N/A
Spooling, Reeving			
• Is there cross-winding?	☐ Yes	☐ No	☐ N/A
• Are the rope stays together and in alignment?	☐ Yes	☐ No	☐ N/A
• Is there any double winding or overwinding?	☐ Yes	☐ No	☐ N/A
• Is there minimum of two wraps at lowest position?	☐ Yes	☐ No	☐ N/A
Anchoring			
• Anchoring secured or installed in accordance with manufacturer's recommendations?	☐ Yes	☐ No	☐ N/A
• Is there minimum of two wire rope clips?	☐ Yes	☐ No	☒ N/A
Main or Auxiliary Hook			
• Is the throat opening not greater than 15% of normal?	☐ Yes	☐ No	☒ N/A
• Is there less than ten-degree twist out of plane?	☐ Yes	☐ No	☒ N/A
• Any deformities or cracks?	☐ Yes	☐ No	☒ N/A
• Are the safety latches present and functional?	☐ Yes	☐ No	☒ N/A
Markings			
• Are the rated capacities conspicuously posted?	☐ Yes	☐ No	☐ N/A
• Are the controllers properly marked? Are remote crane controllers affixed a label which contains the following information? (crane manufacturer, location, and other information specific to the unit being operated) _____	☐ Yes	☐ No	☐ N/A
• Is the main disconnect properly marked?	☐ Yes	☐ No	☐ N/A
Are the items listed functional?			
• Brakes	☐ Yes	☐ No	☐ N/A
• Controllers	☐ Yes	☐ No	☐ N/A
• Limit switches	☐ Yes	☐ No	☐ N/A
• Lights, warning devices	☐ Yes	☐ No	☒ N/A
• Trolley	☐ Yes	☐ No	☐ N/A
• Bridge	☐ Yes	☐ No	☒ N/A
• Main or auxiliary load	☐ Yes	☐ No	☐ N/A

Remarks:

Form 1489 (12/10)

EXAMPLE

APPENDIX 4
Page 1 of 1

VOLUMES OF CYLINDRICAL INNER CONTAINERS NEAR 4 LITERS

Diameter		Height		Volume (liters)
3”	7.6 cm	12”	30.5 cm	< 4
3”	7.6 cm	18”	45.7 cm	< 4
4”	10.7 cm	12”	30.5 cm	< 4
4”	10.7 cm	18”	45.7 cm	> 4
4.5”	11.4 cm	12”	30.5 cm	< 4
4.5”	11.4 cm	14”	35.6 cm	< 4
4.5”	11.4 cm	16”	40.6 cm	> 4
4.5”	11.4 cm	18”	45.7 cm	> 4
5”	12.7 cm	8”	20.3 cm	< 4
5”	12.7 cm	10”	24.5 cm	< 4
5”	12.7 cm	12”	30.5 cm	> 4
5”	12.7 cm	14”	35.6 cm	> 4
5.5”	14 cm	8”	20.3 cm	< 4
5.5”	14 cm	10”	24.5 cm	> 4
5.5”	14 cm	12”	30.5 cm	> 4
6”	15.2 cm	8”	20.3 cm	> 4
6”	15.2 cm	10”	24.5 cm	> 4
6.5”	16.5 cm	8”	20.3 cm	> 4
7”	17.8 cm	6.5”	16.5 cm	> 4

<4 = less than 4 liters and does <u>not</u> require remediation

> 4 = greater than 4 liters and requires remediation

APPENDIX 5
Page 1 of 1

FLOWCHART FOR PROCESSING OF HIGH DOSE ITEMS OF MIXED MATERIAL TYPES

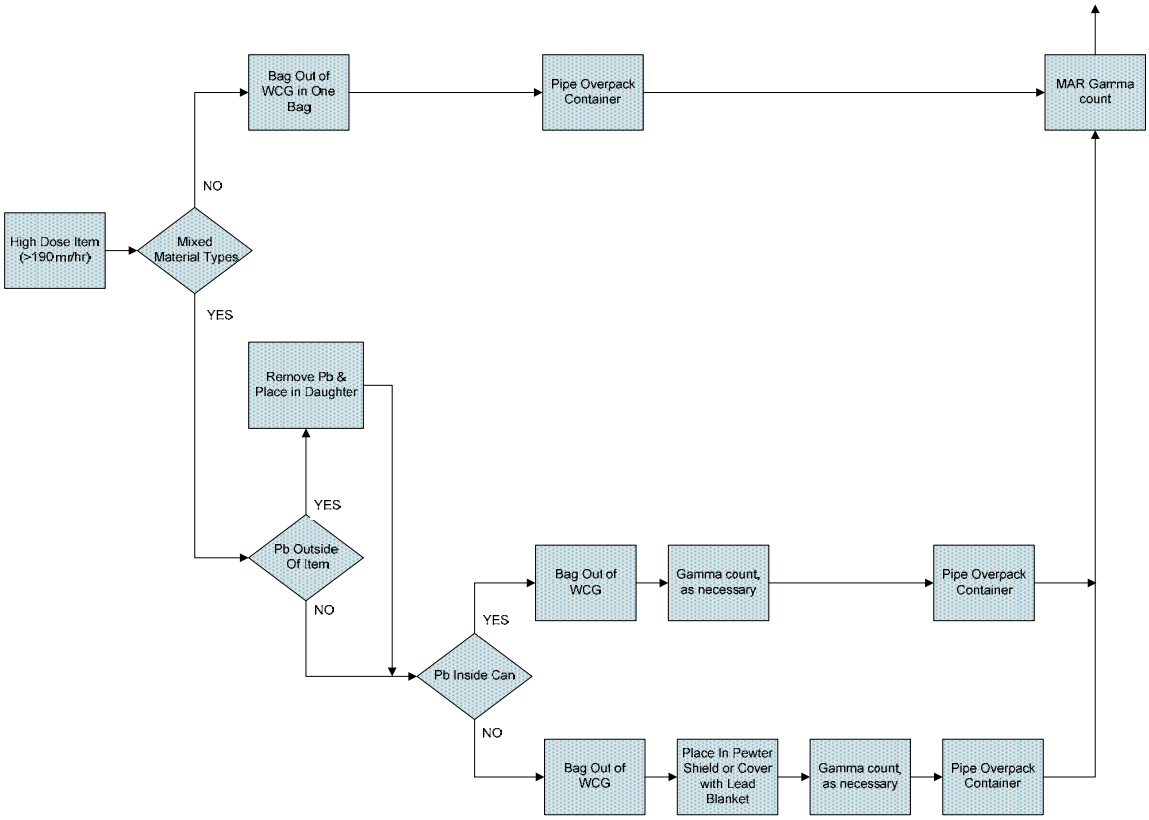

APPENDIX 6
Page 1 of 1

ADMINISTRATIVE CONTROL LOCK LOG SHEET

(Used when needed to track component manipulation)

NOTE: Refer to P315, Conduct of Operations Manual, Attachment 8, Section 8.1.5, for additional guidance.

Facility/Location: _____

Component No.	Authorized By (Shift Mgr.)	New Position	Positioned By	Verified By	Date/ Time	Restored By	Verified By	Date/ Time	Authorized By (Shift Mgr.)

APPENDIX 7

Page 1 of 1

MANUAL DRUM MOVEMENT SPECIAL INSTRUCTIONS

NOTE 1 *The following requirements below have been pre-approved in accordance with EP-DIV-Policy-20057, EWMO Health and Safety Policy.*

NOTE 2 *Any manual drum movement modifications or new scenario that may arise* ***SHALL*** *be performed in accordance with EP-DIV-Policy-20057.*

Manual Drum Movements within Transportainers:

- Two-person rule and a drum dolly chock to slide drums to and from the drum dolly and spill pallets
- Two-person rule to slide drums from one pallet to another
- Two-person rule to slide drums on the floor

Manual Drum movements to and from Scale:

- Mechanical means only

Manual Drum Movements between the 50-69 RBA and the CA

- Mechanical means
- Empty POCs mechanical mean only
- Empty 55 and 85s from pallet to dolly or dolly to pallet using two-person rule with a dolly chock

Manual Drum Movements to center of Scale

- Utilize mechanical means (e.g., drum grabber or versa lift)
- Two-person rule to slide drum to and from the center of the scale

Manual Movement of Drums onto Lift Table under the WCG

- Utilize versa lift, (if available) otherwise implement two-person rule to slide drum to and from the drum dolly and lift table with metatarsal guards

Manual Movement of Drums in Transport Vehicle for Receipt Inspection and Unloading

- Two-person rule to slide drums

ATTACHMENT 1
Page 1 of 4

WCRRF WCG WASTE PROCESSING DATA SHEET

4.1[6][B] Parent Waste Container No.: _____

6.2[4] Date Processed: _____

4.1[6][B] Prohibited Items:
☐ Sealed Containers > 4L ☐ Liquids ☐ Pressurized Containers ☐ N/A

4.1[6][B] Parent Waste Container RCRA Designations: _____

4.3[1]/4.3[2] **($)** TA-50-69 is in the OPERATION or WARM STANDBY MODE (TSR 1.2) ☐ OPERATIONS ☐ WARM STANDBY

4.3[4][B] Platform Scale: Equipment No.: _____
Cal. Due Date: _____

4.3[5][B] **($)** Three 1-Liter containers carbon spheroids or MET-L-X _____ (Initial and Date)
in WCG: (SAC 5.10.1.7.1)

4.3[6] **($)** Stationary Fire Watch has been established: ☐ N/A
(> 300 PE-Ci Equivalent Combustible) _____
(SAC 5.10.1.7.2) (Initial and Date)

4.3[7 [A] Parent Waste Container degraded, loss of integrity,
or weighs greater than 468 lb but less than or equal to 624 lb:
☐ YES ☐ NO ☐ N/A

4.3[8][D] WCG glove and bag-in/bag-out bag inspection: ☐ SAT ☐ UNSAT ☐ N/A

Performed By: _____ / _____ / _____ / _____
Waste Handling Tech (print) Signature Z # Date

ATTACHMENT 1
Page 2 of 4

4.1[6][B] Parent Waste Container No.: _____

5.[18] Prepared Parent Drum Weight (lb) including items secured to drum top, as applicable: _____ lb

6.2[5][A] Parent Drum Lead Blanket Weight (lb): _____ lb ☐ N/A

6.2[5][B]/ 6.2[6] Total Parent Drum Weight (lb) _____ lb

6.2[7] **($)** Total Parent Drum Weight < 624 lb (SR 4.5.1): ☐ SAT ☐ UNSAT

6.2[16] Retaining clips in place ☐ SAT ☐ UNSAT

6.2[18][D] Drum lift hinge pin retaining clip replaced._____/_____/_____ ☐N/A
Initials Z# Date

6.2[26] Approval to leave a parent drum attached to the WCG overnight:

_____/_____/_____/_____
EWMO-FOD (print) Signature Z # Date

ATTACHMENT 1
Page 3 of 4

4.1[6][B] Parent Waste Container No.: _____

Daughter Drums					
10.1[4]/10.2[4]	Daughter Drum No.				
10.1[4]	Daughter Drum Filter No.				
10.1[4]	Daughter Drum Bag Filter No.				
10.1[4]	Daughter Drum Purchase Order No.				
10.1[19][C]	WCG Fire Watch Stationed	☐ YES		☐ NO	☐ N/A
10.1[20][C][d]3/11.1[3]	WCG Fire Watch Secured	☐ YES		☐ NO	☐ N/A
10.2[4]	POC bag-on bag: Manufacturer				
	Model No.				
	Serial No.				
	Date of Manufacture				
10.2[5]	POC ID No				
10.2[6]/10.2[7][B]	POC Item Description				
10.2[13]	POC Assembly closed per Manufacturer's instructions. (Initial and Z#)				
10.2[14]	POC Assembly Gross Weight (lb)				
10.2[15]	POC Rad. Survey Results (mrem/hr)				
10.3[3][A]	Approx. Containerized Liquid Vol./Units				
10.3[5][A]	Free Liquid Volume/Units				
10.3[7][A]	Opaque/Non-penetrable Item Description:				
10.3[9][A]	PCB-contaminated Waste Description				
10.3[9][B]	PCB Item ID No.				
10.3[10]	Remaining Waste Description				
10.3[13]/10.4[10]/ 10.5[4]/10.6[10]	Daughter Drum % Full (%)				
10.5[3]/10.6[2]	Description Waste Added During Processing				

ATTACHMENT 1
Page 4 of 4

4.1[6][B] Parent Waste Container No.: _____

Comments: _____

_____
_____
_____
_____
_____
_____
_____
_____

11.1[1] Performed By: _____ / _____ / _____ / _____
Waste Handling Tech (print) Signature Z # Date

11.1[8] Reviewed By: _____ / _____ / _____ / _____
SOS or designee (print) Signature Z # Date/Time

ATTACHMENT 2
Page 1 of 2

WCRRF WCG DRUM LIFT INSPECTION DATA SHEET

6.1[2] Inspection Date: _____

6.1[4] Previous number of shaft bolt threads exposed:
- Upper Pulley Bolt Threads visible: _____
- Middle Pulley Bolt Threads visible: _____
- Lower Pulley Bolt Threads visible: _____

6.1[5] Current number of threads exposed out the end of the shaft bolt locknut:
- Upper Pulley Bolt Threads visible: _____
- Middle Pulley Bolt Threads visible: _____
- Lower Pulley Bolt Threads visible: _____

6.1[6] Shaft bolt end is flush with or extends out of the outer end of the shaft bolt locknut
- Upper Pulley Bolt Threads visible: ☐ YES ☐ NO
- Middle Pulley Bolt Threads visible: ☐ YES ☐ NO
- Lower Pulley Bolt Threads visible: ☐ YES ☐ NO

6.1[7] Shaft bolts do not show any sign of wear between the shaft bolt and the support flange (e.g., shaft not perpendicular to the flange plate):
- Upper Pulley Assembly: ☐ SAT ☐ UNSAT
- Middle Pulley Assembly: ☐ SAT ☐ UNSAT
- Lower Pulley Assembly: ☐ SAT ☐ UNSAT

6.1[9] New upper wire rope damage observed: ☐ YES ☐ NO

TABLE 3-1, UPPER WIRE ROPE DAMAGE

Description of Wire Rope Damage (e.g., wire break, corrosion, or pinch) (6.1[3]/6.1[10])	Previously Identified Damage (√) (6.1[3])	Damage Location from Hoist Drum (inches) (6.1[10])	Distance from damage to nearest wire break (inches) (6.1[10])

ATTACHMENT 2
Page 2 of 2

6.1[2] Inspection Date: _____

6.1[12] New lower wire rope damage observed: ☐ YES ☐ NO

TABLE 3-2, LOWER WIRE ROPE DAMAGE

Description of Wire Rope Damage (e.g., wire break, corrosion, or pinch) (6.1[3]/6.1[13])	Previously Identified Damage (√) (6.1[3])	Damage Location from Hoist Drum (inches) (6.1[13])	Distance from damage to nearest wire break (inches) (6.1[13])

6.1[14][A]/ 6.1[15] There are less than six randomly distributed broken wires in one rope lay or three broken wires in one strand in one rope lay.

☐ SAT ☐ UNSAT

Comments: _____

6.1[16][B]/ 11.1[1] Performed By: _____ / _____ / _____ / _____
Operator (print) Signature Z # Date

11.1[8] Reviewed By: _____ / _____ / _____ / _____
SOS or designee (print) Signature Z # Date/Time

ATTACHMENT 3
Page 1 of 1

WCRRF WCG BREACHING (OPENING) UNVENTED, SEALED WASTE PACKAGES

10.1[10][A] Parent Drum Identification #:_____ Page _____ of _____

Unvented-Sealed Waste Package type: (10.1[10][B])	☐ Metal 5- to 30-gal ☐ Non-metallic 5- to 30-gal ☐ < 5 gal	☐ Metal 5- to 30-gal ☐ Non-metallic 5- to 30-gal ☐ < 5 gal	☐ Metal 5- to 30-gal ☐ Non-metallic 5- to 30-gal ☐ < 5 gal	☐ Metal 5- to 30-gal ☐ Non-metallic 5- to 30-gal ☐ < 5 gal
($) Non-spark producing tools available in WCG. (SAC 5.10.1.6.1) (10.1[10][C])	☐ YES ☐ NO			
($)WCG electrical receptacles de-energized and locked open/off. (SAC 5.10.1.6.2) (10.1[10][D])	☐ SAT ☐ UNSAT			
($) 5- to 30-gal waste package lid restraint inspected for degradation (e.g., no indication of cracked parts, missing fasteners, loose or frayed parts, excessive wear, or unusual deformation), and determined to be capable of restricting lid. (SAC 5.10.1.5.1) (10.1[11][A])	☐ SAT ☐ UNSAT ☐ N/A < 5 gal	☐ SAT ☐ UNSAT ☐ N/A < 5 gal	☐ SAT ☐ UNSAT ☐ N/A < 5 gal	☐ SAT ☐ UNSAT ☐ N/A < 5 gal
($) Waste package lid restraint attached to waste package and proper installation verified. (SAC 5.10.1.5.1) (10.1[11][C])	☐ SAT ☐ UNSAT ☐ N/A < 5 gal	☐ SAT ☐ UNSAT ☐ N/A < 5 gal	☐ SAT ☐ UNSAT ☐ N/A < 5 gal	☐ SAT ☐ UNSAT ☐ N/A < 5 gal
($) Time 5- to 30-gal waste package vented. (Start Time) (SAC 5.10.1.5.2) or SAC 5.10.1.6.3) (10.1[11][E][f])/10.1[11][F][c]	_____ ☐ N/A < 5 gal	_____ ☐ N/A < 5 gal	_____ ☐ N/A < 5 gal	_____ ☐ N/A < 5 gal
($) Time since 5- to 30-gal waste package vented. (SAC 5.10.1.5.2) or SAC 5.10.1.6.3) (10.1[11][E][h])/10.1[11][F][e]	_____ ☐ N/A < 5 gal	_____ ☐ N/A < 5 gal	_____ ☐ N/A < 5 gal	_____ ☐ N/A < 5 gal
($) Elapsed time since 5- to 30-gal waste package vented is ≥ 30 minutes, and glovebox operations may resume and WCG electrical receptacles may be re-energized. (SAC 5.10.1.5.2) or SAC 5.10.1.6.3) (10.1[11][E][i]) 10.1[11][F][f]	☐ SAT ☐ UNSAT ☐ N/A < 5 gal	☐ SAT ☐ UNSAT ☐ N/A < 5 gal	☐ SAT ☐ UNSAT ☐ N/A < 5 gal	☐ SAT ☐ UNSAT ☐ N/A < 5 gal
($) Time < 5-gal waste package vented. (Start Time) (SAC 5.10.1.6.3) (10.1[12][A][f])	_____ ☐ N/A > 5 gal	_____ ☐ N/A > 5 gal	_____ ☐ N/A > 5 gal	_____ ☐ N/A > 5 gal
($) Time since < 5-gal waste package vented. (End Time) (SAC 5.10.1.6.3) (10.1[12][A][h])	_____ ☐ N/A > 5 gal	_____ ☐ N/A > 5 gal	_____ ☐ N/A > 5 gal	_____ ☐ N/A > 5 gal
($) Elapsed time since waste package vented is ≥ 30 minutes (SAC 5.10.1.6.3)	☐ SAT ☐ UNSAT	☐ SAT ☐ UNSAT	☐ SAT ☐ UNSAT	☐ SAT ☐ UNSAT
($) Lid restraint and waste package lid removed. (SAC 5.10.1.5.2 and 5.10.1.6.3) (10.1.[15])	_____	_____	_____	_____
($) WCG electrical receptacles may be re-energized. (SAC 5.10.1.6.3) (10.1[18])	_____ ☐ SAT ☐ UNSAT	_____ ☐ SAT ☐ UNSAT	_____ ☐ SAT ☐ UNSAT	_____ ☐ SAT ☐ UNSAT

Comments: _____

11.1[1] Performed By: _____ / _____ / _____ / _____
Operator (print) Signature Z # Date

11.1[8] Reviewed By: _____ / _____ / _____ / _____
SOS or designee (print) Signature Z # Date/Time

ATTACHMENT 4
Page 1 of 1

WCRRF WCG BREACHING (OPENING) 5- to 30-gal METAL UNVENTED, SEALED WASTE PACKAGE SURVEILLANCE

10.1[10][E][a] Waste Container ID: _____

10.1[10][E][b] **($)** 55-gal parent drum containing an unvented-sealed METAL 5- to 30-gal waste package grounded to the WCG with a grounding strap that is firmly attached at all ends to clean-bare metal surfaces. (SR 4.6.1) ☐ SAT ☐ UNSAT

10.1[10][E][c] **VERIFY** that the grounding strap is attached ☐ SAT ☐ UNSAT

10.1[11][D][a] **($)** Unvented-sealed METAL 5- to 30-gal waste package grounded to the WCG with a grounding strap that is firmly attached at all ends to clean-bare metal surfaces. (SR 4.6.1) ☐ SAT ☐ UNSAT

10.1[11][D][c] **VERIFY** that the grounding strap is attached ☐ SAT ☐ UNSAT

11.1[11[E] Verified By: _____ / _____ / _____ / _____
Print Signature Z # Date

11.1[11[E][c]/ 11.1[12][A][c] Drill set to 640 rpm or less _____
Initials/Z#

Comments: _____

_____

_____

_____

11.1[1] Performed By: _____ / _____ / _____ / _____
Waste Handling Tech (print) Signature Z # Date

11.1[2][D] Reviewed By: _____ / _____ / _____ / _____
CSE (print) Signature Z # Date

11.1[6][A] Acceptance criteria satisfied: ☐ YES ☐ NO

11.1[8] Reviewed By: _____ / _____ / _____ / _____
SOS or designee (print) Signature Z # Date/Time

ATTACHMENT 5
Page 1 of 1

WCRRF PROHIBITED ITEM COLLECTION DRUM DATA SHEET

Container No. (10.3[8][B][e]):	Type (10.3[8][B][e]): ☐ Pressurized Container ☐ Aerosol Cans ☐ Other: _____		Date Created (10.3[8][B][e]):	Page _____ of _____

Date Item Added (10.3[8][B][e])	Item ID No. (10.3[8][B][e])	Parent Container No. (10.3[8][B][e])	Parent Accumulation Start Date (10.3[8][B][e])	Parent EPA Codes (10.3[8][B][e])	Item Description (10.3[8][B][e])	Item Shape (10.3[8][B][e])	Item Size (10.3[8][B][e])	Item Labeling (10.3[8][B][e])	Item Weight (lb) (10.3[8][B][e])	Initials/Z# (10.3[8][B][e])

EP-WCRR-WO-DOP-1200, WCRRF SWB Preparation And Closure

LAUR-14-24882

Immediate Procedure Change (IPC) Cover		
Section 1 – Originator Request		
Document No.: EP-WCRR-WO-DOP-1200	Revision No.: 0	IPC No.: 1
Title: WCRRF SWB Preparation and Closure		

Description of need and requested action (Attach document mark-up and numbered additional sheets, if needed):

Revise procedure to correct SWB filter and pipe torque specifications in accordance with DOE/WIPP-11-3384, CBFO Approved Filter Vents, and WP 08-PT.01, Standard Waste Box Handling and Operations Manual. Make editorial corrections as necessary. This revision does not introduce any new hazards.

Originator Name (print):	Organization:	Z#:	Date:
Ron Smart	EWMO-PRO	200480	05/30/14

Section 2 –Reviews

Discipline:	Name:	Signature:	Date:
LTP-SSS SOM	John Guadagnoli / Randy Axtell	/s/ John Guadagnoli	06/02/14
LTP-DDP ES OM	Darrel Blain	/s/ Darrel Blain	06/18/14
LTP-DDP ES OM	Jose Jerez	/s/ Jose Jerez	06/19/14
LTP-DDP ES SOS	Gilbert Martinez	/s/ Gilbert Martine	06/19/14
QA	Robert Trujillo	/s/ Robert Trujillo	06/03/14
EnergySolutions OM	Leah Lavallee	/s/ Leah Lavallee	06/04/14
Engineering	Robert Griffis	/s/ Robert Griffis	06/02/14

USQ/USI Number: WCRRF-14-316-D, R.0 ☐ N/A

Section 3– Final Approvals

FOD Concurrence:	Print Name and Title:	Z#:	Date:
/s/ John Guadagnoli	John Guadagnoli, WCRRF SOM	125695	06/02/14
☒ Permanent ☐ Limited Use	Effective Date: 06/26/14 Expiration Date: N/A		

Comments:

Responsible Line Manager Signature:	Print Name and Title:	Z#:	Date:
	Gail Welsh, LTP-SSS OM	114849	6-26-14

WCRRF SWB
Preparation and Closure

Effective Date: 1-29-2014

Hazard Class:	☐	Low	☒	Moderate	☐	High/Complex
Usage Mode:	☐	Reference	☒	UET	☐	Both UET and Reference

The Responsible Manager has determined that the following organizations' review/concurrence is required for the initial document, and for major revisions a same type and level review is required. Review documentation is contained in the Document History File:

Engineering
Quality Assurance
Radiation Protection
Industrial Hygiene and Safety
Subject-Matter Expert
Shift Operations Manager

Responsible Manager, LTP-DDP, Operations Manager

Name (print)	Z#	Signature	Date
Lou Jalbert	121997	/s/ L Jalbert	1-27-2014

Classification Review: ☐ N/A ☒ Unclassified ☐ UCNI ☐ Classified _____

Name (print)	Z#	Signature	Date
Chris Pilcher	233242	/s/ Chris Pilcher	01/24/14

Working Copy / Information Only (circle one)
Initials / Date: _____/_____

This document fully satisfies the requirements of P300, Integrated Work Management, in order to systematically describe the work activity, the associated hazards, and the controls that **MUST** be employed to mitigate the risks.

REVISION HISTORY

Document No./Revision No.	Issue Date	Action	Description
EP-WCRR-WO-DOP-0222, R.0	May 2007	New Document	
EP-WCRR-WO-DOP-0222, R.1	November 2007	Major Revision	Added steps for removal of stripped bolts, removal/insertion of sleeves, and tapping of filter and sleeve threads.
EP-WCRR-WO-DOP-0222, R.2	November 12, 2013	Major Revision	Revise procedure to incorporate WCATS implementation and make editorial corrections (e.g., change title and reformat) as necessary. This revision is a total rewrite and revision bars have been omitted.
EP-WCRR-WO-DOP-1200, R.0	January 29, 2014	Major Revision	Revise procedure to incorporate updates for P-101-25. Rev bars in the left column display location of changes. New procedure number created to align with Document control. No changes were made to the Job Hazard Analysis in this revision.
EP-WCRR-WO-DOP-1200, R.0 IPC-1	June 26, 2014	IPC	Revise procedure to correct SWB filter and pipe torque specifications in accordance with DOE/WIPP-11-3384, CBFO Approved Filter Vents, and WP 08-PT.01, Standard Waste Box Handling and Operations Manual. Make editorial corrections as necessary. This revision does not introduce any new hazards.

TABLE OF CONTENTS

Section Page

TITLE PAGE 1
CHANGE SUMMARY 2
TABLE OF CONTENTS 8

1. PURPOSE 4

2. SCOPE 4

3. PRECAUTIONS AND LIMITATIONS 4

4. PREREQUISITE ACTIONS 8
4.1 Planning and Coordination 8
4.2 Special Tools and Equipment, Parts, and Supplies 9
4.2.1 Measuring and Test Equipment (M&TE) 9
4.2.2 Special Tools and Equipment 9
4.2.3 Consumables 10
4.3 Field Preparation 10

5. INSTRUCTIONS—STANDARD WASTE BOX (SWB) PREPARATION 11

6. INSTRUCTIONS—SWB CLOSURE 20

7. POST-PERFORMANCE ACTIVITY 29
7.1 Disposition 29
7.2 Records Processing 30

8. REFERENCES 31

Appendices
Appendix 1, Standard Waste Box Closure Socket Flat Head Cap Screw Installation Pattern 32
Appendix 2, Nuclear Filter Technology Filtered Vent Seals 33

Attachments
Attachment 1, WCRRF Standard Waste Box (SWB) Preparation Data Sheet 34
Attachment 2, WCRRF Standard Waste Box (SWB) Closure Data Sheet 35

1. PURPOSE

This procedure provides instructions for the activities associated with the preparation and closing of standard waste boxes (SWBs) at the Waste Characterization, Reduction, and Repackaging Facility (WCRRF).

2. SCOPE

This procedure applies to all personnel that supervise or perform overpack activities in WCRRF.

This procedure addresses the following activities:

- Preparing SWBs
- Closing SWBs

Overpack drums within an SWB may contain a degraded or loss of integrity waste container.

This procedure is performed in conjunction with the Waste Compliance and Tracking System (WCATS) desktop application in order to update SWB information following the closing of an SWB and in conjunction with a WCATS mobile device or WCATS desktop application for performing the TRU DRUM PREPARATION task.

3. PRECAUTIONS AND LIMITATIONS

- Handling of TRU Waste Containers using industrial forklifts or cranes present several hazards; including container breech, dropped containers, obstructed areas, inclines, uneven surfaces, and pedestrians. Operators **SHALL** comply with the safe operating practices for use of powered industrial trucks and safety basis requirements for the safe handling of TRU waste containers. Adhere to the requirements of EP-DIV-DOP-20086 EWMO Division Specific Forklift and Drum Handler Equipment Operations.

- When a worker observes an unsafe condition or act that may pose an imminent danger or other safety concern/hazard, the worker has the authority and responsibility to inform the worker engaged in the work and request that the work activity be paused and/or stopped based on the risk posed to the individual, the employees, the environment, or the facility in accordance with P101-18, Procedure for Pause/Stop Work.

3. PRECAUTIONS AND LIMITATIONS (continued)

- Activities, items, and containers **SHALL** satisfy approved design specifications, regulatory requirements, process-specific parameters, and procedural requirements. Activities, items, or containers that do not conform to the approved specifications and requirements are considered nonconforming and Nonconformance Reports (NCRs) **SHALL** be generated in accordance with P330-6, Nonconformance Reporting, as required.

- Forklift operators must exercise extreme caution to ensure personnel are away from the immediate vicinity of forklift operations, and utilize spotters for all high lifts to prevent injury to personnel, equipment and material damage from industrial equipment use and falling objects.

- When using a pry bar to move containers in order to allow access, ensure that the pry bar is securely positioned (e.g., wedged) and that both feet are firmly placed on a non-slip surface to prevent personnel injury due to the sudden movement of the pry bar or loss of footage.

- Do not disturb or touch wild animals, dead animals, nesting areas, droppings, or surfaces with mold growth to avoid exposure to biological threats (e.g., snakes, rodents, rodent droppings, Hanta virus, Bubonic plague, spiders, West Nile virus, molds) and notify the WCRRF Operations Center of the situation.

- To comply with the intent of the ALARA Program, all personnel **SHALL** apply the principles of time, distance, and shielding when working with radiological materials.

- Only trained and qualified personnel may cross the “cone of safety” demarcation while a load is suspended.

- All critical lift plans executed by LANL personnel **SHALL** be developed using Attachment B, LANL Critical Lift Plan, of P101-25, Cranes, Hoists, Lifting Devices, and Rigging Equipment.

- The instructions in this procedure satisfy the P101-25 ordinary lift requirements and the use of LANL Form 1611, Ordinary Lift Procedure, is not required. Not all of the items listed on Form 1611 are captured in this procedure because this procedure is performed using gantry cranes and forklifts in preapproved locations and lifts standard waste containers of a known size and volume.

3. PRECAUTIONS AND LIMITATIONS (continued)

- Forklift operations are governed by the LANL procedure P101-4, Forklift and Powered Industrial Trucks. P101-4 requires the completion of the applicable sections of a LANL procedure P101-25 Attachment B for critical lifts involving a forklift or powered industrial truck. Forklift operations not involving a critical lift (e.g., load suspended below the forks of the forklift) are not required to comply with the requirements of P101-25.

- Support Services Subcontractors executing this procedure SHALL comply with the safety and health requirements documented in contractual agreements with the LANL.

- Any manual movements of 55-gal and larger drums, whether empty or containing waste, without mechanical assistance, **SHALL** only be performed as a last resort and with written (e.g., email or memorandum) approval from one of the following individuals:
  - Program Director or Deputy
  - EWMO-FOD or Deputy
  - Project Manager

  Written approval **SHALL** contain a description of the activity to be performed and the non-mechanically assisted method approved to be used. A copy of the written approval **SHALL** be maintained in the WCRRF Operations Center.

- Avoid slips, trips, and falls by wearing the proper footwear with slip-resistant soles and using handrails when using stairs. Use established pathways when available and avoid walking on uneven or unstable surfaces.

- SWBs and associated equipment (i.e., closure rings, fasteners, etc.) can have sharp or rough edges. Wear appropriate PPE when handling SWBs and overpacks. Keep fingers and hands clear of pinch points during container movements.

- Personal Protective Equipment (PPE) **SHALL** be worn when performing opening, sealing, or overpacking operations, in accordance with applicable procedures, radiological work permits (RWPs), and specific facility requirements.

3. PRECAUTIONS AND LIMITATIONS (continued)

- High temperature and humidity; use of respirators and impermeable or multilayered work clothing; limited air movement; physical exertion; poor physical condition; some medications; and inadequate tolerance for hot workplaces may result in heat stress. In order to reduce the potential of heat stress the following activities should be practiced:
  - Allow sufficient time for proper acclimatization to heat
  - Increase fluid and electrolyte intake before and after work
  - Use an Environment, Safety, and Health (ES&H) approved work/rest regimen
  - Recognize the early symptoms of heat stress
  - Consider heat stress when selecting personal protective equipment
  - Utilize a Wet Bulb Globe Temperature (WBGT) when deemed necessary by IHS staff

- Hazardous waste containers with liquids (any amount or configuration) that have not been solidified (absorbed) **SHALL** be managed on secondary containment pallets.

- The most current list of Waste Isolation Pilot Plant (WIPP)-approved filtered vents are listed on DOE/WIPP 11-3384, CBFO Approved Filter Vents.

- Not Applicable (N/A) is documented on the attachments during the performance of this procedure indicating information that is not required to be recorded.

- This procedure contains special procedure step markings. **($)** is used to identify steps that implement WCRRF Safety Basis requirements. Steps containing **($)** may not be changed without Engineering approval to ensure the safety envelope is maintained.

- **($)** TRU WASTE CONTAINERS **SHALL** be equipped with a WIPP-approved filtered vent and the vent **SHALL** be free of obvious obstructions. [SAC 5.10.2.3(3)]

- Radiological surveys for personnel and equipment may be performed at any time during the performance of this procedure as deemed necessary by Radiation Protection (RP).

- The Class 2 laser scanning head on the WCATS mobile device can cause eye injury if eye is exposed to the beam. Do not allow eyes of user or observers to become exposed to laser beam.

- The WCATS mobile device contains a lithium-ion battery. Exposure to extreme temperatures (greater than 140 °F) may cause battery to explode. Do not store the WCATS mobile device where temperatures may exceed 140 °F. Keep mobile device out of direct sunlight for extended periods of time when not in use. Do not incinerate, mutilate, short circuit, or disassemble the battery pack. Do not dispose of in municipal waste receptacles. Dispose of in properly marked universal waste disposal areas.

3. PRECAUTIONS AND LIMITATIONS (continued)

- If the entire WCATS should become inoperable, before performing MAR related activity the operator notifies their immediate supervisor and contacts the WCRRF Operations Center for guidance and direction.

- WCATS mobile device applications may be performed on the WCATS desktop application.

4. PREREQUISITE ACTIONS

NOTE *The listed Prerequisite Actions may be completed in any order.*

4.1 Planning and Coordination

Supervisor or designee

[1] **ENSURE** that the current revision of this document is available, and **IDENTIFY** this document as Working Copy or Information Only on the Title Page.

[2] **ENSURE** that a pre-evolution briefing is conducted and documented for all personnel involved in the performance of this procedure, in accordance with EP-DIV-AP-0112, EWMO Pre-Job Briefings.

[3] **ENSURE** the performance of this procedure has been properly scheduled on the WCRRF facility schedule.

[4] **ENSURE** that an RWP for the planned activity has been issued.

[5] **ENSURE** that, as a minimum, the following personnel trained to the use of this procedure are available for the performance of this procedure, as required:
- Two Radiological Control Technicians (RCTs)
- Two Waste Handling Operators
- One Person-in-Charge (PIC) (e.g., supervisor)

[6] **ENSURE** that the TRU daughter waste container labels (e.g., Shorty barcode labels) have been obtained from the Waste Help Team (wastehelp@lanl.gov), as necessary.

4.2 Special Tools and Equipment, Parts, and Supplies

4.2.1 Measuring and Test Equipment (M&TE)

NOTE *Torque wrenches are calibrated either as a percentage of full scale or a percentage of indicated value. The torque wrench accuracy information is found on the Calibration Certificate document. Torque wrenches are not calibrated in, nor are they to be used below 20% of their full range.*

Supervisor or designee

IPC-1

[1] **ENSURE** that the following measuring and test equipment is available, as required:
- Torque wrench calibrated to and capable of torquing 0 to 216 in-lb (0 to 18 ft-lb)
- Torque wrench calibrated to and capable of torquing 25 to 75 ft-lb

[2] **IF** a torque wrench has exceeded the calibration due date,
THEN:

[A] **LABEL** or **MARK** the torque wrench as not to be used.

[B] **OBTAIN** another torque wrench that is within the calibration due date.

4.2.2 Special Tools and Equipment

Supervisor or designee

[1] **ENSURE** that the following special tools and equipment are available, as required:
- 5/16 in. long-arm hex key
- 5/16 in. hex bit socket
- 15/16 in. socket
- 15/16 in. open end or box wrench
- 9/16 in. long-arm hex key
- 9/16 in. hex bit socket
- 9/16 in. socket
- 9/16 in. open end or box wrench
- 1-1/2 in. 6 or 12 point socket for filter installation
- Ratchet drive wrench
- Lineup bar (bull or drift pin) with 3/8” rounded point
- 1/4 in.-20 UNC x 0.29” swivel hoist ring
- Certified hoisting and rigging equipment (e.g., slings, attachments)
- Rivet Installation Header Tool (Supplier: Bolhof RIVNUT™. Options C-722 Wrench Type Header, C-900 Model A or C-362 Pneumatic-Hydraulic Header)

4.2.2 Special Tools and Equipment (continued)

- 3/4 in. – 14 NPSM or 3/4 in. – 14 NPT thread tap
- 1/2 in. – 13 UNC thread tap
- Hacksaw and blades
- Vice grips or equivalent
- Channel locks or equivalent
- Certified Crane
- Rivnut removal tool (e.g., dikes, wire cutters, or chisel and hammer)
- WCATS mobile device

4.2.3 Consumables

Supervisor or designee

[1] **ENSURE** that the following consumables are available, as required:

- Absorbent wipes
- WIPP-approved filtered vents (e.g., NucFil-019DS, NucFil-13, or NucFil-072S)
- Decontamination supplies
- RP-approved Tape
- Kimwipes (lint-free wipes)
- Fantastik® cleaner or equivalent
- Nitrile gloves and apron for rust inhibitor removal
- Rivets (Supplier Bolhof RIVNUT™, Part Number S50-3069)
- 1/2 in.-13 x 1 3/4 in. UNC Socket Flat Head Cap Screws (SFHCS) (for SWB lid assembly), Part Number 91263A608
- Thread-locker (e.g., Loctite® 271 or Loctite® 680)
- Thread sealant (e.g., Loctite® 246)
- Lubricating oil (e.g., WD-40)
- RTV silicone gasket maker (e.g., Loctite® 598)
- RTV-732 sealant or equivalent
- Labels (e.g., radioactive and waste container)

4.3 Field Preparation

Supervisor or Waste Handling Operator

[1] **ENSURE** that the hoisting and rigging materials (e.g., lifting magnets and slings and crane) have been inspected and are approved for use in accordance with P101-25, Cranes, Hoists, Lifting Devices, and Rigging Equipment, as necessary.

5. INSTRUCTIONS—STANDARD WASTE BOX (SWB) PREPARATION

This section is a stand-alone section and may be performed independently of, or in conjunction with, other Performance sections.

NOTE 1 *Radiological surveys may be performed as determined necessary [e.g., by an RP representative (e.g., RCT)] any time during the performance of this procedure.*

NOTE 2 *The TRU DRUM PREPARATION task on the WCATS mobile device may be performed in conjunction with the performance of the physical build of an SWB.*

Supervisor or Waste Handing Operator

[1] **ENSURE** that the prerequisite actions are completed.

Waste Handling Operator

[2] **OBTAIN** a DOT 7A Type A certified SWB.

[3] **IF** the empty SWB had previously been loaded (used),
THEN:

[A] **ENSURE** that the SWB filtered vents (2) and pipe plugs (2) have been removed.

[B] **IF** radiological contamination is detected during evolution,
THEN FOLLOW the direction of the RCT and RWP.

[4] **VISUALLY INSPECT** the SWB for any major damage (i.e., significant deformation, punctures, tears, or corrosion) which would render the container unusable and **DETERMINE** whether the SWB lid number matches the SWB number.

[5] **IF** the SWB fails the visual inspection,
OR the SWB lid number does **NOT** match the SWB number,
THEN:

[A] **IDENTIFY** (e.g., tag or mark) the SWB indicating that it is defective.

[B] **SEGREGATE** the SWB in order to prevent the item from being used.

5. INSTRUCTIONS—STANDARD WASTE BOX (SWB) PREPARATION (continued)

[C] **NOTIFY** supervision of the discrepancy.

NOTE 1 *A Quality Assurance (QA) representative may be contacted for assistance with the NCR process.*

NOTE 2 *The NCR may be initiated at an operationally convenient time.*

Supervisor

[D] **ENSURE** that an NCR is initiated in accordance with P330-6, Nonconformance Reporting, as required.

Waste Handling Operator

[E] **GO** to Step 5.[2].

NOTE *Some of the items in the following step may be verified at various times during the performance of this procedure.*

[6] **ENSURE** that all assembly components are present, including body assembly (1 each), lid assembly (1 each), gasket assembly (4 pieces), pipe plugs (2 each), SFHCSs (42 each), and WIPP-approved filtered vents (2 each).

[7] **IF** the SWB lid has been removed,
THEN GO to Step 5.[17].

[8] **REMOVE** the SFHCSs from the SWB lid, and **RETAIN** the SFHCSs for re-installation at a later time.

[9] **IF** an SWB SFHCS **CANNOT** be removed (e.g., stripped SFHCS),
THEN REMOVE the SFHCS head (e.g., hacksaw), as necessary.

[10] **ATTACH** appropriate rigging equipment 1/4-20 UNC-2A X .29-in. long swivel hoist ring <u>or</u> two 6 in. x 9 in magnetic assemblies (150 lb capacity for a 1/8 in. thick lid) to the SWB lid.

[11] **IF** a 1/4-20 UNC-2A X .29-in. long swivel hoist ring was installed,
THEN torque the 1/4-20 UNC-2A X .29-in. long swivel hoist ring to approximately 6 ft-lb (72 in-lb) ensuring that full thread engagement is achieved.

5. INSTRUCTIONS—STANDARD WASTE BOX (SWB) PREPARATION (continued)

[12] **RIG** a 2 in. x 4 ft sling or equivalent (capacity greater than or equal to 3,200 lb) to the magnetic assemblies or appropriate rigging equipment (e.g., swivel hoist ring), as required.

[13] **ENSURE** that a spreader bar is properly placed and secured on the forklift.

[14] **SECURE** the slings to the hook on the bottom of the spreader bar.

WARNING

Pinch points will be present between the lid and the body shell flange. Keep hands and fingers clear during lid removal to prevent injury.

[15] **SLOWLY LIFT** the SWB lid upward/off and clear of the SWB body shell flange.

CAUTION

It is recommended that the lid be placed on suitable support blocking to prevent contact of the lid flange with the ground or floor. This will preclude damage to the edge of the lid that forms the gasket sealing surface.

[16] **CAREFULLY LOWER** the SWB lid to a safe cribbing or storage area.

[17] **VISUALLY INSPECT** SWB lid for defects that would prevent the SWB from being used, and **VERIFY** that there is a total of 42 SFHCSs.

[18] **IF** the SWB lid fails the visual inspection,
OR the SWB lid number does **NOT** match the SWB number,
THEN:

[A] **IDENTIFY** (e.g., tag or mark) the SWB indicating that it is defective.

[B] **SEGREGATE** the SWB in order to prevent the item from being used.

[C] **NOTIFY** supervision of the discrepancy.

5. INSTRUCTIONS—STANDARD WASTE BOX (SWB) PREPARATION (continued)

NOTE 1 *A QA representative may be contacted for assistance with the NCR process.*

NOTE 2 *The NCR may be initiated at an operationally convenient time.*

Supervisor

[D] **ENSURE** that an NCR is initiated in accordance with P330-6, as required.

Waste Handling Operator

[E] **GO** to Step 5.[2].

[19] **RECORD** the SWB serial number on Attachment 1, WCRRF Standard Waste Box (SWB) Preparation Data Sheet.

[20] **OBTAIN** two WIPP-approved filtered vents (e.g., NucFil-019DS or NucFil-013) and two 3/4 in. American National Standard Taper Pipe Thread (NPT) SWB plugs.

NOTE *Lubricating oil (i.e., WD-40 or equivalent) may be used for cleaning of threads.*

[21] **CLEAN** the threads of the WIPP-approved filtered vents or vent port, as necessary.

WARNING

To prevent personnel injury from sharp burrs and edges when scoring a stripped rivnut® using a scoring tool, leather gloves and safety glasses with side shields SHALL be worn.

NOTE *All of the SWB gasket may be removed because the entire SWB gasket is to be replaced during closure.*

[22] **IF** a rivnut® is loose or rotates,
THEN:

[A] **REMOVE** the portion of the SWB gasket around the rivnut® to be repaired, as necessary.

[B] **SCORE** the stripped rivnut® using a scoring tool (e.g., dike or chisel) in several locations (e.g., three) around the upper flange of the rivnut®.

[C] **CRIMP** the scored rivnut®.

5. INSTRUCTIONS—STANDARD WASTE BOX (SWB) PREPARATION (continued)

[D] **FORCE** the rivnut® into the SWB sealing surface channel.

[E] **INSTALL** a new rivnut® using a Rivet Installation Header Tool or equivalent.

[23] **IF** a rivnut® has minor thread deformation (e.g., burrs or cross thread),
THEN CORRECT the deformation by running a 1/2 in.-13 UNC thread tap through the rivnut®.

[24] **IF** WIPP-approved filtered vents have either an NPT or an American National Straight Pipe Thread for Mechanical Joints (NPSM) threaded body,
THEN REMOVE the rubber gaskets, if desired.

WARNING

Due to skin allergen hazard, nitrile, pylox, or trionic gloves SHALL be worn when applying Loctite®.

[25] **APPLY** a thread-locker (e.g., Loctite® 271 or Loctite® 680) to the first three threads of two WIPP-approved filtered vents.

[26] **ENGAGE** the threads of the WIPP-approved filtered vents in two 3/4 in. plug holes.

NOTE *The number of engaged threads can be determined by counting two full rotations of the WIPP-approved filtered vent.*

[27] **HAND SCREW** the two WIPP-approved filtered vents into the 3/4 in. plug holes (from outside of the SWB) until a minimum of two WIPP-approved filtered vent threads are engaged in the plug holes.

[28] **IF** a WIPP-approved filtered vent **CANNOT** be installed with a minimum of two threads engaged in the plug hole,
AND multiple filters and plug holes have been tried,
THEN:

[A] **REMOVE** the WIPP-approved filtered vent that could <u>not</u> be installed.

5. INSTRUCTIONS—STANDARD WASTE BOX (SWB) PREPARATION (continued)

WARNING

Tapping threads can create sharp burrs and edges. Wear leather gloves and safety glasses with side shields when tapping threads.

NOTE *A 3/4 in. – 14 NPSM threaded tap is used for SWBs manufactured after April 2011 and a 3/4 in. – 14 NPT threaded tap is used for SWBs manufactured on or before April 2011.*

[B] **TAP** the plug hole using the appropriate size tap (i.e., 3/4 in. – 14 NPSM or 3/4 in. – 14 NPT thread tap).

[C] **REPEAT** Steps 5.[25] through 5.[27].

[29] **IF** a WIPP-approved filtered vent **CANNOT** be installed with a minimum of two threads engaged in the plug hole,
THEN:

[A] **REMOVE** the WIPP-approved filtered vent that could not be installed.

[B] **REPEAT** Steps 5.[25] through 5.[28] using a different WIPP-approved filtered vent or plug hole.

[30] **RECORD** the WIPP-approved filtered vent torque wrench information on Attachment 1.

IPC-1

[31] **TORQUE** the WIPP-approved filtered vents to a nominal 180 in.-lb (156 to 204 in.-lb), and **RECORD** the actual torque values on Attachment 1.

[32] **RECORD** the WIPP-approved filtered vent information on Attachment 1.

NOTE *Two SWB plugs are installed in the 3/4 in. plug holes that do not have the WIPP-approved filtered vents installed.*

[33] **APPLY** a thread-locker (e.g., Loctite® 271 or Loctite® 680) to the threads of the two SWB plugs.

[34] **ENGAGE** the threads of the SWB plugs in two 3/4 in. plug holes.

5. INSTRUCTIONS—STANDARD WASTE BOX (SWB) PREPARATION (continued)

NOTE *The number of engaged threads can be determined by counting two full rotations of the SWB plug.*

[35] **HAND SCREW** the two SWB plugs into the two remaining 3/4 in. plug holes until a minimum of two SWB plug threads are engaged in the plug hole.

[36] **IF** an SWB plug **CANNOT** be installed with a minimum of two threads engaged in the plug hole,
AND multiple SWB plugs have been tried,
THEN:

[A] **REMOVE** the SWB plug that could not be installed.

WARNING

Tapping threads can create sharp burrs and edges. Wear leather gloves and safety glasses with side shields when tapping threads.

NOTE *A 3/4 in. – 14 NPSM threaded tap is used for SWBs manufactured after April 2011 and a 3/4 in. – 14 NPT threaded tap is used for SWBs manufactured on or before April 2011.*

[B] **TAP** the plug hole using the appropriate size tap (i.e., 3/4 in. – 14 NPSM or 3/4 in. – 14 NPT thread tap).

[C] **REPEAT** Steps 5.[33] through 5.[35].

[37] **IF** an SWB plug **CANNOT** be installed with a minimum of two threads engaged in the vent port,
THEN:

[A] **REMOVE** the SWB plug that could not be installed.

[B] **REPEAT** Steps 5.[33] through 5.[36] using a different SWB plug.

[38] **TORQUE** the SWB plugs to a nominal 120 in.-lb (60 to 180 in.-lb), and **RECORD** the actual torque values on Attachment 1.

5. INSTRUCTIONS—STANDARD WASTE BOX (SWB) PREPARATION (continued)

[39] **REMOVE** all excess pipe plug sealant from the exterior and interior of the packaging.

NOTE 1 *The TRU DRUM PREPARATION task on the WCATS mobile device may be performed out of sequence.*

NOTE 2 *The following step may be performed at a later time when the prepared SWB is to be loaded.*

[40] **IF** the prepared SWB is to be labeled as follows,
THEN:

[A] **ENSURE** that a TRU DRUM PREPARATION task has been completed for the SWB using a WCATS application.

[B] **ATTACH** one SWB identification (ID) barcode label (Shorty label) near the center on <u>each curved side</u> between the raised bars of the SWB.

[C] **ATTACH** one SWB ID barcode label (Shorty label) to the center of the top of the SWB above the top raised bar.

[D] **ATTACH** one SWB ID barcode label (Shorty label) near the center <u>on each flat side</u> of the SWB.

[41] **IF** the prepared SWB is **NOT** to be used until a later time,
THEN CLOSE the SWB as follows:

[A] **ATTACH** appropriate rigging equipment 1/4-20 UNC-2A X .29-in. long swivel hoist ring <u>or</u> two 6 in. x 9 in magnetic assemblies (150 lb capacity for a 1/8 in. thick lid) to the SWB lid.

[B] **IF** a 1/4-20 UNC-2A X .29-in. long swivel hoist ring was installed,
THEN TORQUE the 1/4-20 UNC-2A X .29-in. long swivel hoist ring to approximately
6 ft-lb (72 in-lb) ensuring that full thread engagement is achieved.

5. INSTRUCTIONS—STANDARD WASTE BOX (SWB) PREPARATION (continued)

[C] **RIG** a 2 in. x 4 ft sling or equivalent (capacity greater than or equal to 3,200 lb) to the magnetic assemblies or appropriate rigging equipment (e.g., swivel hoist ring), as required.

[D] **ENSURE** that a spreader bar is properly attached and secured on the forklift.

[E] **SECURE** the sling to the hook on the bottom of the spreader bar.

[F] **SLOWLY LIFT** and **MOVE** the SWB lid to the SWB.

[G] **LIFT** the SWB lid above the SWB and center the SWB lid over the SWB body shell flange.

WARNING

Pinch points will be present between the lid and the body shell flange. Keep hands and fingers clear during lid installation to prevent injury.

[H] **SLOWLY LOWER** the SWB lid onto the SWB body shell flange.

[I] **INSTALL** and **HAND TIGHTEN** a sufficient number (minimum of four) of SFHCSs in order to secure the SWB lid for movement.

[J] **TIGHTEN** the SFHCSs with a wrench or ratchet enough to keep the lid from shifting.

[K] **REMOVE** the lid lift rigging and hoist ring as required.

[42] **ATTACH** the original Attachment 1 to the SWB or **ENSURE** that Attachment 1 is forwarded to the applicable supervisor.

6. INSTRUCTIONS—SWB CLOSURE

This section is a stand-alone section and may be performed independently of, or in conjunction with, other Instructions sections.

NOTE 1 *Radiological surveys may be performed as determined necessary [e.g., by an RP representative (e.g., RCT)] any time during the performance of this procedure.*

Supervisor or Waste Handling Operator

[1] **ENSURE** that the prerequisite actions are completed.

Waste Handling Operator

[2] **IF** radiological contamination is detected during evolution,
THEN FOLLOW the direction of the RCT and RWP.

[3] **RECORD** the SWB serial number on Attachment 2, WCRRF Standard Waste Box (SWB) Closure Data Sheet.

[4] **ENSURE** that the drums or package within the SWB are adequately braced, as required, and supported to prevent movement inside the SWB, if required.

[5] **ENSURE** that dunnage drums have been loaded into the SWB, as necessary, in accordance with EP-WCRR-WO-DOP-1197, WCRRF Loading/Unloading SWB or 85-Gal Drum.

[6] **IF** the SWB has been previously loaded (used),
THEN:

[A] **MANUALLY REMOVE** the SWB lid gasket by stripping the SWB lid gasket from the SWB body flange.

WARNING

Cutting tools are very sharp and cut resistant gloves (e.g., leather gloves) are to be worn when using/handling cutting tools to prevent severe personnel injury.

[B] **REMOVE** any residual gasket components or adhesive, using a flexible spatula, putty knife, or similar tool.

6. INSTRUCTIONS—SWB CLOSURE (continued)

[C] **IF** a stripped SFHCS is encountered,
THEN:

[a] **IF** a portion of the SFHCS is in the rivnut®,
THEN REMOVE the remaining portion of the SFHCS (e.g., channel locks holding the rivnut® and unscrew the SFHCS) flush with the SWB sealing surface.

[b] **IF** a portion of the rivnut® shoulder remains above the SWB sealing surface,
THEN:

1. **SCORE** the stripped rivnut® using a scoring tool (e.g., dike or chisel) in several locations (e.g., three) around the upper flange of the rivnut®.

2. **CRIMP** the scored rivnut®.

[c] **FORCE** the rivnut® into the SWB sealing surface channel.

[d] **INSTALL** a new rivnut® using a Rivet Installation Header Tool or equivalent.

[D] **TAP** and **CLEAN** rivnut® threads, as necessary, by running a 1/2-in. 13 UNC thread tap through the rivnut®.

[7] **OBTAIN** a new SWB lid gasket.

[8] **INSPECT** the SWB lid gasket for the following and **DOCUMENT** the results of the inspection on Attachment 2:
- Damage that would prevent the gasket from sealing
- SWB lid gasket expiration date

[9] **IF** the SWB lid gasket has exceeded the expiration date indicated on the SWB lid gasket packaging,
OR the SWB lid gasket is damaged,
THEN GO to Step 6.[7].

6. INSTRUCTIONS—SWB CLOSURE (continued)

WARNING

At no time is any individual permitted to place any portion of the body under a suspended load in order to prevent personnel injury.

[10] **WIPE** the gasket sealing surface of the SWB body and lid to remove loose debris.

WARNING

Due to irritant and skin absorption hazard, nitrile gloves SHALL be worn when applying handling or applying adhesive remover.

CAUTION

Do <u>not</u> use acetone or other strong solvent, as paint/coating removal can occur.

[11] **APPLY** a light coat of low-intensity cleaning solvent to the SWB body flange, such as Fantastik®.

NOTE 1 *The gasket is supplied with the SWB or a vendor replacement kit as four parts (two curved parts and two straight parts). The holes in the gasket are pre-punched for installation on the body.*

NOTE 2 *Steps 6.[12] through 6.[18] may be performed repeatedly for each piece of gasket material.*

[12] **ENSURE** that the gasket holes match the SWB body holes, and that the mitered ends fit together properly before the installation.

[13] **REMOVE** the protective tape from the pressure-sensitive adhesive back of the gasket.

[14] **PLACE** each piece of the gasket assembly (adhesive-side down) on the corresponding SWB body frame location.

[15] **ENSURE** that the mitered gasket ends are interlocked.

6. INSTRUCTIONS—SWB CLOSURE (continued)

[16] **PERFORM** minor adjustments to the gasket, as necessary, by trimming excess material.

[17] **IF** a gasket's gap exceeds 1/4 in.,
THEN:

[A] **DISCARD** the old SWB gasket.

[B] **GO** to Step 6.[7].

WARNING

Due to skin allergen hazard, nitrile, pylox, or trionic gloves SHALL be worn when applying Loctite®.

[18] **FILL** gasket gaps (less than or equal to 1/4 in. wide) using an RTV silicone gasket maker, such as Loctite® 598.

[19] **ENSURE** that the appropriate rigging equipment 1/4-20 UNC-2A X .29-in. long swivel hoist ring or two 6 in. x 9 in magnetic assemblies (150 lb capacity for a 1/8 in. thick lid) has been attached to the SWB lid.

[20] **IF** a 1/4-20 UNC-2A X .29-in. long swivel hoist ring was installed,
THEN ENSURE that the 1/4-20 UNC-2A X .29-in. long swivel hoist ring has been torqued to approximately 6 ft-lb (72 in-lb) ensuring that full thread engagement is achieved.

[21] **IF** installing the SWB lid with a forklift,
THEN:

[A] **ENSURE** that a 2 in. x 4 ft sling or equivalent (capacity greater than or equal to 3,200 lb) has been rigged to the magnetic assemblies or appropriate rigging equipment (e.g., swivel hoist ring), as required.

[B] **ENSURE** that a spreader bar is properly placed and secured on the forklift.

[C] **SECURE** the slings to the hook on the bottom of the spreader bar.

[D] **GO** to Step 6.[23].

6. INSTRUCTIONS—SWB CLOSURE (continued)

[22] **ENSURE** that the gantry crane hook or sling is attached to the SWB lid rigging equipment (e.g., swivel hoist ring).

[23] **SLOWLY LIFT** the SWB lid and **MOVE** the SWB lid to the SWB or roll the SWB under the lid as applicable.

[24] **CENTER** the SWB lid over the SWB body shell flange.

WARNING

Pinch points will be present between the lid and the body shell flange. Keep hands and fingers clear during lid installation to prevent injury.

[25] **SLOWLY LOWER** the SWB lid onto the SWB body shell flange ensuring that the gasket is not damaged during the lowering of the SWB lid.

NOTE *The following step may be performed out of sequence.*

[26] **REMOVE** the SWB lid lift rigging and swivel hoist ring, as required.

WARNING

Due to skin allergen hazard, nitrile, pylox, or trionic gloves SHALL be worn when applying Loctite®.

NOTE *Steps 6.[27] through 6.[30] may be performed repeatedly for each socket flat head cap screw (*SFHCSs*).*

[27] **APPLY** a thread sealant (e.g., Loctite® 246) to the SFHCSs.

NOTE *The SFHCSs installation pattern illustrated on Appendix 2, Standard Waste Box Closure Socket Flat Head Cap Screw Installation Pattern, may be annotated on the SWB lid to facilitate the installation of the SWB lid. This annotation may be performed out of sequence.*

[28] **INSTALL** and **HAND TIGHTEN** SFHCSs A through D in the order illustrated on Appendix 2.

6. INSTRUCTIONS—SWB CLOSURE (continued)

[29] **INSTALL** and **HAND TIGHTEN** SFHCSs E through L in the order illustrated on Appendix 2.

[30] **INSTALL** all remaining SFHCSs in any order.

[31] **DOCUMENT** the torque wrench information on Attachment 3.

WARNING

Cutting evolutions can produce sharp edges and burrs. Wear leather gloves and safety glasses with side shields when cutting.

NOTE *The following step may be repeated as necessary during the completion of this section.*

[32] **IF** a stripped SFHCS is encountered while the SFHCSs are being torqued,
THEN:

[A] **REMOVE** the SFHCS head (e.g, hacksaw), as necessary.

[B] **REMOVE** the SFHCSs.

[C] **ATTACH** appropriate rigging equipment <u>or</u> two 6 in. x 9 in. magnetic assemblies (150 lb capacity for a 1/8 in. thick lid) to the SWB lid.

[D] **IF** removing the SWB lid with a forklift,
THEN:

[a] **RIG** a 2 in. x 4 ft sling or equivalent (capacity ≥ 3,200 lb) to the magnetic assemblies.

[b] **ENSURE** that a spreader bar is properly attached and secured on the forklift.

[c] **SECURE** the sling to the hook on the bottom of the spreader bar.

[E] **SLOWLY LIFT** and **MOVE** the SWB lid to a safe location.

6. INSTRUCTIONS—SWB CLOSURE (continued)

NOTE *All of the SWB gasket may be removed because the entire SWB gasket is to be replaced during closure.*

[F] **REMOVE** the portion of the SWB gasket around the rivnut® to be repaired, as necessary.

[G] **IF** a portion of the SFHCS is in the rivnut®,
THEN REMOVE the remaining portion of the SFHCS (e.g., channel locks holding the rivnut® and unscrew the SFHCS) or **CUT** (e.g., hacksaw) the rivnut® flush with the SWB sealing surface.

[H] **IF** a portion of the rivnut® shoulder remains above the SWB sealing surface, **THEN:**

[a] **SCORE** the stripped rivnut® using a scoring tool (e.g., dike or chisel) in several locations (e.g., three) around the upper flange of the rivnut®.

[b] **CRIMP** the scored rivnut®.

[I] **FORCE** the rivnut® into the SWB sealing surface channel.

[J] **INSTALL** a new rivnut® using a Rivet Installation Header Tool or equivalent.

[K] **ENSURE** that the SWB lid gasket has been removed by stripping the SWB lid gasket from the SWB body flange.

WARNING

Cutting tools are very sharp and cut resistant gloves (e..g, leather gloves) are to be worn when using/handling cutting tools to prevent severe personnel injury.

[L] **ENSURE** that any residual gasket components or adhesive has been removed, using a flexible spatula, putty knife, or similar tool.

6. INSTRUCTIONS—SWB CLOSURE (continued)

WARNING

Due to irritant and skin absorption hazard, nitrile gloves SHALL be worn when applying handling or applying adhesive remover.

CAUTION

Do not use acetone or other strong solvent, as paint/coating removal can occur.

[M] **APPLY** a light coat of low-intensity cleaning solvent to the SWB body flange, such as Fantastik®.

[N] **INSTALL** a new SWB gasket, and **RECORD** the SWB gasket expiration date in the Comments section of Attachment 3.

[O] **GO** to Step 6.[22].

[33] **TORQUE** all SFHCSs to 30 ft-lb (30 to 40 ft-lb), in accordance with the sequence outlined on Appendix 2, and **DOCUMENT** torque values on Attachment 3.

[34] **TORQUE** all SFHCSs to 50 ft-lb (50 to 60 ft-lb) in accordance with the sequence outlined on Appendix 2, and **DOCUMENT** the torque value on Attachment 3.

NOTE *The following step may performed be out of sequence or concurrently with other actions.*

[35] **CLEAN** the entire box with Fantastik® cleaner or equivalent.

NOTE *The following steps may be performed out of sequence.*

[36] **WEIGH** and **RECORD** the SWB Gross Weight (lb) on Attachment 3.

[37] **RECORD** the SWB Gross Weight (lb) on the SWB lid in approximately 1/2 in. lettering using a permanent marker, and **CHECK** (√) SAT or UNSAT on Attachment 3.

6. INSTRUCTIONS—SWB CLOSURE (continued)

[38] **ENSURE** that the SWB has been labeled in accordance with EP-DIV-DOP-20043, LTP TRU Waste Container Labeling, as required.

[39] **ENSURE** that a TWSR has been initiated in WCATS.

[40] **REQUEST** an RCT perform a radiological survey of the SWB, as required.

[41] **ATTACH** the original Attachment 3 to the SWB <u>or</u> **ENSURE** that Attachment 3 is forwarded to the applicable supervisor.

[42] **IF** containers/items or package were loaded into an SWB,
AND a new TWSR was **NOT** generated,
THEN ENSURE that a TRU Waste Storage Record Change Form (Form 2177) is initiated or **UPLOAD** the information into WCATS.

NOTE *The following step may be performed out of sequence.*

[43] **ENSURE** that the RECEIVING CONTAINER information (e.g., container closure date, time, and other requested information) has been updated in the WCATS desktop application.

7. POST-PERFORMANCE ACTIVITY

NOTE *Completing a Post-Job Review may be accomplished using the applicable P300 form or online (the preferred method since the institution has access to feedback and lessons learned* http://int.lanl.gov/safety/iwmc/ *[Click on the Submit IWD Part 4 Post-Job Review]).*

7.1 Disposition

Waste Handling Operator

[1] **SIGN** and **DATE** the applicable attachments.

[2] **FORWARD** the applicable attachments to the Shift Operations Supervisor (SOS) or designee.

Supervisor

[3] **REVIEW** the applicable attachments for accuracy and completeness.

[4] **IF** any discrepancies are identified with the attachments,
THEN working with the original surveillant correct the documentation.

[5] **IF** any deficiencies were identified,
THEN INITIATE actions to correct the deficiency [e.g., Facility Service Request (FSR) System], and **DOCUMENT** the actions taken (e.g., FSR Issue Number) in the Comments section of the applicable appendices.

[6] **SIGN** and **DATE** the applicable attachments.

7.1 Disposition (continued)

Supervisor or designee

[7] **IF** this procedure is categorized as a moderate or high/complex activity and any of the following occur:

- An activity was completed for the first time
- A request was made by anyone involved with the performance of this procedure to perform a post-job review
- An abnormal event occurred
- A revision to an existing procedure was issued and it has been determined by the procedure owner or designee that a Post-Job Review is required

THEN PERFORM a formal Post Job Review (PJR) in accordance with P300.

[8] **IF** the Post-Job Review identified any necessary changes to this procedure,
THEN INITIATE a revision to this procedure.

7.2 Records Processing

Supervisor or designee

[1] **ENSURE** that documents generated by the performance of this procedure are processed as follows:

Record Identification	Record Type Determination	Protection/Storage Methods	Processing Instructions
Attachment 1, WCRRF Standard Waste Box (SWB) Preparation Data Sheet Attachment 2, WCRRF Standard Waste Box (SWB) Closure Data Sheet	QA Record	Supervision **SHALL** implement a reasonable level of protection to prevent loss and degradation. Records should be maintained in a one-hour fire rated metal file cabinet when not in use.	When the records are ready for final disposition, the record is transferred to Records Management in accordance with EP-DIR-AP-10003, Records Management Procedure for ADEP Employees.

8. REFERENCES

DOE/WIPP 11-3384, CBFO Approved Filter Vents

EP-DIR-AP-10003, Records Management Procedure for ADEP Employees

EP-DIV-AP-0112, EWMO Pre-Job Briefings

EP-DIV-DOP-20043, LTP TRU Waste Container Labeling

EP-DIV-DOP-20086, EWMO Division Specific Forklift and Drum Handler Equipment Operations

EP-WCRR-WO-DOP-1197, WCRRF Loading/Unloading SWB or 85-Gal Drum

P101-18, Procedure for Pause/Stop Work

P101-25, Cranes, Hoists, Lifting Devices, and Rigging Equipment

P121, Radiation Protection

P300, Integrated Work Management

P330-6, Nonconformance Reporting

APPENDIX 1
Page 1 of 1

STANDARD WASTE BOX CLOSURE SOCKET
FLAT HEAD CAP SCREW INSTALLATION PATTERN

NOTE 1 *The letters, noted on the SWB lid assembly, represent the sequence for initial installation of the screws. The remaining screws may be installed in any sequence.*

NOTE 2 *The numbers 1 through 42 represent a crisscross pattern by which the screws* ***SHALL*** *be torqued.*

NOTE 3 *A commercial liquid thread sealant (e.g., Loctite® 246)* ***SHALL*** *be applied to all screws before installation.*

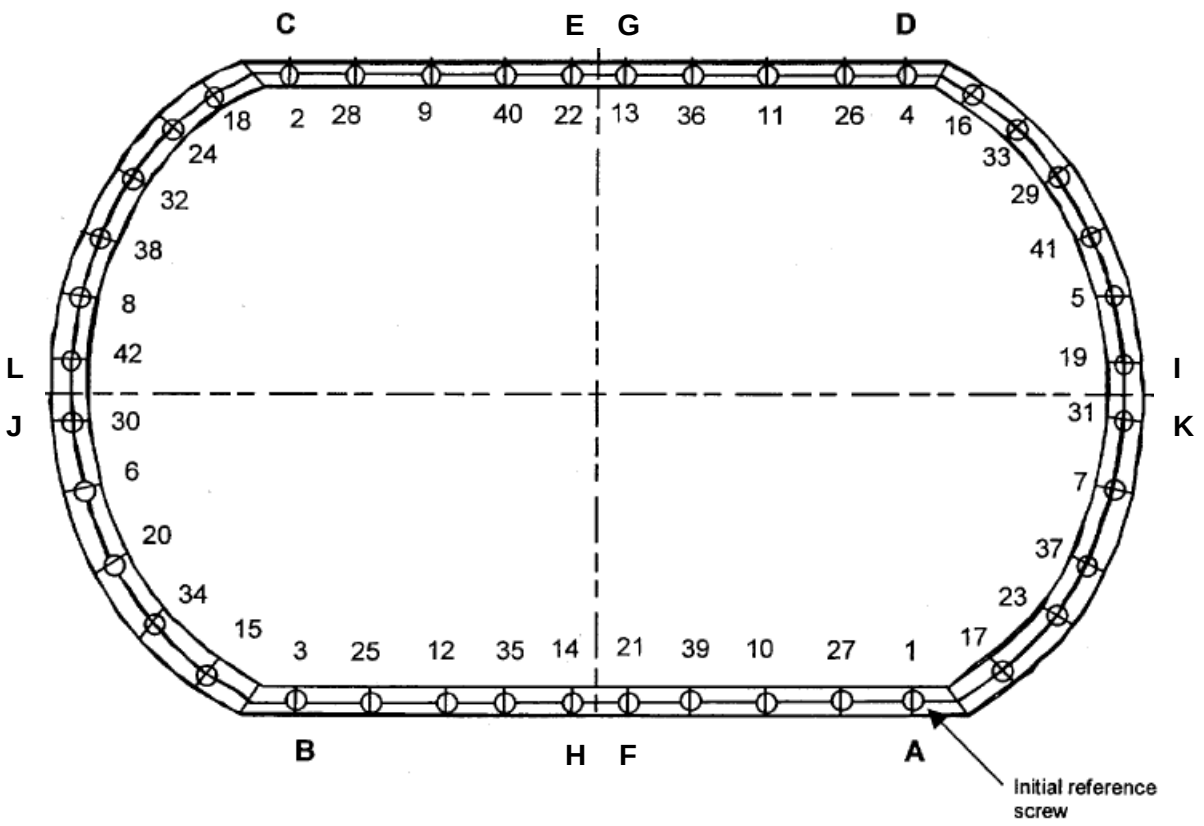

APPENDIX 2
Page 1 of 1
NUCLEAR FILTER TECHNOLOGY FILTERED VENT SEALS

Figure 3-1, Skolnik Rieke VG1 3/4 in. Bung Base and Flat, Neoprene Seal

Figure 3-2, Skolnik Rieke VG2 3/4 in. Bung Base and O-ring Seal

ATTACHMENT 1
Page 1 of 1

WCRRF STANDARD WASTE BOX (SWB) PREPARATION DATA SHEET

5.[19] SWB serial number: _____

5.[30] Torque wrench information:
- M&TE No.: _____
- Cal. Expiration Date: _____
- Tolerance: _____

- Torque wrench listed above is within the acceptable ranges as displayed on the calibration certificate. ☐ YES ☐ NO

Performed By: _____ / _____ / _____ / _____
Operator (print) Signature Z # Date

IPC-1

5.[31] Filtered Vent 1 torque value [180 in-lb (156 to 204 in-lb)]: _____ in-lb

Filtered Vent 2 torque value [180 in-lb (156 to 204 in-lb)]: _____ in-lb

5.[32] WIPP-approved filtered vent information:

	Filtered Vent 1	Filtered Vent 2
Manufacturer:	_____	_____
Model No.:	_____	_____
Serial No.:	_____	_____
Manufacture Date:	_____	_____

IPC-1

5.[38] Plug 1 torque value 120 in-lb (60 to 180 in-lb): _____ in-lb

Plug 2 torque value 120 in-lb (60 to 180 in-lb): _____ in-lb

Comments: _____

7.1[1] Performed By: _____ / _____ / _____ / _____
Operator (print) Signature Z # Date

7.1[6] Reviewed By: _____ / _____ / _____ / _____
Supervisor or designee (print) Signature Z # Date

ATTACHMENT 2
Page 1 of 1

WCRRF STANDARD WASTE BOX (SWB) CLOSURE DATA SHEET

6.[3] SWB serial number: _____

6.[8] SWB gasket inspection: Capable of sealing: ☐ YES ☐ NO
Expiration Date: _____

6.[31] SWB torque wrench: M&TE No.: _____
Cal. Expiration Date: _____
Tolerance: _____
Torque wrench listed above is within the acceptable ranges as displayed on the calibration certificate. ☐ YES ☐ NO

Performed By: _____ / _____ / _____ / _____
Operator (print) Signature Z # Date

6.[33] SFHCS first torque value 30 ft-lb (30 to 40 ft-lb): _____ ft-lb

6.[34] SFHCS second torque value 50 ft-lb (50 to 60 ft-lb): _____ ft-lb

6.[36] SWB Gross Weight (lb): _____ lb

6.[37] SWB Gross Wt. recorded on SWB lid in 1/2 in. lettering: ☐ SAT ☐ UNSAT

Comments: _____

7.1[1] Performed By: _____ / _____ / _____ / _____
Operator (print) Signature Z # Date

Performed By: _____ / _____ / _____ / _____
Operator (print) Signature Z # Date

Performed By: _____ / _____ / _____ / _____
Operator (print) Signature Z # Date

Performed By: _____ / _____ / _____ / _____
Operator (print) Signature Z # Date

7.1[6] Reviewed By: _____ / _____ / _____ / _____
Supervisor or designee (print) Signature Z # Date

EP-WCRR-WO-DOP-1204, WCRRF 55-Gallon Daughter Drum Assembly Preparation and Closure

LAUR-14-24881

WCRRF 55-Gallon Daughter Drum Assembly Preparation and Closure

Effective Date: 4-4-2014

Hazard Class:	☐	Low	☒	Moderate	☐	High/Complex
Usage Mode:	☐	Reference	☐	UET	☒	Both UET and Reference

The Responsible Manager has determined that the following organizations' review/concurrence is required for the initial document, and for major revisions a same type and level review is required. Review documentation is contained in the Document History File:

Engineering
Quality Assurance
Radiation Protection
Industrial Hygiene and Safety
Subject-Matter Expert
Shift Operations Manager

Responsible Manager, LTP-DDP Operations Manager

Name (print)	Z#	Signature	Date
Lou Jalbert	121997	/s/ L Jalbert	4-2-2014

Classification Review: ☐ N/A ☒ Unclassified ☐ UCNI ☐ Classified _____

Name (print)	Z#	Signature	Date
Teri Tingey	200975	//s/ T Tingey	4-2-2014

Working Copy / Information Only (circle one)
Initials / Date: _____/_____

This document fully satisfies the requirements of P300, Integrated Work Management, in order to systematically describe the work activity, the associated hazards, and the controls that **MUST** be employed to mitigate the risks.

REVISION HISTORY

Document Number	Issue Date	Action	Description
EP-WCRR-WO-DOP-0221, R.0	May 2007	New Document	
EP-WCRR-WO-DOP-0221, R.1	September 2007	Minor Revision	Eliminated use of 90 Mil Rigid liners and substituted with cardboard liners.
EP-WCRR-WO-DOP-0221, R.2	September 2007	Minor Revision	Inserted use of plastic 90 Mil Rigid liners or cardboard liners.
EP-WCRR-WO-DOP-0221, R.3	September 2007	Minor Revision	Section 8.1.3.5 included plastic liner. Section 8.1.5.1 on attachment deleted attachment 2 and 3 and revised to reflect 1 and 5.
EP-WCRR-WO-DOP-0221, R.4	September 2007	Minor Revision	Incorporated previous IPCs. Made editorial changes and re-arranged attachment 2.
EP-WCRR-WO-DOP-0221, R.5	November 2007	Major Revision	Revised to reference new Waste Container Traveler (EP-WCRR-WO-DOP-0299). Traveler will be used to document critical data and sign-offs.
EP-WCRR-WO-DOP-0221, R.6	January 30, 2009	Major Revision	Revised to add additional steps for drum ring closure and torque specifications and documentation/checklist.
EP-WCRR-WO-DOP-0221, R.7	February 18, 2009	Minor Revision	Revised Attachment 1 for torque wrench documentation information.
EP-WCRR-WO-DOP-0221, R.8	September 3, 2013	Major Revision	Revise procedure to incorporate steps for WCATS implementation and make editorial corrections (e.g., change title and reformat) as necessary. This revision is a total rewrite and revision bars have been omitted.
EP-WCRR-WO-DOP-0221, R.9	November 8, 2013	Minor Revision	Revise procedure to add “in-lb” measurement for torque wrench information in Attachments 1 and 2 and change bung plug torque value to “ft-lb.” Added “(+/-)” to tolerance entries on Attachments 1 and 2. No new hazards have been introduced in this revision.

REVISION HISTORY (continued)

Document Number	Issue Date	Action	Description
EP-WCRR-WO-DOP-1204, R.0	April 4, 2014	Minor	Revised Step 5.[32] to prepped empty container. Added documentation line times for labels. and radiological survey to Attachment 2. New number assigned. No hazards introduced during this revision. Rev bars in the left column display locations of changes.

TABLE OF CONTENTS

Section Page

TITLE PAGE 1
REVISION HISTORY 2
TABLE OF CONTENTS 8

1. PURPOSE 5

2. SCOPE 5

3. PRECAUTIONS AND LIMITATIONS 5

4. PREREQUISITE ACTIONS 9
4.1 Planning and Coordination 9
4.2 Special Tools and Equipment, Parts, and Supplies 10
4.2.1 Measuring and Test Equipment (M&TE) 10
4.2.2 Special Tools and Equipment 11
4.2.3 Consumables 11

5. PERFORMANCE—55-GAL DRUM PREPARATION 12

6. PERFORMANCE—55-GAL DRUM CLOSURE 19

7. POST-PERFORMANCE ACTIVITY 25
7.1 Disposition 25
7.2 Records Processing 26

8. REFERENCES 26

Appendices
Appendix 1, Nuclear Filter Technology Filtered Vent Seals 27

Attachments
Attachment 1, WCRRF Drum Preparation Data Sheet 28
Attachment 2, WCRRF Drum Closure Data Sheet 30

1. PURPOSE

This procedure provides detailed instructions for preparing and closing transuranic (TRU) 55-gallon drum assemblies at the Waste Characterization, Reduction, and Repackaging Facility (WCRRF).

2. SCOPE

This procedure applies to all personnel who supervise or perform drum preparation and closure activities at WCRRF.

This procedure is performed in conjunction with the Waste Compliance and Tracking System (WCATS) mobile device for performing the TRU DRUM PREPARATION task and the WCATS desktop application to update drum information following the closure of a 55-gal drum.

3. PRECAUTIONS AND LIMITATIONS

- Handling of TRU waste containers using industrial forklifts or cranes present several hazards; including container breech, dropped containers, obstructed areas, inclines, uneven surfaces, and pedestrians. Operators **SHALL** comply with the safe operating practices for use of powered industrial trucks and safety basis requirements for the safe handling of TRU waste containers. Adhere to the requirements of EP-DIV-DOP-20086 EWMO Division Specific Forklift and Drum Handler Equipment Operations.

- When a worker observes an unsafe condition or act that may pose an imminent danger or other safety concern/hazard, the worker has the authority and responsibility to inform the worker engaged in the work and request that the work activity be paused and/or stopped based on the risk posed to the individual, the employees, the environment, or the facility in accordance with P101-18, Procedure for Pause/Stop Work.

- Activities, items, and containers **SHALL** satisfy approved design specifications, regulatory requirements, process-specific parameters, and procedural requirements. Activities, items, or containers that do <u>not</u> conform to the approved specifications and requirements are considered nonconforming and Nonconformance Reports (NCRs) **SHALL** be generated in accordance with P330-6, Nonconformance Reporting, as required.

3. PRECAUTIONS AND LIMITATIONS (continued)

- Forklift operators must exercise extreme caution to ensure personnel are away from the immediate vicinity of forklift operations, and utilize spotters for all high lifts to prevent injury to personnel, equipment and material damage from industrial equipment use and falling objects.

- When using a pry bar to reposition container that is within another container in order to allow access, ensure that the pry bar is securely positioned (e.g., wedged) and that both feet are firmly placed on a non-slip surface to prevent personnel injury due to the sudden movement of the pry bar or loss of footage.

- Do not disturb or touch wild animals, dead animals, nesting areas, droppings, or surfaces with mold growth to avoid exposure to biological threats (e.g., snakes, rodents, rodent droppings, Hanta virus, Bubonic plague, spiders, West Nile virus, molds) and notify the WCRRF Operations Center of the situation.

- To comply with the intent of the ALARA Program, all personnel **SHALL** apply the principles of time, distance, and shielding when working with radiological materials.

- Only trained and qualified personnel may cross the “cone of safety” demarcation while a load is suspended.

- Personnel **SHALL** use the appropriate drum handling equipment when moving drums or when removing or applying drum closure rings.

- Any manual movements of 55-gal and larger drums, whether empty or containing waste, without mechanical assistance, **SHALL** only be performed as a last resort and with written (e.g., email or memorandum) approval from one of the following individuals:
  — Program Director or Deputy
  — EWMO-FOD or Deputy
  — Project Manager

  Written approval **SHALL** contain a description of the activity to be performed and the non-mechanically assisted method approved to be used. A copy of the written approval **SHALL** be maintained in the WCRRF Operations Center.

- Avoid slips, trips, and falls by wearing the proper footwear with slip-resistant soles and using handrails when using stairs. Use established pathways when available and avoid walking on uneven or unstable surfaces.

3. PRECAUTIONS AND LIMITATIONS (continued)

- Drums and associated equipment (i.e., closure rings, fasteners, etc.) can have sharp or rough edges. Wear appropriate PPE when handling drums. Keep fingers and hands clear of pinch points during drum movements.

- High temperature and humidity; use of respirators and impermeable or multilayered work clothing; limited air movement; physical exertion; poor physical condition; some medications; and inadequate tolerance for hot workplaces may result in heat stress. In order to reduce the potential of heat stress the following activities should be practiced:
  - Allow sufficient time for proper acclimatization to heat
  - Increase fluid and electrolyte intake before and after work
  - Use an Environment, Safety, and Health (ES&H) approved work/rest regimen
  - Recognize the early symptoms of heat stress
  - Consider heat stress when selecting personal protective equipment
  - Utilize a Wet Bulb Globe Temperature (WBGT) when deemed necessary by IHS staff

- Personnel can determine the drum manufacturer (e.g., Myers or Skolnik) by the UN marking. The following are two examples of UN markings and the explanation of the markings:
  - Myers 1A2/X430/S/09/USA/M020 or MXXX
  - Skolnik 1A2/Y1.5/175/09/USA/SDCC

  1. *1A2 – 1 indicates it is a drum, A is a steel drum, and 2 means it has an open top (lid)*
  2. *X430 – X indicates the drum is designed to contain any hazard level material (Packaging Group I, II, or III) up to and including high hazard level material and the 430 indicates maximum gross weight in kilograms (430 Kg = 946 lb) [Y indicates up to and including medium hazard level material and 1.5 indicates the packaged material density or specific gravity]*
  3. *S – Drum contents is a solid or there is an inner package (175 is the hydraulic pressure in kilo-pascal)*
  4. *09 – Year manufactured*
  5. *USA – country where manufactured*
  6. *MXXX or SDCC – Manufacturer's code [Skolnik is SDCC and Myers will begin with an M (e.g., M020)]*

- Hazardous waste containers with liquids (any amount or configuration) that have <u>not</u> been solidified (absorbed) **SHALL** be managed on secondary containment pallets.

3. PRECAUTIONS AND LIMITATIONS (continued)

- The most current list of Waste Isolation Pilot Plant (WIPP)-approved filtered vents are listed on DOE/WIPP 11-3384, CBFO Approved Filter Vents.

- Not Applicable (N/A) is documented on the attachments during the performance of this procedure indicating information that is not required to be recorded.

- This procedure contains special procedure step markings. **($)** is used to identify steps that implement WCRRF Safety Basis requirements. Steps containing **($)** may not be changed without Engineering approval to ensure the safety envelope is maintained.

- **($)** TRU WASTE CONTAINERS **SHALL** be equipped with a WIPP-approved filtered vent and the vent **SHALL** be free of obvious obstructions. [SAC 5.10.2.3(3)]

- Radiological surveys for personnel and equipment may be performed at any time during the performance of this procedure as deemed necessary by Radiation Protection (RP).

- The Class 2 laser scanning head on the WCATS mobile device can cause eye injury if eye is exposed to the beam. Do not allow eyes of user or observers to become exposed to laser beam.

- The WCATS mobile device contains a lithium-ion battery. Exposure to extreme temperatures (greater than 140 °F) may cause battery to explode. Do not store the WCATS mobile device where temperatures may exceed 140 °F. Keep mobile device out of direct sunlight for extended periods of time when not in use. Do not incinerate, mutilate, short circuit, or disassemble the battery pack. Do not dispose of in municipal waste receptacles. Dispose of in properly marked universal waste disposal areas.

- If the entire WCATS should become inoperable, before performing MAR related activity the operator notifies their immediate supervisor and contacts the WCRRF Operations Center for guidance and direction.

- WCATS mobile device applications may be performed on the WCATS desktop application.

4. PREREQUISITE ACTIONS

NOTE *The listed Prerequisite Actions may be completed in any order.*

4.1 Planning and Coordination

Supervisor or designee

[1] **ENSURE** that the current revision of this document is available, and **IDENTIFY** this document as Working Copy or Information Only on the Title Page.

[2] **ENSURE** that a pre-evolution briefing is conducted and documented for all personnel involved in the performance of this procedure, in accordance with EP-DIV-AP-0112, EWMO Pre-Job Briefings.

[3] **ENSURE** the performance of this procedure has been properly scheduled on the WCRRF facility schedule.

[4] **ENSURE** that an RWP for the planned activity has been issued.

[5] **ENSURE** that, as a minimum, the following personnel trained to the use of this procedure are available for the performance of this procedure, as required:

- Two Radiological Control Technicians (RCTs)
- Two Waste Handling Operators
- One Person-in-Charge (PIC) (e.g., supervisor)

[6] **ENSURE** that the TRU daughter waste container labels (e.g., Shorty barcode labels) have been obtained from the Waste Help Team (wastehelp@lanl.gov), as necessary.

4.2 Special Tools and Equipment, Parts, and Supplies

4.2.1 Measuring and Test Equipment (M&TE)

NOTE *Torque wrenches are calibrated either as a percentage of full scale or a percentage of indicated value. The torque wrench accuracy information is found on the Calibration Certificate document. Torque wrenches are not calibrated in, nor are they to be used below 20% of their full range.*

Supervisor or designee

[1] **ENSURE** that the following measuring and test equipment is available, as required:

- Torque wrench calibrated to and capable of torquing 0 to 144 in-lb (0 to 12 ft-lb)
- Torque wrench calibrated to and capable of torquing 12 to 75 ft-lb

[2] **IF** a torque wrench has exceeded the calibration due date,
THEN:

[A] **LABEL** or **MARK** the torque wrench as not to be used.

[B] **OBTAIN** another torque wrench that is within the calibration due date.

[C] **NOTIFY** supervision of the discrepancy

4.2.2 Special Tools and Equipment

Supervisor or designee

[1] **ENSURE** that the following special tools and equipment are available, as required:

- 5/16 in. long-arm hex key
- 5/16 in. hex bit socket
- 15/16 in. socket
- 15/16 in. open end or box wrench
- 9/16 in. long-arm hex key
- 9/16 in. hex bit socket
- 9/16 in. socket
- 9/16 in. open end or box wrench
- 1-1/2 in. 6 or 12 point socket for filter installation
- Ratchet drive wrench
- 3/4 in. – 14 NPSM or 3/4 in. – 14 NPT thread tap
- 1/2 in. – 13 UNC thread tap
- WCATS mobile device

4.2.3 Consumables

Supervisor or designee

[1] **ENSURE** that the following consumables are available, as required:

- Absorbent wipes
- 55-gal drum plastic contamination control sleeves or vented bag
- WIPP-approved filtered vents (e.g., NucFil-019DS, NucFil-13, or NucFil-072S)
- Decontamination supplies
- RP-approved tape
- Kimwipes (lint-free wipes)
- Fantastik® cleaner or equivalent
- Thread-locker (e.g., Loctite® 271 or Loctite® 680)
- Thread sealant (e.g., Loctite® 246)
- Lubricating oil (e.g., WD-40)
- RTV silicone gasket maker (e.g., Loctite® 598)
- RTV-732 sealant or equivalent
- Labels (e.g., radioactive and waste container)

5. PERFORMANCE—55-GAL DRUM PREPARATION

This section is a stand-alone section and may be performed independently of, or in conjunction with, other Performance sections.

NOTE 1 *Radiological surveys may be performed as determined necessary [e.g., by an RP representative (e.g., RCT)] any time during the performance of this procedure.*

NOTE 2 *The TRU DRUM PREPARATION task on the WCATS mobile device may be performed in conjunction with the performance of the physical build of a drum*

NOTE 3 *Recording information from Steps 5.[3] and Step 5.[17] on Attachment 1 may be performed out of sequence or anytime during the 55-gal drum preparation.*

Supervisor or Waste Handling Operator

[1] **ENSURE** that the prerequisite actions are completed.

Waste Handling Operator

[2] **OBTAIN** a DOT Type 7A certified drum and lid assembly.

[3] **RECORD** the following drum information on Attachment 1, WCRRF Drum Preparation Data Sheet.

- Purchase Order Number
- Lot Number
- Manufacture Date

NOTE *Self-tapping filtered vents may be retained for later reinstallation.*

[4] **ENSURE** that the 3/4 in. bung or existing filtered vent has been removed from the drum lid, and **DISCARD** the filtered vent.

[5] **ENSURE** that the drum lid has been removed.

5. PERFORMANCE—55-GAL DRUM PREPARATION (continued)

[6] **ENSURE** that the drum, lid, gasket, closure ring, bolt and nut, chine, rolling hoops, and paint have been inspected for holes or other damage that may impact the integrity of the drum using the following criteria:

- No obvious signs of degradation (i.e., no clearly visible and potentially significant defects)
- No evidence that container has been, pressurized (i.e., no expansion of sidewalls, bottom, or top, and no warping)
- No potentially significant rust or corrosion such that wall thinning, pinholes, or breaches are likely or load bearing capacity is suspect (i.e., no caked layers or deposits of rust and no rust present in the form of deep metal flaking or built-up areas of corrosion products)
- No split seams, tears, obvious holes, punctures (of any size), creases, broken welds or cracks (i.e., no obvious leaks, holes or openings, cracks, deep crevices, creases, tears, broken welds, sharp edges or pits, are either breached or on the verge of being breached)
- No fastener or locking ring damage or excessive corrosion
- No dents, scrapes, or scratches that make container's structural integrity questionable or prevent top and bottom surfaces from being parallel (i.e., no deep gouges, scratches, or abrasions over wide areas, top and bottom surfaces <u>not</u> parallel, or large-deep dents)
- No discoloration indicating leakage or other evidence of leakage from container (i.e., no evidence of leakage at penetrations, welds, seams, or intersections of one or more metal sheets or plates)
- Container is <u>not</u> bulged (i.e., no expansion of sidewalls, bottom, or top, no protrusion of the side wall beyond a line connecting the peaks of the surrounding rolling hoops or bottom/top ring, or no deformation of the rolling hoop)

[7] **IF** the drum or drum components fail the visual inspection,
THEN:

[A] **IDENTIFY** (e.g., tag or mark) the failed item to indicate that the item is defective.

[B] **SEGREGATE** defective item to prevent re-use.

[C] **NOTIFY** supervision of the discrepancy.

5. PERFORMANCE—55-GAL DRUM PREPARATION (continued)

NOTE 1 *A Quality Assurance (QA) representative may be contacted for assistance with the NCR process.*

NOTE 2 *The NCR may be initiated at an operationally convenient time.*

Supervisor

[D] **ENSURE** that an NCR is initiated in accordance with P330-6, as required.

Waste Handling Operator

[E] **GO** to Step 5.[2].

[8] **PLACE** 2-in. duct tape on the vertical seam on the interior of the drum.

[9] **OBTAIN** a drum liner bag and filter assembly.

[10] **PLACE** yellow vinyl tape with smear centered on tape over filter.

[11] **FILL** the drum liner bag with air from a compressed air source.

[12] **INSPECT** the liner bag for damage, cuts, or leaks by looking, listening, and feeling.

[13] **IF** the liner bag is damaged,
THEN REJECT the damaged liner bag and **GO** to Step 5.[9].

[14] **STRETCH** the liner bag's bungee cord.

[15] **INSPECT** bungee cord.

[16] **IF** the bungee cord is broken or damaged,
THEN REJECT the bag and **GO** to Step 5.[9].

[17] **RECORD** the following liner bag filter information on Attachment 1:
- Manufacturer
- Model Number
- Serial Number
- Manufacture Date

5. PERFORMANCE—55-GAL DRUM PREPARATION (continued)

[18] **ENSURE** that the drum is prepared with a 90 mil plastic liner or cardboard liner, drum liner bag, and filter assembly as follows:

[A] **INSPECT** cardboard liner/plastic liner to ensure that the exterior surfaces are smooth.

[B] **PLACE** cardboard liner/plastic liner into drum liner and bag assembly.

[C] **LINE** up filter with the drum seam.

[D] **PLACE** the liner, bag, and filter assembly into the drum.

[E] **ROLL** excess liner bag into cardboard liner/plastic liner.

[19] **ENSURE** that the torque wrenches to be used are calibrated, and **DOCUMENT** the following on Attachment 1:

- M&TE identification number
- Calibration expiration date
- Torque wrenches range specified on the Calibration Certificate
- Tolerance (+/-)

[20] **CHECK** (✓) YES or NO on Attachment 1 to indicate whether the torque value is within the calibrated range of the torque wrench, and **PRINT** name and Z number, **SIGN**, and **DATE** on Attachment 1.

[21] **IF** NO was checked (✓) in the previous step,
THEN NOTIFY supervision that the torque value is <u>not</u> within the calibrated range of the torque wrench, and **REQUEST** further direction.

NOTE *Appendix 1, Nuclear Filter Technology Filtered Vent Seals, illustrates the Skolnik drum Rieke VG1 and VG2 filter configuration.*

[22] **ENSURE** that a WIPP-approved filtered vent to be installed in the drum is equipped with the appropriate seal (gasket or O-ring) as follows:

- Skolnik drum with a Rieke VG1 3/4 in. bung base – Flat, Neoprene Seal
- Skolnik drum with a Rieke VG2 3/4 in. bung base – O-ring Seal

5. PERFORMANCE—55-GAL DRUM PREPARATION (continued)

[23] **RECORD** the following WIPP-approved filtered vent information on Attachment 1:

- Manufacturer
- Model Number
- Serial Number
- Manufacture Date

WARNING

Due to skin allergen hazard, nitrile, pylox, or trionic gloves SHALL be worn when applying Loctite®.

[24] **APPLY** a thread-locker (e.g., Loctite® 271 or Loctite® 680) to the first three threads of a WIPP-approved filtered vent.

[25] **HAND SCREW** the WIPP-approved filtered vent into the 3/4 in. bung hole.

[26] **TORQUE** the WIPP-approved filtered vent to a nominal value of 120 in-lb (96 to 144 in-lb), and **DOCUMENT** the WIPP-approved filtered vent torque value on Attachment 1.

[27] **IF** stripped WIPP-approved filtered vent threads are encountered,
THEN:

[A] **ENSURE** that the drum lid has been removed.

[B] **IDENTIFY** (e.g., tag or mark) the drum lid indicating that the drum lid is defective.

[C] **SEGREGATE** the drum lid to prevent reuse.

[D] **NOTIFY** supervision of the discrepancy.

NOTE 1 *A QA representative may be contacted for assistance with the NCR process.*

NOTE 2 *The NCR may be initiated at an operationally convenient time.*

Supervisor

[E] **ENSURE** that an NCR is initiated in accordance with P330-6, as required.

5. PERFORMANCE—55-GAL DRUM PREPARATION (continued)

Waste Handling Operator

[F] **OBTAIN** a new drum lid.

[G] **GO** to Step 5[2].

[28] **PLACE** the drum lid and drum closure ring on the drum, and **TIGHTEN** the closure ring bolt sufficiently to hold the drum lid in place.

[29] **IF** the drum lid is equipped with a 2-inch bung,
THEN:

[A] **LOOSEN** and **HAND-TIGHTEN** the 2-inch bung.

[B] **TORQUE** the 2-inch bung in accordance with Table 1, 2-in. Bung Torque Specifications, and **DOCUMENT** the torque value on Attachment 1.

TABLE 1, 2-in. BUNG TORQUE SPECIFICATIONS

Myers									
	Type I – Tri-Sure Octagon Base, Round Head Plug inserted in Tri-Sure Flange						Type II – Rieke Serrated Base, Hexagon Head Plug		
Plug Mat'l	Steel	Steel	Poly	Poly	Poly/Nylon	Poly/Nylon	Steel	Steel	Nylon
Gasket Mat'l	Buna-N and EPDM	Poly	None (Integral)	Buna-N and EPDM	Poly	Buna-N and EPDM	Buna-N and EPT	Poly	Poly and EPT
2 in.	20 ft-lb	30 ft-lb	12 ft-lb	15 ft-lb	30 ft-lb	20 ft-lb	30 ft-lb	40 ft-lb	20 ft-lb

Skolnik							
Plug Type	Tri-Sure			Rieke (plastic)	Rieke (steel)		Nuc-Fil Filters
Gasket Mat'l	Buna	Poly or Teflon	PE/PP (composite drums)	—	Poly	All others	
2 in.	20 ft-lb	30 ft-lb	10 ft-lb	20 ft-lb	40 ft-lb	30 ft-lb	—

[30] **RECORD** the File ID number of the scale on Attachment 1.

[31] **VERIFY** that the scale is within the calibration frequency, and **CHECK** (✓) SAT or UNSAT on Attachment 1.

5. PERFORMANCE—55-GAL DRUM PREPARATION (continued)

NOTE *For Steps 5.[32] and 5.[33] an empty prepped container is defined as a container that is empty and prepared with the inner components (e.g., liners, POC, Cardboard, filter) and contains no waste.*

[32] **IF** weight of empty prep must be verified,
THEN WEIGH the empty prepared container and **DOCUMENT** the empty prepared container weight on Attachment 1, as applicable.

[33] **RECORD** the empty prepped container weight of the drum on the drum lid using a permanent marker.

NOTE 1 *The TRU DRUM PREPARATION task on the WCATS mobile device may be performed out of sequence.*

NOTE 2 *Step 5.[34] may be performed at a later time when the prepared drum is to be loaded.*

[34] **IF** the prepared drum is to be labeled,
THEN:

[A] **ENSURE** that a TRU DRUM PREPARATION task has been completed for the drum using a WCATS mobile device.

[B] **ATTACH** one drum identification (ID) barcode label (Shorty label) to the left of the drum seam approximately 6 in. from the drum bottom.

[C] **ATTACH** one drum ID barcode label (Shorty label) to the center of the drum lid.

[D] **ATTACH** three drum ID barcode labels (Shorty labels) approximately 6 in. from the bottom of the drum, one immediately adjacent to the drum seam and the other two approximately 120° apart.

[E] **RECORD** drum ID number at the top of each page of Attachment 1.

[35] **PRINT** name and Z#, **SIGN**, and **DATE** on Attachment 1.

[36] **PLACE** the original Attachment 1 and a blank Attachment 2 into a protective sleeve and **TAPE** to the top of the prepared drum.

6. PERFORMANCE—55-GAL DRUM CLOSURE

This section is a stand-alone section and may be performed independently of, or in conjunction with, other Performance sections.

NOTE *Data may be recorded on Attachment 2, WCRRF Drum Closure Data Sheet, at an operationally convenient time in the performance of this section.*

Supervisor or Waste Handling Operator

[1] **ENSURE** that the prerequisite actions are completed.

Waste Handling Operator

[2] **IF** radiological contamination is detected during evolution,
THEN FOLLOW the direction of the RCT and RWP.

[3] **ENSURE** that a TRU DRUM PREPARATION task has been completed for the overpack drum using a WCATS mobile device, and **RECORD** the drum ID number on each page of Attachment 2.

[4] **ENSURE** that the drum lid is installed on the drum, ensuring that the WIPP-approved bung-filtered vent is directly in-line with the drum seam.

[5] **ENSURE** that the drum lid gasket is properly fitted in the cover groove.

[6] **ENSURE** that the drum closure ring is installed with closure ring lugs facing downward and the closure ring opening positioned directly in-line with the drum seam.

[7] **IF** closing a Skolnik drum,
THEN ENGAGE bolt and nut and **TIGHTEN** the closure ring bolt until the ring opening edges are within approximately 1/2 in. from each other while **TAPPING** around the closure ring with a rubber hammer or dead-blow mallet.

[8] **IF** closing a Myers drum,
THEN ENGAGE bolt and nut and **TIGHTEN** closure ring bolt while **TAPPING** around the closure ring with a rubber hammer or dead-blow mallet.

6. PERFORMANCE—55-GAL DRUM CLOSURE (continued)

[9] **ENSURE** that the torque wrenches to be used are calibrated,
AND DOCUMENT the following on Attachment 2:

- M&TE identification number
- Calibration expiration date
- Torque wrenches range specified on the Calibration Certificate
- Tolerance (+/-)

[10] **CHECK** (✓) YES or NO on Attachment 2 to indicate whether the torque value is within the calibrated range of the torque wrench, and **PRINT** name and Z#, **SIGN**, and **DATE** on Attachment 2.

[11] **IF** NO was checked (✓) in the previous step,
THEN NOTIFY supervision that the torque value is <u>not</u> within the calibrated range of the torque wrench, and **REQUEST** further direction.

[12] **TORQUE** the drum closure ring bolt to the following applicable value while **TAPPING** around the closure ring with a rubber hammer or dead-blow mallet, and **RECORD** the actual torque achieved on Attachment 2.

- Skolnik — 55 to 60 ft-lb
- Myers — Greater than or equal to 60 ft-lb

[13] **POSITION** the jam nut against the drum closure ring bolt-head side of the bolt (unthreaded lug).

[14] **TIGHTEN** jam nut snug against the closure ring unthreaded lug.

[15] **DETERMINE** whether the drum closure ring threaded end is touching the jam nut <u>or</u> the drum closure ring ends are touching, and **CHECK** (✓) SAT or UNSAT the determination on Attachment 2.

[16] **IF** the drum closure ring threaded end is touching the jam nut,
OR the drum closure ring ends are touching,
THEN:

NOTE *The drum closure ring may be removed from the drum to permit the installation of a drum closure ring that will satisfy the manufacturer's requirements.*

[A] **REMOVE** the drum lid.

6. PERFORMANCE—55-GAL DRUM CLOSURE (continued)

[B] **IDENTIFY** (e.g., tag or mark) the drum closure ring indicating that the drum closure ring is defective.

[C] **SEGREGATE** the drum closure ring to prevent reuse.

[D] **NOTIFY** supervision of the discrepancy.

NOTE 1 *A QA representative may be contacted for assistance with the NCR process.*

NOTE 2 *The NCR may be initiated at an operationally convenient time.*

Supervisor

[E] **ENSURE** that an NCR is initiated in accordance with P330-6, as required.

Waste Handling Operator

[F] **OBTAIN** a new drum closure ring.

[G] **GO** to Step 6.[4].

[17] **IF** the drum lid was <u>not</u> prepared in accordance with Section 5 of this procedure, **THEN:**

[A] **RECORD** the 2-inch bung and WIPP-approved filtered vent torque wrench information on Attachment 1.

[B] **CHECK** (✓) YES or NO on Attachment 2 to indicate whether the torque value is within the calibrated range of the torque wrench, and **PRINT** name and Z#, **SIGN**, and **DATE** on Attachment 2.

[C] **TORQUE** the 2-inch bung in accordance with Table 2, 2-in. Bung Torque Specifications, and **DOCUMENT** the torque value on Attachment 2.

6. PERFORMANCE—55-GAL DRUM CLOSURE (continued)

TABLE 2, 2-in. BUNG TORQUE SPECIFICATIONS

Myers									
	Type I – Tri-Sure Octagon Base, Round Head Plug inserted in Tri-Sure Flange						Type II – Rieke Serrated Base, Hexagon Head Plug		
Plug Mat'l	Steel	Steel	Poly	Poly	Poly/Nylon	Poly/Nylon	Steel	Steel	Nylon
Gasket Mat'l	Buna-N and EPDM	Poly	None (Integral)	Buna-N and EPDM	Poly	Buna-N and EPDM	Buna-N and EPT	Poly	Poly and EPT
2 in.	20 ft-lb	30 ft-lb	12 ft-lb	15 ft-lb	30 ft-lb	20 ft-lb	30 ft-lb	40 ft-lb	20 ft-lb

Skolnik							
Plug Type	Tri-Sure			Rieke (plastic)	Rieke (steel)		Nuc-Fil Filters
Gasket Mat'l	Buna	Poly or Teflon	PE/PP (composite drums)	—	Poly	All others	
2 in.	20 ft-lb	30 ft-lb	10 ft-lb	20 ft-lb	40 ft-lb	30 ft-lb	—

[D] **TORQUE** the WIPP-approved filtered vent to a nominal value of 120 in-lb (96 to 144 in-lb), and **DOCUMENT** the WIPP-approved filtered vent torque value on Attachment 2.

NOTE *The drum seam should <u>not</u> be covered with any labels.*

[18] **ENSURE** that three (3) barcode drum ID labels are placed approximately 6 in. from the drum bottom, one immediately adjacent to the drum seam and the other two approximately 120º from the ID label previously placed.

[19] **ENSURE** that one (1) barcode drum ID label is placed to the right of drum seam between the top two rolling hoops.

[20] **ENSURE** that one (1) barcode drum ID label is placed in the center of the drum lid.

[21] **PLACE** one (1) yellow Radioactive Waste label between the top two rolling hoops, and to the left of the waste label.

[22] **PLACE** one (1) yellow Radioactive Waste label in the center of the drum lid.

[23] **PLACE** one (1) blue Non RCRA Regulated Waste label between the top two rolling hoops and to the left of the seam, as applicable.

6. PERFORMANCE—55-GAL DRUM CLOSURE (continued)

[24] **PLACE** one (1) yellow Hazardous Waste label between the top two rolling hoops, left of the drum seam, and **ENSURE** that the EPA waste number and accumulation start dates are documented, as applicable.

[25] **DOCUMENT** the labeling was completed from Steps 6.[18] through 6.[24] on Attachment 2.

Waste Handling Operator

[26] **IF** radiological contamination is detected during the evolution, **THEN FOLLOW** the direction of the RCT and RWP.

[27] **RECORD** the File ID number of the scale on Attachment 2.

[28] **VERIFY** that the scale is within the calibration frequency, and **CHECK** (✓) SAT or UNSAT on Attachment 2.

[29] **WEIGH** the drum, and **RECORD** the drum gross weight on Attachment 2.

[30] **RECORD** the drum gross weight on drum lid in approximately 1/2 in. lettering using a permanent marker, and **CHECK** (✓) SAT or UNSAT on Attachment 2.

NOTE *Steps 6.[29] may be performed out of sequence.*

[31] **ENSURE** that a TWSR has been initiated in WCATS.

[32] **ENSURE** radiological surveys have been completed for the containers before release for movement to a storage area and **DOCUMENT** on Attachment 2.

[33] **PRINT** name and Z#, **SIGN**, and **DATE** on Attachment 2.

[34] **PLACE** the original Attachments 1 and 2 and HMPT tag into a plastic sleeve and **ATTACH** the sleeve to the drum.

6. PERFORMANCE—55-GAL DRUM CLOSURE (continued)

NOTE *The following step may be performed out of sequence.*

[35] **ENSURE** that the RECEIVING CONTAINER information (e.g., container closure date, time, and other requested information) has been updated in the WCATS desktop application.

7. POST-PERFORMANCE ACTIVITY

NOTE *Completing a Post-Job Review may be accomplished using the applicable P300 form or online (the preferred method since the institution has access to feedback and lessons learned* http://int.lanl.gov/safety/iwmc/ *[Click on the Submit IWD Part 4 Post-Job Review]).*

7.1 Disposition

Supervisor

[1] **REVIEW** the applicable attachments for accuracy and completeness.

[2] **IF** any discrepancies are identified with the attachments,
THEN working with the original operator, **CORRECT** the documentation.

[3] **IF** any deficiencies were identified,
THEN INITIATE actions to correct the deficiency [e.g., Facility Service Request (FSR) System], and **DOCUMENT** the actions taken (e.g., FSR Issue Number) in the Comments section of the applicable appendices.

[4] **PRINT** name and Z#, **SIGN**, and **DATE** the applicable attachments.

Supervisor or designee

[5] **IF** this procedure is categorized as a moderate or high/complex activity and any of the following occur:
- An activity was completed for the first time
- A request was made by anyone involved with the performance of this procedure to perform a post-job review
- An abnormal event occurred
- A revision to an existing procedure was issued and it has been determined by the procedure owner or designee that a Post-Job Review is required

THEN PERFORM a formal Post Job Review (PJR) in accordance with P300.

[6] **IF** the Post-Job Review identified any necessary changes to this procedure,
THEN INITIATE a revision to this procedure.

7.2 Records Processing

Supervisor or designee

[1] **ENSURE** that documents generated by the performance of this procedure are processed as follows:

Record Identification	Record Type Determination	Protection/Storage Methods	Processing Instructions
Attachment 1, WCRRF Drum Preparation Data Sheet Attachment 2, WCRRF Drum Closure Data Sheet	QA Record	Supervision **SHALL** implement a reasonable level of protection to prevent loss and degradation. Records should be maintained in a one-hour fire rated metal file cabinet when not in use.	When the records are ready for final disposition, the record is transferred to Records Management in accordance with EP-DIR-AP-10003, Records Management Procedure for ADEP Employees.

8. REFERENCES

DOE/WIPP 11-3384, CBFO Approved Filter Vents

EP-DIR-AP-10003, Records Management Procedure for ADEP Employees

EP-DIV-AP-0112, EWMO Pre-Job Briefings

EP-DIV-DOP-20043, LTP TRU Waste Container Labeling

EP-DIV-DOP-20086, EWMO Division Specific Forklift and Drum Handler Equipment Operations

P101-18, Procedure for Pause/Stop Work

P300, Integrated Work Management

P330-6, Nonconformance Reporting

APPENDIX 1
Page 1 of 1

NUCLEAR FILTER TECHNOLOGY FILTERED VENT SEALS

Figure 3-1, Skolnik Rieke VG1 3/4 in. Bung Base and Flat, Neoprene Seal

Figure 3-2, Skolnik Rieke VG2 3/4 in. Bung Base and O-ring Seal

ATTACHMENT 1
Page 1 of 2

WCRRF DRUM PREPARATION DATA SHEET

5.[34][E] Drum ID No.: _____

5.[3] Drum information:
Purchase Order No.: _____
Lot No.: _____
Manufacture Date: _____

5.[17] Drum Liner Bag/Filter Assembly:
Manufacturer: _____
Model No.: _____
Serial No.: _____
Manufacture Date: _____

5.[19] Filtered vent and 2 in. bung torque wrench information:

	Filtered Vent	2 in. Bung
M&TE No.:	_____	_____
Cal. Expiration Date:	_____	_____
Range:	_____ in-lb	_____ ft-lb
Tolerance (+/-):	_____	_____

5.[20] Torque wrench listed above is within the acceptable ranges as displayed on the calibration certificate. ☐ YES ☐ NO

Performed By: _____ / _____ / _____ / _____
Operator (print) Signature Z # Date

5.[23] Filtered vent information:
Manufacturer: _____
Model No.: _____
Serial No.: _____
Manufacture Date: _____

5.[26] Filtered vent torque value [120 in-lb (96 to 144 in-lb)]: _____ in-lb

5.[29][B] 2 in. bung plug torque value: _____ ft-lb

5.[30] Scale File ID number: _____

ATTACHMENT 1
Page 2 of 2

5.[31] Scale is within the calibration frequency. ☐ SAT ☐ UNSAT

5.[32] Empty prepped container weight (lbs): _____ lbs

5.[34] TRU DRUM preparation has been completed using a WCATS mobile device. _____ Initials

5.[34][E] Drum ID No.: _____

Comments: _____

_____

_____

_____

_____

5.[35] Performed By: _____ / _____ / _____ / _____
Operator (print) Signature Z # Date

7.1[4] Reviewed By: _____ / _____ / _____ / _____
Supervisor or designee (print) Signature Z # Date

ATTACHMENT 2
Page 1 of 2

WCRRF DRUM CLOSURE DATA SHEET

6.[3] Drum ID No.: _____

6.[9] Drum closure ring torque wrench information:

M&TE No.: _____
Cal. Expiration Date: _____
Range: _____ ft-lb
Tolerance (+/-): _____

6.[10] Torque wrench listed above is within the acceptable ranges as displayed on the calibration certificate. ☐ YES ☐ NO

Performed By: _____ / _____ / _____ / _____
Operator (print) Signature Z # Date

6.[12] Drum closure ring torque value: _____ ft-lb

6.[15] Threaded lug of the drum closure ring is <u>not</u> touching the jam nut and the locking ring lugs are <u>not</u> touching. ☐ SAT ☐ UNSAT

6.[17][A] Filtered vent and 2 in. bung <u>torque wrench information</u>: ☐ N/A

	<u>Filtered Vent</u>	<u>2 in. Bung</u>
M&TE No.:	_____	_____
Cal. Expiration Date:	_____	_____
Range:	_____ in-lb	_____ ft-lb
Tolerance (+/-):	_____	_____

6.[17][B] Torque wrench listed above is within the acceptable ranges as displayed on the calibration certificate. ☐ YES ☐ NO ☐ N/A

Performed By: _____ / _____ / _____ / _____
Operator (print) Signature Z # Date

6.[17][C] 2 in. bung plug torque value: _____ ft-lb ☐ N/A

6.[17][D] Filtered vent torque value [120 in-lb (96 to 144 in-lb)]: _____ in-lb ☐ N/A

ATTACHMENT 2
Page 2 of 2

6.[3] Drum ID No.: _____

6.[25] Labels placed on container as directed from Steps 6.18 through 6.[24] _____ Initials / Z#

6.[27] Scale File ID number: _____

6.[28] Scale is within the calibration frequency. ☐ SAT ☐ UNSAT

6.[29] Drum gross weight: _____ lbs

6.[30] Drum gross weight recorded on drum lid in approximately 1/2 in. lettering: ☐ SAT ☐ UNSAT

6.[32] Radiological surveys completed _____ Initials / Z#

Comments: _____

6.[33] Performed By: _____ / _____ / _____ / _____
Operator (print) Signature Z # Date

7.1[4] Reviewed By: _____ / _____ / _____ / _____
Supervisor or designee (print) Signature Z # Date

FFS-DOP-002, Low Level Waste Operations at TA-55, R8.1

LA-UR-14-24924

NPI-7

Detailed Operating Procedure

Approval Cover Sheet

Document Number:	FFS-DOP-002, R8.1
Effective Date:	4/10/2014
Next Review Date:	4/10/2017
Supersedes:	

Title: Low Level Waste Operations at TA-55

Status:	Hazard:	For Document Control Use Only:
☐ New	☐ Low-hazard	
☐ Major revision	☒ Moderate-hazard	
☒ Minor revision	☐ High-hazard/complex	
	Use Type:	
	☒ Reference ☒ Use every Time (Attachment A, B, C & D)	

	Organization	Date	Signature
SME: David Wanningman	NPI-7		
Approved for Use By: Document Owner: Keith Lacy, *RLM*	NPI-7	4/8/14	Signature on File
Authorized for Use By: FOD: Charles Tesch, *Operations Manager*	TA55-OPS	4/10/14	Signature on File
Released: FOD: Charles Tesch, *Operations Manager*	TA55-OPS	4/10/14	Signature on File

Derivative Classification Review			
☒ UNCLASSIFIED ☐ Export Controlled Information ☐ Official Use Only ☐ Unclassified Controlled Nuclear Information Guidance Used:		☐ CONFIDENTIAL ☐ SECRET ☐ Restricted Data ☐ Formerly Restricted Data ☐ National Security Information Guidance Used:	
DC/RO Name/Z Number: Tracy Drake/140891	Organization: IRM DCS	Signature: Signature on File	Date: 4/8/14

Revision History

Document Number	Effective Date	Action	Description
FFS-DOP-002, R8.1	4/10/14	Minor Revision	Incorporate IPC1 rollup changes.
FFS-DOP-002, R8-IPC1	7/8/13	Major Revision	IPC1: • Address Organizational Name Changes & Correct Procedural Steps.
FFS-DOP-002, R7	4/23/13	Major Revision	• Add new requirements for RLUOB. • Make changes to Red Line in Document FSS-DOP-002. • Incorporate Attachment C. • Remove 5.7 Accountable Low Level Waste Management and reformat numbering. • Insert NOTE to 5.14
FFS-DOP-002, R6	9/26/12	Major Revision	IPC1: • Add new requirements for RLUOB. • Make changes to Red Line in document FSS-DOP-002.
FFS-DOP-002, R6	9/26/12	Major Revision	IPC1: • Add new requirements for Assay Waste Package. • Renumbered Forms (A-F) • TOC. • Section 3.3 Table 2: added Hoisting Equipment with Forklift. • Section 3.3 Table 3; added “Gagetek Zoo Scale”
FFS-DOP-002,R5	8/29/2012	Major Revision	Updated section 5.16. Placed in updated technical document template.
FFS-DOP-002, R4	06/08/12	Major Revision	• Revised the TSR controls to comply with the 2011 TSRs.
FFS-DOP-002, R3	4/03/12	Major	• Added statement, “Drums from any source need to have nu-con filter at all times” to 5.1 Note . • Added “and use if RWP is required” to 5.5 Warning 2 • Added “and WMC or coordinate disposal with WCO” to 5.6. • Added Appendices E and F.

Revision History, (continued)

Document Number	Effective Date	Action	Description
FSS-DOP-002, R2	3/6/2011	Major	• Deleted section on Mixed Low Level Waste Management. Updated the LCO statement in Section 1.4. • Modified 1.1, Purpose • Modified 3.1, Planning and Coordination • Removed first NOTE from 5.0 Performance • Added Appendices C and D. • Modified section 5.20, Material Risk (MAR). • Changed Attachments to Appendices. • Merge sections on low level compactable and non-compactable waste into one section call Low Level Waste Management • Deleted section on Oversize Waste. • Incorporated IPC 1
FFS-DOP-002, R1	Approved but never made effective	Major	• Incorporated/ updated the TA-55 Technical Safety Requirements to support the 2008 DSA/TSR Implementation • Mapped into new DOP template. • Updated with the annual MAR surveillance requirement and MAR limits. • Updated Hazards and Controls. • Split single Warnings that covered several areas into individual Warning boxes throughout most sections in 5.0 • Split single steps that covered several steps into individual steps throughout 5.0. • Added new notes throughout Section 5.0, most stating that “Steps in this section may be performed in any order unless otherwise specified.” • Modified the Radiological Contamination and Ionizing Radiation Hazards and Controls per RP-1 doc review.

Table of Contents

1.0 INTRODUCTION....6
- 1.1 Purpose 6
- 1.2 Scope 6
- 1.3 Applicability 6
- 1.4 Technical Safety Requirements (TSRs) only applies to PF-4/480 (PAD) 6

2.0 PRECAUTIONS AND LIMITATIONS....8
- 2.1 General 8
- 2.2 Additional Requirements and Conditions (WR Use) 11

3.0 PREREQUISITE ACTION....12
- 3.1 Planning and Coordination 12
- 3.2 Performance Documents 12
- 3.3 Special Tools, Equipment, Parts, and Supplies 13
- 3.4 Field Preparation 13
- 3.5 Approvals and Notifications 13

4.0 ACCEPTANCE CRITERIA....14

5.0 PERFORMANCE....14
- 5.1 Inspecting Drums 14
- 5.2 Inspecting Transport Containers 15
- 5.3 Inspecting Burial Boxes 15
- 5.4 Inspecting Oversize Packages 16
- 5.5 Low Level Waste Management for PF-4 17
- 5.6 Rejected Waste Items for TA55, PF-4 and RLUOB 19
- 5.7 Green is Clean Waste Management in PF-4 and RLUOB 19
- 5.8 Loading Oversize Waste Items in PF and RLUOB (Lifting Plan) 20
- 5.9 Absorbing Liquids in PF and RLUOB 21
- 5.10 Electronics Waste Management in PF and RLUOB 21
- 5.11 Minor Decontamination Operations in PF and RLUOB 23
- 5.12 Remediating Abandoned Waste or Unknown Waste Items in PF-4 and RLUOB 23
- 5.13 Removing Waste Packages from Material Management Area 23
- 5.14 Assaying Waste Packages 23
- 5.15 Inspection of HPAL Waste 24
- 5.16 Health Physics Analytical Lab ~~Drum~~ Waste Management (PF-2) 24
- 5.17 Room Trash Management 25
- 5.18 Bag Waste Volume Reduction (GIC Only) 26
- 5.19 Low Level Bulk Waste Management 26
- 5.20 Material At Risk (MAR) (only applies to PF-4 and 480 (PAD) 27
- 5.21 RLUOB Low Level Waste Management 29
- 5.22 Bag Waste Volume Reduction at RLUOB 29
- 5.23 Waste Assays at RLUOB 30
- 5.24 Material at Risk (MAR) for RLUOB 30

6.0 POST-PERFORMANCE ACTIVITIES....32
- 6.1 Testing 32
- 6.2 Restoration 32
- 6.3 Results 32
- 6.4 Verification/Independent Verification 32
- 6.5 Records Processing 32

7.0 CONTINGENCIES....32

8.0 DEFINITIONS AND ACRONYMS....32

9.0 RESPONSIBILITIES....34
- 9.1 PF-4/RLUOB Low Level Waste Operations Team 34
- 9.2 PF-4/RLUOB Waste Generators 34
- 9.3 PF-4/RLUOB Responsible Line Manager 34
- 9.4 PF-4/RLUOB RCT 34

10.0 REFERENCES....34

11.0 RECORDS....35

12.0 APPENDICES AND ATTACHMENTS 35
Attachment A, Waste Package Checklist (UET) 36
Attachment B, PF-4/PAD Inventory Checklist for LLW MAR Tracking (UET) Section 5.20 37
Attachment C, RLUOB Inventory Checklist for LLW MAR Tracking (UET) Section 5.24 38
Attachment D, Weekly Inventory Form (UET) 39
Attachment E, PF-4 Low Level Waste Green Is Clean Form (GIC) 40
Attachment F, PF-4 Low Level Waste Room Trash Form 41

1.0 INTRODUCTION

1.1 Purpose

Low level waste is described as solid waste that consists of trash-type material such as paper, plastic, rubber, cardboard, wood, metal, glass and other miscellaneous material with suspect and or contains radiation contamination < 100 nano-curies per gram and is destined for burial at TA-54 or Nevada National Security Site (N2S2). Mixed waste (in this procedure) is described as hazardous material with radioactive contamination < 100 nano-curies per gram and is managed and disposed of in various liquid and/or solid forms. This activity covers tasks related to inspecting, dismantling, packaging, transporting, and loading of low level, regulated and recyclable wastes generated within TA-55. All waste generated and packaged must meet the laboratory's Waste Acceptance Criteria (WAC) regulatory requirements.

1.2 Scope

Activities described in this DOP are located throughout TA-55. For the most part low level waste packaging activities are in the basement of PF-4, RLUOB, and mixed waste activities may be performed throughout the TA-55 security area and RLUOB. Forklift activities are also performed in the basement and outside of PF-4 and RLUOB.

1.3 Applicability

Regulatory drivers may include but are not limited to New Mexico Environmental Department (NMED), Toxic Substance Control Act, (TSCA) New Mexico Special Waste, Resource Conservation & Recovery Act (RCRA), Department of Transportation (DOT), and TA-54 Waste Acceptance Criteria requirements and Nevada National Security Site, Waste Acceptance Criteria (DOE/NV-325-Rev. 9, February 2012)

1.4 Technical Safety Requirements (TSRs) only applies to PF-4/480 (PAD)

1.4.1 Material-at-Risk (MAR), All Material Types

NOTE MAR in containers with a damage ratio of zero (i.e., encapsulated heat sources, certified Type B packages, fire-rated safes, vault water bath containers) does not contribute to offsite dose consequences and is, therefore, excluded from the limits below. In addition, for MAR in containers with a damage ratio greater than zero but less than one (i.e., fire-rated containers), the applicable damage ratio may be applied to the below limits.

LCO: MAR SHALL be limited as follows:

1. in the basement of PF-4, excluding the vault, the Robo Cal room, and the packaging/un-packaging rooms:
   a. a limit of 30 kg of Pu-equivalent of waste

AND

2. on the waste pad:
   a. a limit of 45 kg of Pu-equivalent in the Confinement Pressure Vessels

   AND

   b. a total limit of 3.6 kg of Pu-equivalent in all other packages

1.4 Technical Safety Requirements (TSRs) only applies to PF-4/480 (PAD) (continued)

NOTE Section 1.4 MAR TSR Requirements are not required for any waste item that has been surveyed and has a non-detectible activity result.

1.4.2 Material-at-Risk (MAR) for RLUOB

At RLUOB if the total weight of all LLW waste containers (including MLLW) on storage location is less than 100,000 pounds, the LLW MAR allocation of 0.5g cannot be exceeded.

NOTE 1 The two-person rule is a requirement to perform this activity and checklists and inventory sheets (Attachment B, C, and B(R)) will be used to inventory LLW to monitor against limits.

NOTE 2 Attachment B (R) RLUOB shall be submitted to RLUOB Operations Center on Quarterly basis.

[1] Complete the Weekly Inventory Form tool (Attachment C) each time a LLW waste container (including MLLW) is introduced or removed from RLUOB. (This form is an operations tool to track residence time of waste containers, not a MAR inventory requirement.)

[2] Complete Waste Package Checklist (Attachment A) for each container placed in storage.

$ **[3]** At the end of each month,
<u>THEN</u> complete the Inventory Checklist for LLW MAR Tracking (Attachment B) as a simple verification that LLW waste storage MAR is maintained well below the assumed value.

[4] <u>IF</u> LLW (including MLLW) MAR inventory is below assumed MAR limits of 0.5 g Pu equivalent at RLUOB (inventoried by either volume or weight of waste containers),
<u>THEN</u> no further action is required.

$ **[5]** If the LLW MAR inventory on the waste storage of RLUOB is above the assumed MAR limit of 0.5 g Pu equivalent, Then the MBA ___ custodian must be notified immediately so adjustments can be made in LANMAS/LIMS and compliance with MAR limits are validated.

[6] <u>IF</u> it is determined by the MBA custodian(s) that the waste storage MAR limits of either waste storage area is exceeded,
<u>THEN</u> pause work and report limits immediately to LLW FLM and Operations Center to correct discrepancy.

[7] Completed Attachments A and B (R) will be filed as waste management records. (Refer to TA55-STP-702, *TA-55 Material-at-Risk Surveillance Procedure*.)

2.0 PRECAUTIONS AND LIMITATIONS

2.1 General

A. Stop Work

All workers are responsible for pausing or stopping work when they have a reasonable belief that quality, work risks or hazards are not effectively controlled and workers have the right to do so without fear of reprisal. LANL Policy P101-18 provides more information on the differences between pausing or stopping work and the process for resuming work in either case.

If this procedure cannot be completed as written or abnormal conditions are encountered, STOP, place the work in a safe configuration if possible, and notify the Operations Center (OC) and First Line Manager (FLM).

B. Hazards and Controls

Listed below in this section are the Hazards and Controls that apply to the entire procedure

Hazard	Controls
Electrical – From operating power tools	• Use GFCI in conjunction with hand tools with cords • Do not use any tools that have frayed/bad cords • Do not use broken rechargeable batteries
Exposure to Ionizing Radiation or Radiological Contamination	• TA55-RD-555, *TA-55 Radiation Protection Requirements* Radiation Worker II • Facility confinement and ventilation systems • Continuous air monitors (CAMs) • PPE, anti-Cs, coveralls, gloves, booties. • Radioactive containment enclosures and shielding • Personal dose/exposure surveys • Contamination monitoring systems. • Minimize time, maximize distance • Read and follow all radiological posting. • If general area dose rate is ≥75 mrem/hr or contact dose rate is ≥700 mrem/hr a RWP is required. • Maintaining good housekeeping at all work areas. • Facility-specific PPE required unless different as specified in a RWP for the room or area. • PA-RD-01006 RLUOB Facility Radiation Protection
Handling parts containing lead, cadmium	• HAZWOPER training required • Gloves, safety glasses with side shields, safety shoes

2.1 General (continued)

Hazard	Controls
High noise level (> 85 dB)	• For high noise areas and activities obey postings for noise protection requirements. • For TA-55, see postings in the PF-4 basement and RLUOB • Wear ear protection with Noise Reduction Rating (NRR) of 29 (muffs NRR of 25). • Follow requirement in P101-3, *Hearing Conservation/Noise Program*
Inclement weather	• Follow the "30-30 rule": When lightning is determined to be less than 30 seconds (six miles) away, seek shelter, for at least 30 minutes after the last thunder is heard, in one of the following locations, given in order of preference: o Steel-framed building; o Enclosed vehicle with a steel roof; or o Low ground away from solitary trees and below and away from high points. • Obtain lightning protection pager from LANL Radio shop and have pager upgraded to receive lightning protection notices.
Manual Lifting	• Use proper lifting techniques and equipment. • Limit lifting to 30 lbs or less per person. • Use two people for heavy lifts. • Avoid awkward and forceful positions during lifts. • Safety shoes
Other: Sharp Objects	• Use PPE cut resistant gloves. • Leather or mechanic gloves for pinch hazards.
Projectiles	• Use safety glasses with side shields.
Prolonged Sun Exposure (UV)	• Apply sunscreen with a minimum SPF of 15 • Wear cover-up clothing such as a hat, long pants, and long sleeves as necessary.
Repetitive motion (includes repetitive activities not including glovebox work.)	Take frequent breaks to avoid excessive fatigue or strains.
Temperature or humidity extremes	• If indoor temperature is above 85 °F for 1 hour, stop work, turn off instruments, and notify management. • If possible, perform the work during cooler periods such as early morning or late afternoon/evening. • Wear appropriate warm clothing for cold conditions, if necessary carry extra clothing. • Know the signs of hypothermia and hyperthermia.

2.1 General (continued)

Hazard	Controls
Temperature or humidity extremes (continued)	• Call 911 and your supervisor when symptoms are noticed or suspected in your co-worker or yourself. • Drink plenty of fluids. • Follow requirements set in the *Thermal Stress Awareness*, self study course. • Remain hydrated to prevent heat stress issues.
Tripping, uneven terrain and falls	• Wear appropriate clothing such as long pants, steel-toe boots (no sandals). • Be aware of the surrounding terrain, paying attention to foot and body placement. • Do not work within 6 feet of any edges with a drop of greater than 6 feet unless fall protection has been installed or evaluated and approved by the Health and Safety Team.

C. Unique Entry Conditions

Only trained and authorized persons may enter PF-4 and RLUOB unless escorted. Badge reader serves as access control. For security reasons, the two-person rule with HRP is required and all packages must be double locked with two different combinations known by different team members. Waste containers are inspected before use and put out of service if not safe. Forklift and hoisting and rigging operations are used for some activities and a separate procedure is used in conjunction.

D. Basis for Use Categorization/Sequence of Steps

The sections and steps in the Performance section are to be performed in sequence unless otherwise stated.

The activities in this DOP are completed on a routine bases. The RLM has determined it as a reference procedure because if the process is not performed exactly in the order written it will not increase the risk to personnel and/or create a hazard. The attachments (A, B, C and D) are quality documents and have been determined to be UET.

E. Criticality Safety Limit Approval (CSLA) Requirements

Follow CSLA Requirements as applicable.

F. Required Permits

- Radiological Work Permit (RWP) as required by RCT Team Leader
- NMED Permit

2.1 General (continued)

G. Training and/or Qualifications

PF-4 Unescorted Access:

- TP# 1393, TA-55 Glovebox Worker Training
- TP# 5671, TA-55 PF-4 Escort: Protected Area (PA)
- #9042, TA-55 PA Access Training
- #10327, PF-4 Basic Worker Program
- TP#256 Hazardous Waste Worker

RLUOB Unescorted Access:

- TP#161 RLUOB Facility Access
- TP#1768 RLUOB Lab Access
- TP#1769 RLUOB Loading Dock Access

Forklift:

- TP# 121, Forklift Operator Training Requirements
- FFS-DOP-008, *Forklift Operations at TA-55*

Crane Training:

- TP# 122, Incidental Crane Operator Training Requirements (if required)

Rad Worker:

- TP #115, Rad Worker II Training Requirements

H. Cautions

Not applicable.

I. Material Control and Accountability

Covered in section **5.13**,, Removing Waste Packages from Material Management Area and **5.16**, Health Physics Analytical Lab Waste Management. TA55-RD-585, Nuclear Material Controls and Accountability.

2.2 Additional Requirements and Conditions (WR Use)

Not applicable.

3.0 PREREQUISITE ACTION

The section and the steps in the Prerequisite Action section are not required to be performed in sequence, unless otherwise stated.

3.1 Planning and Coordination

[1] Ensure that a pre-job brief has been conducted in accordance with PA-AP-01020, *Pre-Job Briefing and Post Job Review.*

[2] Obtain permission from the Operations Center before conducting any TSR surveillance or inspection, and before accessing boundary for confinement vessel inspection..

[3] Schedule the work with the Facility Operations Director organization.

[4] Verify that tool, equipment, and material numbers in the work area match those specified.

[5] Contact NDA/Rad protection for Assay support and Schedule on POD (5.14)

[6] Schedule RCT support for Bag Waste Volume Reduction (5.18)

[7] Schedule RCT support for Bag Waste Volume Reduction at RLUOB (5.22)

[8] Schedule NPI-1 Support to assay box(es) of RLUOB (5.23)

[9] Official copies of Attachments can be obtained from document control as follows:

- *Waste Acceptance Form* (WAF) can be found in TA55-RD-539.
- Attachment A, *Waste Package Checklist* can be found on NPI-7 Shared Files on 'win\ta55\projects' in the "WES-FFS Procedural Attachments" folder.
- Attachment B, *PF-4/PAD Inventory Checklist for LLW MAR Tracking* can be found on NPI-7 Shared Files on 'win\ta55\projects' in the "WES-FFS Procedural Attachments" folder.
- Attachment B(R), *RLUOB Inventory Checklist for LLW MAR Tracking* can be found on NPI-7 Shared Files on 'win\ta55\projects' in the "WES-FFS Procedural Attachments" folder.
- Attachment C, *Weekly Inventory Forms* can be found on NPI-7 Shared Files on 'win\ta55\projects' in the "WES-FFS Procedural Attachments" folder.

3.2 Performance Documents

- DOE/NV-325-Rev. 9, Nevada Test Site Waste Acceptance Criteria
- P930-1, LANL Waste Acceptance Criteria
- TA55-RD-539, TA-55 Waste Management Requirement
- FFS-DOP-008, Fork Lift Operations at TA-55

3.3 Special Tools, Equipment, Parts, and Supplies

Table 1 Equipment Description and Location

Equipment Number (N/A if no number)	**Equipment Name**	**Manufacturer/ Model**	**Description**	**Location**
N/A	Forklifts	Various	1 ton–20 tons capacity	TA-55
N/A	Rigging Equipment	Various	0–10K capacity	TA-55
N/A	Calibrated Scale	Various	12K	TA-55
N/A	Gagetej Zoo Scale	Various	0-10 K capacity	TA-55

Table 2 Tools and Fixtures

Tool Number	**Title/Description**
N/A	Wrench: adjustable, boxed, open-end, bung, calibrated torque
N/A	Cordless tools: cordless impact drill, SawZall, Porta-Ban
N/A	Blade: blade, scraper
N/A	Hand tools: screwdrivers, tape measure, pliers, ratchets
N/A	Shovel
N/A	Safety Device: steel rod with clips
N/A	Hoisitng Equipment For Forklift
N/A	OMEGA Plus Vacuum System

Table 3 Process Materials

Process Materials Number	**Title/Description**	**Amount Required** (if required)
N/A	Sawdust	As required
N/A	Kitty litter	As required
N/A	Rags	As required
N/A	Absorbent material	As required
N/A	Burial boxes	As required
N/A	Transport containers	As required
N/A	Surface cleaner (i.e., fantastic)	As required
N/A	Locks and TIDs	As required
N/A	Markers	As required
N/A	Bag ties and Tape	As required
N/A	Plastic Bags	As required

Table 4 Floor Stock/Shop Aids

Floor Stock Number	**Title/Description**	**Quantity** (if required)
N/A	N/A	N/A

Table 5 Software

Software Number	**Title/Description**
WCATS	Compliance and Tracking Database

3.4 Field Preparation

Not Applicable.

3.5 Approvals and Notifications

Covered in section **5.13**, *Removing Waste Packages from Material Management Area*.

4.0 ACCEPTANCE CRITERIA

P930-1 LANL WAC, NNSS WAC.

5.0 PERFORMANCE

All major sections in the performance in 5.0 may be performed independently, concurrently, or out of sequence as directed by the PIC.

NOTE Steps in the individual sections of 5.0 are performed in sequence unless otherwise stated.

5.1 Inspecting Drums

WARNING	
Hazard:	**Drums may be pressurized from changing temperatures and bung may fly off.**
Control:	**Ensure bung is removed at arms distance.**

NOTE Any containers showing dents, bulging, cracks, excessive rust, etc., are to be taken out of service. Drums from any source need to have nu-con filter at all times.

[1] Walk around all sides of package.

[2] Look for obvious dents, bulging, cracks, excessive rust, and any other imperfections.

[3] Slowly remove bung using bung wrench to vent.

[4] Use hand-tool to detach bolt from ring then remove ring, lid.

[5] Inspect inner container and check for obvious dents, cracks, or imperfections.

[6] Ensure filter has been installed on the lid of the drum (i.e., NucFil filter)

[7] Reattach lid, bung, and ring when complete.

[8] IF the drum is not to be used immediately,
THEN attach locks to secure the lid.

5.0 PERFORMANCE (continued)

5.2 Inspecting Transport Containers

WARNING

Hazard: **Lid is heavy (weighs approximately 110 lbs.).**

Control: **Use two-person rule and apply shocks safety device, if needed. Use proper lifting techniques and watch for pinch points.**

[1] Walk around all sides of package.

[2] Look for obvious dents, cracks, excessive rust, and any other imperfections.

[3] Any containers showing dents, bulging, cracks, excessive rust etc., are to be taken out of service.

[4] Using hand tools, remove bolts that may exist around top of lid.

[5] Use handles located on each side of lid, lift container lid/cover to inspect inner package.

[6] Close lid and apply bolts when complete.

[7] IF container is not to be used immediately,
THEN attach locks to secure lid.

5.3 Inspecting Burial Boxes

WARNING

Hazard: **Lid is heavy (weighs approximately 110 lbs.).**

Control: **Use two-person rule. Use proper lifting techniques. Watch for pinch points.**

NOTE: Any containers showing dents, bulging, cracks, excessive rust, etc., are to be taken out of service.

[1] Walk around all sides of package.

[2] Look for obvious dents, cracks, excessive rust, and any other imperfections.

[3] Any containers showing dents, bulging, cracks, excessive rust, etc., are to be taken out of service.

[4] Using hand tools, remove bolts that may exist around top of lid.

[5] With an operator at each end, lift lid and remove the box or slide to the side so there is enough room to see all sides of inner package.

[6] Close when complete.

[7] IF container is not to be used immediately,
THEN attach locks to secure lid.

5.0 PERFORMANCE (continued)

5.4 Inspecting Oversize Packages

WARNING 1

Hazard: **Lifting hazard.**

Control: **Use proper lifting techniques.**

WARNING 2

Hazard: **Pinch points hazard.**

Control: **Use leather or mechanic's gloves.**

WARNING 3

Hazard: **Overhead hazard.**

Control: **Use hardhat and establish a cone of safety.**

[1] Walk around all sides of package.

[2] Look for obvious dents, cracks, excessive rust and any other imperfections.

[3] Any containers showing dents, bulging, cracks, excessive rust, etcl., are to be taken out of service.

[4] Obtain certified and tagged lifting devices and inspect forklift.

[5] Attach lifting devices to forklift and lifting hooks of lid.

[6] Apply tension to lid while operators remove bolts around package.

[7] Once bolts are removed,
THEN lift lid and move out of the way to a safe location.

[8] Inspect inner package and inner lid and replace when complete.

[9] IF container is not to be used immediately,
THEN attach locks to secure lid.

5.0 PERFORMANCE (continued)

5.5 Low Level Waste Management for PF-4

NOTE 1 The two-person rule is a requirement to perform this activity and use checklist where applicable (Attachment A).

NOTE 2 Low level waste storage limits and monthly tracking requirements are detailed in section **5.20** *Material at Risk (MAR)*.

[1] Inspect waste at generator site.

[a] Ensure items are safe to handle (contaminated waste items must be wrapped in plastic) and items listed on WAF match waste items being disposed.

[b] Look for any hazardous material or liquids that may be present, items like wood, hard plastic, and metal waste are allowed.

[2] Have generator complete current version of *Waste Acceptance Form (WAF)*, Appendix 1.

[3] Ensure alpha survey is < than 100,000 dpm per 100cm^2 (<50,000 cpm per 100cm^2).

[a] IF > than 100,000 dpm,
THEN manage as TRU Waste.

[4] IF waste items are acceptable,
THEN initial generator visual inspection section of WAF and date.

[5] Coordinate a time when generator can take waste to transfer station in basement of PF-4 or Room 1124/1125 in RLUOB.

[6] Receive waste item at transfer station in basement.

[7] Ensure item taken to basement matches what was inspected at generator site. If waste items do not match see section **5.6**, *Rejected Waste Items.*

[8] Obtain and complete waste package checklist (see Attachment A, *Waste Package Checklist*).

5.5 Low Level Waste Management (continued)

WARNING 1

Hazard: **Pinch points.**

Control: **Use leather or mechanic's gloves.**

WARNING 2

Hazard: **Possible radioactive contamination.**

Control: **Ensure items are properly labeled. Contact RCT for instructions and use if RWP is required**

WARNING 3

Hazard: **Lifting.**

Control: **Use proper lifting techniques, and use two-person rule.**

NOTE If containers are new or empty RCT is not required.

[9] Contact RCT before opening active container.

[10] Slowly lift lid at both ends of burial box, have RCT complete survey.

[a] IF no contamination is detected,
THEN open lid,
AND move to safe location.

[b] IF contamination is detected,
THEN replace lid, follow RCT instructions, and contact supervisor

[c] Using hand and power tools,
THEN dismantle, cut, size reduce items that are too big to fit in box or to fill void spaces.

NOTE For heavier items see section **5.8**, *Loading Oversize Waste Items in PF-4 and RLUOB (Lifting Plan)*.

[11] Manually lift items (no more than approximately 30 lbs.) into box or get assistance from another operator.

[12] Replace lid.

[a] IF container is still in process

THEN install locks with two different combinations known by two different Operators.

[b] IF container is full

THEN refer to section 5.13.

5.5 Low Level Waste Management for PF-4 (continued)

5.6 Rejected Waste Items for TA55, PF-4 and RLUOB

[1] Contact supervisor and WMC or coordinate disposal with WCO

[2] Contact waste generator for pick-up.

[3] Contact QA representative for nonconformance reporting (NCR) justification.

5.7 Green is Clean Waste Management in PF-4 and RLUOB

NOTE The two-person rule is a requirement to perform this activity; use checklist where applicable (Attachment A).

[1] Obtain and complete waste package checklist Attachment A.

WARNING 1

Hazard: **Lid is heavy (weighs approximately 110 lbs.).**

Control: **Use proper lifting techniques. Use two-person rule.**

WARNING 2

Hazard: **Pinch Points**

Control: **Use leather or mechanic's gloves.**

WARNING 3

Hazard: **Possible radioactive contamination**

Control: **Ensure items are surveyed (i.e. verify survey results (NDA) on the bag.). Contact RCT for instructions.**

NOTE If containers are new or empty RCT is not required.

5.7 Green is Clean Waste Management in PF-4 and RLUOB (continued)

[2] Contact RCT before opening container, if container is in process.

[a] Slowly lift lid at both ends of container, have RCT complete survey.

[b] IF no contamination is detected,
THEN open lid,
AND move to safe location.

[c] IF contamination is detected,
THEN replace lid, follow RCT instructions, and contact supervisor

[3] Transfer aluminum crates containing Green is Clean (GIC) bags to designated staging area.

[4] Remove bags one at a time from aluminum bins and inspect (unauthorized waste items in bags are rejected such as hazardous/regulated materials, liquids, and sharps). See section **5.6** *Rejected Waste Items*.

[5] Load bags into the container.

[6] When finished, and if container is still in process,
THEN close container
AND apply two different locks to each side with two different combinations known by two different operators.

[7] Take aluminum bins back to appropriate staging area.

[8] When containers are full, go to section **5.13,** *Removing Waste Packages from Material Management Area.*

5.8 Loading Oversize Waste Items in PF and RLUOB (Lifting Plan)

NOTE Most activities are covered under forklift operating procedures. Use these steps in conjunction with steps in non-compactable waste disposal; see section **5.5**, *Low Level Waste Management*.

If item does not need rigging skip Step 1 and proceed to Step 2

NOTE: Attachments must be specific and certified to the forklift being used.

[1] If items need rigging perform the following:

[a] Obtain all rigging equipment and ensure it is certified and tagged.

[b] Attach rigging equipment to forklift and item(s) to be lifted.

WARNING

Hazard: Utility, duct work, and other low hanging systems or obstacles may come in contact with forklift if raised too high.

Control: A spotter will be used all times when operating a Forklift within PF-4.

5.8 Loading Oversize Waste Items in PF and RLUOB (Lifting Plan) (continued)

[c] Lift items slowly and communicate with spotter.

[d] Maneuver items into container and lower forks to a safe spot.

[e] Remove rigging from items and move forklift to safe location.

[2] If items need NO rigging perform the following

[a] Establish a cone of safety.

[b] Use a spotter for items that can be loaded using the forklift.

[c] IF safe to do so,
THEN lift items on forks and slide off into waste container.

5.9 Absorbing Liquids in PF and RLUOB

Refer to FFS-DOP-014.

5.10 Electronics Waste Management in PF and RLUOB

NOTE The two-person rule is a requirement to perform this activity; use checklist where applicable (Attachment A).

[1] Inspect electronic waste at generator site ensuring NO hazardous materials or liquids other than solder joints are present.

[2] Generator is responsible to complete current version of WAF (Appendix 1).

[3] Verify items are safe to handle (contaminated waste items must be wrapped in plastic and are given to the RCRA team) and verify items listed on WAF match waste items being disposed.

[4] IF waste items are acceptable,
THEN initial WAF and coordinate with generator for a time to take electronics to transfer station in basement.

5.10 Electronics Waste Management in PF and RLUOB (continued)

[5] After receiving waste at transfer station in basement, obtain waste package checklist if starting a new container, if not use in process container (see Attachment A).

[6] Inventory items taken to basement and ensure they match what was inspected at generator site. Place items into a temporary staging area, or see step **5.10[9]**, or put into a temporary storage container.

[7] Schedule the RCT on the daily planning schedule.

WARNING 1

Hazard: **Possible contamination.**

Control: **If contamination is detected, follow RCT instructions.**

WARNING 2

Hazard: **Lifting**

Control: **Use proper lifting techniques. Use two-person rule where necessary.**

NOTE If containers are new or empty RCT is not required to open the container.

[8] IF electronics are being stored in a container,
THEN contact RCT before opening the waste container:

- **[a]** Have RCT complete survey.
- **[b]** IF no contamination is detected,
  THEN remove lid,
  AND move to safe location.
- **[c]** IF contamination is detected,
  THEN replace lid, follow RCT instructions, and contact supervisor

[9] Remove electronics, put on dismantling table and have RCT do a direct and smear survey. If contamination is detected contact RCRA crew for disposal.

[10] Using hand tools, remove screws, nuts, bolts, clips, cut /dismantle components as required to remove circuit boards from electronic equipment and set circuit boards aside for RCT survey.

[11] After circuit board survey and RCT "free release"
THEN put circuit board into recycle container and apply two different locks (with two different combinations known by two different operators) to container when not in use.

[12] Put all excess material into container; see section **5.5**, *Low Level Waste Management.*

[13] When electronics (example, circuit boards) container is full,
THEN see section **5.13**, *Removing Waste Packages from Material Management Area*.

[14] Contact Salvage recycle operations and coordinate transportation of electronics container.

5.0 PERFORMANCE (continued)

5.11 Minor Decontamination Operations in PF and RLUOB

NOTE Some items or containers may need some decontamination to remove low level amounts of radioactive contamination. RCT must be present and an RWP is required.

[1] Contact RCT and schedule decontamination activity

[a] Have RP-1 survey items.

[2] Moisten decontamination rags with decontamination solution (i.e., Fantastik).

[3] Wipe-down contaminated area with rag and have RP-1 re-survey item, put rag in low level waste can or bag.

[4] Put clean items in designated area and contaminated items in bag and dispose of as low level waste.

[5] Dispose of contaminated material as low level waste; see section **5.5**, *Low Level Waste Management*.

5.12 Remediating Abandoned Waste or Unknown Waste Items in PF-4 and RLUOB

Refer to FFS-DOP-014.

5.13 Removing Waste Packages from Material Management Area

NOTE 1: Ensure all TID and Rad Control requirements are met.

NOTE 2: **No Accountable amount of waste is allowed on Storage PAD (480).**

[1] Ensure Steps 1-12 of Attachment A are completed.

5.14 Assaying Waste Packages

NOTE 1: Most activities are covered under forklift operating procedures (FFS-DOP-008).

NOTE 2: Follow Postings/monitoring requirements for TA-55 Controlled Areas outside of PF-4: Waste Holding Area-Contamination survey of containers required prior to removing from area (Contamination surveys are valid for two days from the date they are surveyed).

[1] Perform forklift and TSD inspection when required. (FFS-DOP-008, FFS-DOP-003 and RP-1 Postings).

[2] Stage turntable near 185.

[3] Assist assay personnel with instruments.

[4] Remove and stage packages for assay.

[5] Take packages back to storage area after assay.

[6] Take turntable back to storage.

5.0 PERFORMANCE (continued)

5.15 Inspection of HPAL Waste

[1] Inspect waste at generator site.

[2] Ensure packages are labeled and released by RCT.

[3] Transport packages to Guard Station 116 and pass through X-ray machine.

[4] Take packages to basement.

[5] Follow disposal instructions, see section **5.5**, *Low Level Waste Management,* or see section **5.8**, *Green is Clean Waste Management*.

5.16 Health Physics Analytical Lab Waste Management (PF-2)

NOTE: When using new boxes RCT is not required from at PAD or opening of Box.

[1] Schedule waste disposal on Plan Of the Day and request RCT support for movement of ST90 from PAD (480) and to dispose of waste.

[2] Contact waste generators for HPAL and change rooms (locker room attendant) for waste inspection.

[3] Send an e-mail to Waste Certifying Officer (WCO) to schedule waste inspection.

[4] Inspect burial boxes and complete checklist (Attachment A). For burial box inspection instruction refer to 5.3.

[5] Once waste disposal is scheduled, take waste container to staging area near back side of men's change room.

[6] Bring waste packages from HPAL and change rooms to packaging area and have RCT survey and insure WAF is complete.

[7] Ensure waste inspection was done by Waste Certification Officer (WCO) then load.

[8] Ensure Waste Certification Officer has initialed Section 5 of Attachment A, *Waste Package Checklist.*

[9] Close if in process and lock container.

[10] When full apply gasket and seal container according to manufacturing specification and weigh.

[11] Take container back to storage area.

5.0 PERFORMANCE (continued)

5.17 Room Trash Management

WARNING 1

Hazard: **Radioactive Contamination.**

Control: **Check door postings for entry requirements.**

WARNING 2

Hazard: **Radioactive Contamination from breached bag.**

Control: **Do not touch bag and contact RCT.**

NOTE 1: Use yellow low level waste bags for yellow tops and use green stripe bags for GIC waste.

NOTE 2: Only two bags of room trash are allowed outside controlled metal containers in laboratory areas.

[1] Open flip-top container and remove upper part of plastic bag from outer rim/straps of container.

[2] Pig-tail yellow plastic bag at the top and apply tape (for GIC waste use zip tie or tape).

[3] Remove plastic bag from container.[1] (see warning 2 above).

[4] Write room number on bag with permanent marker.

[5] Put new bag in container and drape over straps then push straps down to secure bag.

[6] Contact RCT to smear bag.

[7] Verify RCT markings (dose rate, contamination level) if below allowable levels (NDA for contamination) put into cart in corridor.

[8] If levels are above specified, contact generator or FLM.

[9] Take cart to basement and load waste bags into containers in accordance with section **5.5** or **5.7**, as applicable.

5.0 PERFORMANCE (continued)

5.18 Bag Waste Volume Reduction (GIC Only)

WARNING

Hazard: Contamination
Control: Follow RCT Instructions

[1] Take transfer carts to corridors and vacuum, zip-ties and tape into labs or hallways.

[2] Locate an electrical outlet and establish reduction location.

[3] Turn on vacuum, and position nozzle into top of bag.

[4] Gather plastic bag on top of can and form a seal around nozzle with hand.

[5] Apply zip tie around plastic bag and pull tight so a seal forms around nozzle.

[6] Remove as much air out of bag as possible and remove vacuum nozzle while RCT surveys nozzle.

[7] Fully tighten zip tie (tape if necessary).

[8] Write room number on bag, continue removing air out of all bags until complete.

[9] Have RCT survey bags for contamination and dose rate.

[10] Take bag to corridor and put into transfer cart.

5.19 Low Level Bulk Waste Management

NOTE 1 A WAF is attached to waste before accepting. The Waste Acceptance Form can be found in TA55-RD-539-FM1 attachment A-20.

NOTE 2 Low level waste storage limits and monthly tracking requirements are detailed in section **5.20** *Material at Risk (MAR).*

[1] Inspect pallet jack for safe operation.

[2] Schedule time with WCO to load waste in basement.

[3] Inspect waste container (use waste package checklist Attachment A).

[4] Inspect path in basement and corridors where container will be transported.

[5] Move container upstairs via elevator.

[6] Move container through corridors, stop at each laboratory, ensure WAF is complete, collect and verify waste items with WCO and put in container.

[7] Move waste container to basement~~,~~ close and lock container (see **NOTE 2** above).

5.0 PERFORMANCE (continued)

$

5.20 Material At Risk (MAR) (only applies to PF-4 and 480 (PAD)

WARNING

Hazard: **MAR limit has been compromised.**

Control: **If at any time during the performance of this procedure it is suspected or known that a MAR limit has been compromised (a) pause work, (b) notify supervision and the Operations Center, and (c) await further instructions.**

NOTE 1 Waste containing MAR is stored in two primary locations:

a. basement of PF-4 (MBA 746), and
b. outside waste storage pad west of PF-4 (MBA 774).

Waste storage locations have MAR limits as detailed in section 1.4 TSR's.

$ **NOTE 2** LLW (including MLLW) and TRU waste can be stored in both waste storage locations. The MAR inventory of all waste types must be tracked to insure TSR limits are not exceeded. TRU waste and accountable LLW MAR is tracked by MBA on LANMAS. The assumed contribution to MAR from unaccountable LLW is:

0.10 Kg Pu equivalent in the basement MBA 746, and
0.50 Kg Pu equivalent on the waste storage pad MBA 774

TRU waste and accountable LLW is managed and MAR tracked in LANMAS per TA55-DOP-016 "*TA55 Material Transfer Procedure*". Non-accountable LLW (including MLLW) is inventoried separately (exempt from TA55-DOP-016 requirements) to insure that the assumed contribution to the TSR MAR limits for LLW is not exceeded.

NOTE 3 LLW MAR will be tracked initially by waste volume. If less than 20 ST90 waste container volume equivalents are in storage in the PF-4 basement (1,920 ft3 or 54 m3), the assumed MAR allocation of 0.10 Kg Pu equivalent (0.33% of total allowable MAR for waste) cannot be exceeded based on maximum package weight and activity limits for LLW. [Ref: LA-UR-10-06688 Assessment of *TA-55 Low-Level Radioactive Waste MAR and Proposed Methodology for Tracking*.] Similarly, if less than 100 ST90 waste container equivalents (9,600 ft3 or 270 m3) are in storage on the waste storage pad, the assumed MAR allocation of 0.50 Kg Pu equivalents cannot be exceeded.

If it is necessary or desired for the above storage volumes "limits" to be exceeded or if volume measurements are not easily obtained, an alternative method to ensure LLW MAR allocations are not exceeded is to weigh all LLW waste containers. If the total weight of all LLW waste containers (including MLLW) in the PF-4 basement is less than 200,000 pounds, the LLW MAR allocation of 0.10 Kg cannot be exceeded. Similarly, if the total weight of all LLW waste containers (including MLLW) on the

5.20 Material At Risk (MAR) (only applies to PF-4 and 480 (PAD) (continued)

waste storage pad is less than 1,000,000 pounds, the LLW MAR allocation of 0.50 Kg cannot be exceeded.

NOTE 4 The two-person rule is a requirement to perform this activity and checklists and inventory sheets (Attachment B, C, and D) will be used to inventory LLW to monitor against limits.

[1] Complete the Weekly Inventory Form tool (Attachment D) each time a LLW waste container (including MLLW) is introduced or removed from the PF-4 basement, or outside storage pad. (This form is an operations tool to track residence time of waste containers, not a MAR inventory requirement.)

[2] Complete Waste Package Checklist (Attachment A) for each container placed in storage.

$ **[3]** At the end of each month,
THEN complete the Inventory Checklist for LLW MAR Tracking (Attachment B) as a simple verification that LLW waste storage MAR is maintained well below the assumed value.

[4] IF LLW (including MLLW) MAR inventory is below assumed MAR limits of 0.10 Kg Pu equivalent in the PF-4 basement, and 0.50 Kg Pu equivalent on the waste storage pad (inventoried by either volume or weight of waste containers),
THEN no further action is required.

$ **[5]** IF the LLW MAR inventory in the PF-4 basement is above the assumed MAR limit of 0.10 Kg Pu equivalent,
THEN the MBA 746 custodian must be notified immediately so adjustments can be made in LANMAS and compliance with MAR limits are validated.

$ **[6]** IF the LLW MAR inventory on the waste storage pad is above the assumed MAR limit of 0.50 Kg Pu equivalent,
THEN the MBA 774 custodian must be notified immediately so adjustments can be made in LANMAS and compliance with MAR limits are validated.

[7] IF it is determined by the MBA custodian(s) that the waste storage MAR limits of either waste storage area is exceeded,
THEN pause work and notify LLW FLM and Operations Center.

[8] Completed Attachments will be filed as waste management records.

5.0 PERFORMANCE (continued)

5.21 RLUOB Low Level Waste Management

Low Level Waste

WARNING

Hazard: lifting, sharps, pinch points
Control: Use a second person, cut resistant gloves
Caution: See sections 5.1 – 5.4 for inspectiong waste containers

[1] Inspect waste items at generator site
[2] Ensure waste acceptance form is complete
[3] If waste is acceptable (ie. no hazardous materials or liquids) initial WAF
[4] Coordinate time and date with generator to take waste to waste management room
[5] Receive waste in waste management room and verify waste is what is listed on WAF
[6] Schedule WCO (RP-1 if required) to inspect waste
[7] Request a container data package from WCATS coordinator
[8] Obtain and complete Attachment A (Waste Package Checklist)
[9] Open burial box and load waste
[10] Complete WAF
[11] Close burial box and lock when not in use
[12] When full follow manufactures closure instructions and ensure a seal is applied to box
[13] Fill out Inventory Checklist C

5.22 Bag Waste Volume Reduction at RLUOB

WARNING

Hazard: Contamination
Control: Follow RCT instructions

[1] Take transfer carts to corridors and vacuum, zip-ties and tape into labs or hallways.
[2] Locate an electrical outlet and establish reduction location.
[3] Turn on vacuum, and put nozzle into top of bag.
[4] Gather plastic bag on top of can and form a seal around nozzle with hand.
[5] Apply zip tie around bag covering nozzle.

5.22 Bag Waste Volume Reduction at RLUOB (continued)

[6] Remove as much air out of bag as possible and remove vacuum nozzle while RCT surveys nozzle.

[7] Fully tighten zip-tie to form a seal of bag.

[8] Write room number on bag and continue on all bags until complete.

[9] Have RCT survey bags for contamination and dose rate.

[10] Take bag to corridor and put into transfer cart.

[11] Take cart with waste items to waste management room and starting at step 6, follow steps in Low Level section (5.22).

5.23 Waste Assays at RLUOB

NOTE: RLUOB Waste Boxes will be moved to TA-50 for Storage and Shipment.

[1] Coordinate area where assays will take place
[2] Move containers to appropriate location
[3] After assay take box back to waste management room
[4] After receiving report , complete attachment B
[5] Coordinate with WMC at TA-50
[6] Coordinate removal from facility to TA-50
[7] Give completed data package to WCATS coordinator who enter data and give TA-50 WMC package

5.24 Material at Risk (MAR) for RLUOB

NOTE 1: LLW (including MLLW) and TRU waste can be stored in both waste storage locations. TRU waste and accountable LLW MAR is tracked by MBA on LANMAS/LIMS. The assumed contribution to MAR from unaccountable LLW is:

0.5 g Pu equivalent on the RLUOB, Room 1124/1125 MBA 600_.

NOTE 2: LLW MAR will be tracked initially by waste volume. If less than 10 ST90 waste container volume equivalents are in storage in the RLUOB, Room 1124/1125 (900 ft3 or 27 m3), the assumed MAR allocation of 0.5 g Pu equivalent cannot be exceeded based on maximum package weight and activity limits for LLW. [Ref: LA-UR-10-06688 Assessment of *TA-55 Low-Level Radioactive Waste MAR and Proposed Methodology for Tracking*.]

LLW MAR will be tracked initially by waste volume.

At RLUOB if the total weight of all LLW waste containers (including MLLW) on storage location is less than 100,000 pounds, the LLW MAR allocation of 0.5g cannot be exceeded.

5.24 Material at Risk (MAR) for RLUOB (continued)

NOTE 3: The two-person rule is a requirement to perform this activity and checklists and inventory sheets (Attachment B, C, and B(R)) will be used to inventory LLW to monitor against limits.

[1] Complete the Weekly Inventory Form tool (Attachment C ~~(R)~~) each time a LLW waste container (including MLLW) is introduced or removed from RLUOB. (This form is an operations tool to track residence time of waste containers, not a MAR inventory requirement.)

[2] Complete Waste Package Checklist (Attachment A) for each container placed in storage.

[3] At the end of each month,
THEN complete the Inventory Checklist for LLW MAR Tracking (Attachment B) as a simple verification that LLW waste storage MAR is maintained well below the assumed value.

[4] IF LLW (including MLLW) MAR inventory is below assumed MAR limits of 0.5 g Pu equivalent at RLUOB (inventoried by either volume or weight of waste containers),
THEN no further action is required.

[5] If the LLW MAR inventory on the waste storage of RLUOB is above the assumed MAR limit of 0.5 g Pu equivalent, Then the MBA 600 custodian must be notified immediately so adjustments can be made in LANMAS/LIMS and compliance with MAR limits are validated.

[6] IF it is determined by the MBA custodian(s) that the waste storage MAR limits of either waste storage area is exceeded,
THEN pause work, notify LLW FLM and Operations Center.[7]Completed Attachments A and C ~~B (R)~~ will be filed as waste management records.

6.0 POST-PERFORMANCE ACTIVITIES

6.1 Testing

Not applicable.

6.2 Restoration

Not applicable.

6.3 Results

Not applicable.

6.4 Verification/Independent Verification

Not applicable.

6.5 Records Processing

Refer to Section 11.0

7.0 CONTINGENCIES

Not applicable.

8.0 DEFINITIONS AND ACRONYMS

Term	Definition
$	Steps that implement TSRs
AWC	Area Work Coordinator
CAM	Continuous air monitor
CSLA	Criticality Safety Limit Approval
Design Features	Design features of a nuclear facility specified in the technical safety requirements that, if altered or modified, would have a significant effect on safe operation.
Detailed Operating Procedure	Operations-level written instructions that describe activities in a systematic format.
DOP	Detailed Operating Procedure
DOT	Department of Transportation
FLM	First Line Manager
GIC	Green is Clean
HPAL	Health Physics Analytical Laboratory
HPRMS	Health Physics Radioactive Material Survey
HRP	Human Reliability Program
IDES	Item Description

8.0 DEFINITIONS AND ACRONYMS (continued)

Term	Definition
LAMCAS	Local Area Material Control and Accountability System
LLW (Low Level Waste)	Solid waste that consists of trash-type material such as paper, plastic, rubber, cardboard, wood, metal, glass and other miscellaneous material with suspect and or contains radiation contamination < 100 nano-curies per gram and is destined for burial at TA-54 or NTS
MAR	Material at risk
MBA	Material Balance Area
MC&A	Materials Control and Accountability
Mixed waste	hazardous material with radioactive contamination < 100 nano-curies per gram and is managed and disposed of in various liquid and/or solid forms
Mode	Any one inclusive combination of facility conditions used for assigning applicability of safety equipment and limits as specified in Table 1.1-1 of the 2011 TSRs.
NCR	Nonconformance Reporting
NMED	New Mexico Environmental Department
NNSS	Nevada National Security Site
OC	Operations Center
PPE	Personal Protective Equipment
QA	Quality Assurance
RCRA	Resource Conservation & Recovery Act
RCT	Radiation Control Technician
RLUOB	Radiological Laboratory/Utility/Office Building
RWP	Radiological Work Permit
TID	Tamper Indicating Device
TSD	Treatment Storage and Disposal
TSDF	Treatment Storage and Disposal Facility
TSRs	Technical Safety Requirements
WAC	Waste Acceptance Criteria
WAF	Waste Acceptance Form
WCO	Waste Certification Official
WMC	Waste Management Coordinator
WPC	Waste Package Certifier

9.0 RESPONSIBILITIES

9.1 PF-4/RLUOB Low Level Waste Operations Team

- Inspect, load, and verify waste, storage areas, and equipment, use two-man rule, conduct door openings, maintain training, report injuries, anomalies and unsafe conditions.

9.2 PF-4/RLUOB Waste Generators

- Responsible for ensuring hazardous materials and/or waste are managed according to TA55-RD-539.

9.3 PF-4/RLUOB Responsible Line Manager

- Responsible for ensuring personnel are properly trained, have appropriate equipment and PPE available.

9.4 PF-4/RLUOB RCT

- Responsible for surveys, Health Physics Radioactive Material Survey (HPRMS) tags, supports door openings.

10.0 REFERENCES

Document Number	Title
DOE/NV-325-Rev.9	Nevada Test Site Waste Acceptance Criteria
LA-UR-10-06688	Assessment of TA-55 Low-Level Radioactive Waste MAR and Proposed Methodology for Tracking.
Notice 0054	Reporting Injured, Trapped, or Abandoned Animals on LANL Property
Notice 0055	Black Bear and Mountain Lion Encounters
P101-18	Procedure for Pause/Stop Work
P930-1	LANL Waste Acceptance Criteria
FFS-DOP-002-FM1	Waste Acceptance Form
FFS-DOP-002-FM2	Waste Package Checklist
FFS-DOP-002-FM3	Inventory Checklist for LLW MAR Tracking
FFS-DOP-002-FM4	Weekly Inventory Form
FFS-DOP-002-FM5	Low Level Waste Green Is Clean Form (GIC)
FFS-DOP-002-FM6	Low Level Waste Room Trash Form
TA55-AP-138	Records Processing Procedure for ADPSM Organizations
PA-AP-01020	Pre-Job Briefing and Post-Job Review
TA55-DOP-016	TA55 Material Transfer Procedure
FFS-DOP-008	Forklift Operations at TA55
TA55-RD-539	TA-55 Waste Management Requirements
TA55-RD-555	TA-55 Radiation Protection Requirements
TA55-TSR-2011	TA-55 Technical Safety Requirements (TSRs)
PA-RD-01005, R0	RLUOB Facility Rad Protection Requirements
PA-PLAN-01041, R0	RLUOB Laboratory Area Access and Escort Procedure
PA-PLAN-01040, R0.1	RLUOB South Loading Dock Roll Door Access

11.0 RECORDS

Record Identification	Record Type Determination	Protection/Storage Methods	Processing Instructions
Attachment A, *Waste Package Checklist*	QA Record	Supervision shall implement a reasonable level of protection to prevent loss and degradation. Records shall be maintained in a metal file cabinet when not in use.	When the records are ready for final disposition, the record is transferred to Records Management and processed in accordance with TA55-AP-138.
Attachment B, *Inventory Checklist for LLW MAR Tracking*			
Attachment C, *RLUOB Inventory Checklist for LLW MAR Tracking*			
Attachment D, *Weekly Inventory Form*			

12.0 APPENDICES AND ATTACHMENTS

Attachment	Title
A	*Waste Package Checklist*
B	*PF-4 Basement/PAD Inventory Checklist for LLW MAR Tracking*
C	*RLUOB Inventory Checklist for LLW Mar Tracking*
D	*Weekly Inventory Form*
E	*PF-4 Low Level Waste Green Is Clean Form (GIC)*
F	*PF-4 Low Level Waste Room Trash Form*

Attachment A, Waste Package Checklist (UET)

☒ Use Every Time

Container ID: _____ Container Type: _____

This checklist is to be facilitate the assembly of the data package and ensure that all required information is collected. If and step(s) do not apply, indicate with N/A in the initials column.

Step	Activity	Initials/Date	
1	Visual inspection and container integrity has been performed.		
2	Tare Weight has been applied to the container. _____Kg		
3	Appropriate (for example: Hazardous, Non-Hazardous, GIC, Barcode and/or Radioactive) Labels have been applied to the container and two locks for drums or four locks for container (with different combinations) applied when not in use.		
4	Sealed container using current manufacturer's closure instructions that coincide with the Purchas Order Number on the container (bolts, torque, etc.).		
5	NTS Packaging Certification Signature_____ Date: _____		
6	Sealed date is marked on the container and TID applied TID No._____(see note below)		
7	Gross weight has been applied to the container _____Kg		
8	The HPRMS tag has been filled out and attached to the package.		
9	The container has been assayed by accountability group and has been reviewed for accountable material (NPI-1)		
10	Door opening scheduled and container moved to appropriate storage area. Date of DO _____		
11	TID and MC&A verification complete (S-Div)		
12	Collect data (MC&A results, Red Tag, Inventory sheets, WAF's) Enter Waste Information in Database		
13	Gamma Spectroscopy Data Analyses		
14	WAF's assay results, tags, and related documentation has been collected and checked for accuracy. An original WDR is generated and is attached to the data package. Completed package given to Operations Supervisor		
15	Operations Supervisor check for completeness then gives to QA		
16	QA reviews, and returns data package back to LLW personnel		
17	LLW personnel reviews and approve package then gives to WMC		
18	WMC final review and electronic WDR submitted, package given to LLW personnel by WMC Date Submitted: _____		

Comments

** After application of TIDs email custodian to terminate TID Numbers.

Attachment B, PF-4/PAD Inventory Checklist for LLW MAR Tracking (UET) Section 5.20

Inventory Checklist for LLW MAR Tracking

PF-4 Basement MAR Limit for ALL Waste (including TRU, LLW, and MLLW):	30 Kg Pu equivalent
PF-4 Basement Assumed MAR for LLW (including MLLW):	0.10 Kg Pu equivalent
[Does not include containers of Green is Clean waste as this waste is considered non-radioactive]	
Maximum allowable volume of LLW (including MLLW) in PF-4 basement:	**20 ST90 Waste Container Equivalents (1920 ft^3 or 54 m^3)**
OR	
Maximum allowable weight of low-level waste (including MLLW) in PF-4 basement:	**200,000 lbs (91,000 Kg)**
Waste Storage Pad Limit for ALL Waste (including TRU, LLW, and MLLW):	3.6 Kg Pu equivalent
Waste Storage Pad Assumed MAR for LLW (including MLLW):	0.50 Kg Pu equivalent
Maximum allowable volume of LLW (including MLLW) on pad:	**100 ST90 Waste Container Equivalents (9600 ft^3 or 270 m^3)**
OR	
Maximum allowable weight of low-level waste (including MLLW) on pad:	**1,000,000 lbs (455,000 Kg)**

Inventory Date: __mm__ / dd __ / yy	Name: _____	Signatures: _____

- [ ] PF-4 Basement
  - [ ] Volume
  - [ ] Weight
- [ ] Storage Pad
  - [x] Volume
  - [x] Weight

Container Type	No. In Storage	Maximum Container Volume (ft^3)	Maximum Container Weight (lbs)	Max Total Volume in Storage (ft^3)	Max Calculated Total Weight in Storage (lbs)	Measured Total Weight in Storage (lbs)
ST90		96	10,000	0	0	0
ST45		48	5,000	0	0	0
85-gal Drum		13.2	900	0	0	0
55-gal Drum		8.6	900	0	0	0
30-gal Drum		4.7	750	0	0	0
Other				0	0	
Total LLW In Storage				0	0	0
				PF-4 Must be <1920 ft^3	**PF-4 Must be <200,000 lbs**	**PF-4 Must be <200,000 lbs**
				Pad Must be <9600 ft^3	**Pad Must be <1,000,000 lbs**	**Pad Must be <1,000,000 lbs**

WARNING: If volume or weight exceed allowable limits, pause work, contact supervisor and operations center, wait for instructions.

Attachment C, RLUOB Inventory Checklist for LLW MAR Tracking (UET) Section 5.24

RLUOB Inventory Checklist for LLW MAR Tracking

RLUOB Assumed MAR for GIC and LLW (including MLLW): 0.5 g Pu equivalent

Maximum allowable volume of LLW (including MLLW) in RLUOB (RM 1124/1125) **10 ST90 Waste Container Equivalents (900 ft^3 or 25.48 m^3)**

OR

Maximum allowable weight of low-level waste (including MLLW) in RLUOB (RM 1124/1125): **100,000 lbs (45,359 Kg)**

Inventory
Date: ____/____/___ Name: _____ Signature: _____

☐ RLUOB RM 1124/1125
- ☐ Volume
- ☐ Weight

Container Type	No. In Storage	Maximum Container Volume (ft^3)	Maximum Container Weight (lbs)	Max Total Volume in Storage (ft^3)	Max Calculated Total Weight in Storage (lbs)	Measured Total Weight in Storage (lbs)
ST90		96	10,000	0	0	
ST45		48	5,000	0	0	
85-gal Drum		13.2	900	0	0	
55-gal Drum		8.6	900	0	0	
30-gal Drum		4.7	750	0	0	
Other				0	0	
			Total LLW In Storage	**0**	**0**	**0**
				RLUOB Must be <900 ft^3	**RLUOB Must be <100,000 lbs**	**RLUOB Must be <100,000 lbs**

WARNING: If volume or weight exceed allowable limits, pause work, contact supervisor and operations center, wait for instructions.

Attachment D, Weekly Inventory Form (UET)

Page 1 of 1

Weekly Inventory Form

NPI-7 LLW Date:_____

Container ID	Container Volume (ft^3)	Waste Description	LOC	Closed/ Sealed Date	PAD Storage Date	Residence Time	Shipment Destination	Ship Date	WDR Status	Container Wt. (KG) (Gross)

Attachment E, PF-4 Low Level Waste Green Is Clean Form (GIC)

CONTAINER ID_____ **START DATE**_____ **SEALED DATE**_____

GIC ID#	ROOM #	GIC ID #	ROOM #	GIC ID#	ROOM #	GIC #	ROOM #

Attachment F, PF-4 Low Level Waste Room Trash Form

CONTAINER ID_____ START/SEALED DATE_____

ROOM #	BOX COUNT	ROOM#	BOX COUNT	ROOM #	BOX COUNT	ROOM #	BOX COUNT
104		201		304		401	
105		201C		305		403	
106		201e		306		406	
107		202		309		407	
111		203		312		408	
113		204		316		409	
114		206		317		419	
115		207		319		420	
120		208		321		427	
123		209		322		429	
124		210		323		430	
125		211		324		433	
126		212		325		HALL 100	
128		213		326		HALL 200	
129		214		328		HALL 300	
130				329		HALL 400	
131				330		BASEMENT	
132				333		FILTERS	
133				341		32	
135				342		38	
				344		5	
						RCTs	

PMT2-DOP-CF-001, R1 Preparing Drum Assemblies for Cement Fixation

LA-UR-14-24679

Extended Until 6/24/15 per Memo MET-DO:13-08. Extension request was approved by Jeff Yarbrough on 06/24/13.

MET-1

Detailed Operating Procedure

Approval Cover Sheet

Document number: PMT2-DOP-CF-001, R1

Effective date: 10/12/11

Next review date: 10/12/13

Supersedes: N/A

Title: Preparing Drum Assemblies for Cement Fixation

Status:	Hazard:	For Document Control Use Only:
☐ New	☐ Low-hazard	
☒ Major revision	☒ Moderate-hazard	
☐ Minor revision	☐ High-hazard/complex	
☐ Review, no change	**Use Type:**	
	☒ Reference ☐ Use every Time	
	☐ WR (Use every Time)	

	Organization	Date	Signature
Approved for Use By:			
Operations: Georgette Ayers	NCO-2	10/5/11	SIGNATURE ON FILE
Authorized for Use By:			
Operations Responsible Line Manager: Thomas Ricketts	NCO-2	10/5/11	SIGNATURE ON FILE
Authorized for Use By:			
FOD/Operations Manager: Chuck Tesch	TA55-OPS	10/12/11	SIGNATURE ON FILE

Approved by:

	Organization	Date	Signature
Approved for Use By:			
SME/Engineer: Gerald Veazey	MET-1	10/6/11	SIGNATURE ON FILE
Authorized for Use By:			
Group Leader: Kent Abney	MET-1	10/7/11	SIGNATURE ON FILE

Approved by:

Design Agency Liaison:	***Date***	***Process Owner:***	***Date***
N/A		***N/A***	
Quality Assurance:	***Date***	***SME:***	***Date***
Joseph Fresquez		***N/A***	

☒ Unclassified	☐ Restricted Data	**Derivative Classifier:**
☐ Confidential	☐ Formerly Restricted Data	**Name: Darren Quintana**
☐ Secret	☐ National Security Information	**Title: MET-1** **Date: 10-6-11**
☐ Unclassified Controlled Nuclear Information		
☐ Official Use Only		**Derived from: CG-SS-4 9/2000**

Revision History

Document Number	Effective Date	Action	Description
PMT2-DOP-CF-001, R1	10/12/11	Major Revision	• Changed drum manufacturer. • Changed torque requirements for plug sizes. • Replaced WMS with WCATS. • Changed WES-FFS to Waste Services.
PMT2-DOP-CF-001, R0	12-11-2008	New	• Reformatted to IMP 300. • Supersedes: NMT2-WI-009-CF-901,R3 and NMT2-IWD-WI-009-CF-901,R3

Table of Contents

1.0 INTRODUCTION 5

1.1 Purpose 5
1.2 Scope and Applicability 5
1.3 Applicability 5
1.4 Technical Safety Requirements 5

2.0 PRECAUTIONS AND LIMITATIONS 6

2.1 General 6
2.2 Additional Requirements and Conditions (WR Use) 8

3.0 PREREQUISITE ACTION 8

3.1 Planning and Coordination 8
3.2 Performance Documents 8
3.3 Special Tools, Equipment, Parts, and Supplies 9
3.4 Field Preparation 9
3.5 Approvals and Notifications 10

4.0 ACCEPTANCE CRITERIA 10

5.0 PERFORMANCE 11

5.1 Inspection and Logging the Drum 11
5.2 Installing the Lid Components 12
5.3 Applying Bar Codes 13
5.4 Marking the Liner and Attaching the Bag Skirt 14
5.5 Installing the Bag on the Liner 16
5.6 Moving Drum Assemblies into PF-4 18

6.0 POST-PERFORMANCE ACTIVITIES 20

6.1 Testing 20
6.2 Restoration 20
6.3 Results 20
6.4 Independent Verification 20
6.5 Records Processing 20

7.0 EMERGENCY ACTIONS 20

8.0 DEFINITIONS AND ACRONYMS 21

9.0 RESPONSIBILITIES 21

9.1 Waste Services 21
9.2 Quality Assurance 21

10.0 REFERENCES 22

11.0 RECORDS 22

Table of Contents (continued)

12.0 APPENDICES AND ATTACHMENTS 22

Appendix A, Fitting Installations for UN, Type A, 55-gallon Drums 23
Attachment A, Drum Label Placement 24
Attachment B, Performance Checklist 25

1.0 INTRODUCTION

1.1 Purpose

This Detailed Operating Procedure (DOP) identifies how to inspect and prepare 55-gallon drums to be used for immobilizing transuranic (TRU) waste in cement, and after preparation, how to transport the drum assemblies into room 401 through an authorized 300/400 wing corridor door opening.

1.2 Scope and Applicability

This drum preparation section of this procedure is performed by PMT-2 personnel assigned to the Cement Fixation (CF) process in PF-185 at TA-55. It may also be performed by other personnel under the direction of certified CF personnel and in other locations.

1.3 Applicability

[1] This procedure is intended to produce a cemented waste form that complies with the Waste Isolation Pilot Plant (WIPP) Waste Acceptance Criteria as defined in *Transuranic Waste Acceptance Criteria for the Waste Isolation Pilot Plant*, DOE/WIPP-02-3122, for contact-handled TRU waste.

[2] The CF process and this procedure are subject to the quality assurance program plan specified in TA55-PLAN-046, *Quality Management Plan (QMP)* and 10 CFR 830, *Nuclear Safety Management Quality Assurance.*

[3] This procedure is subject to the Central Characterization Project (CCP) procedure CCP-QP-016, *CCP Control of Measuring, Testing, and Data Collection Equipment*.

[4] To prevent damage to the drum package due to a drop during transport, cement drums are produced to meet the Type A DOT container testing criteria in 49 CFR 173.465.

1.4 Technical Safety Requirements

Not Applicable

2.0 PRECAUTIONS AND LIMITATIONS

2.1 General

A. Pause/Stop Work

All workers are responsible for pausing or stopping work when they have a reasonable belief that quality, work risks or hazards are not effectively controlled and workers have the right to do so without fear of reprisal. LANL Policy P101-18 provides more information on the differences between pausing or stopping work and the process for resuming work in either case.

B. Hazards and Controls

Hazard	Controls
Manual lifting: The drum preparation process includes manually moving and lifting equipment or materials weighing over 75 pounds. The risk of back strains, pinches, contusions, and possibly more serious injuries is significant. Bodily injury may occur if these items are dropped.	• Use two people and proper lifting techniques to lift the liner-bag assembly into the drum. • Move drums assemblies by tipping and rolling them. A hand dolly or forklift with the drum handler attachment may also be used to move drums. • To avoid back strain, use caution when moving drums. • Wear hard-toed shoes. • Before carrying a heavy object, check the route to ensure that obstructions and slip and trip hazards are removed. If clearance is not adequate, choose an alternate route.
Rodents: Rodent-infested means that evidence of rodents is present (rodents, droppings, or nibbled food). This also applies to areas where rodents have been seen in the past, even if evidence of rodents is not currently present.	• Avoid contact with live or dead animals and animal waste. • Contact Pest Control (667-6111) to mitigate any pest concerns.

C. Unique Entry Conditions

Not Applicable

D. Sequence of Steps

The steps and Sections in the Performance Section are to be performed in sequence unless otherwise stated.

E. Criticality Safety Limit Approval (CSLA) Requirements

Not Applicable

F. Required Permits

Not Applicable

G. Training and/or Qualifications

Operators must be qualified to this procedure or in supervised qualification on this procedure. Operator qualification is documented on Attachment B, *Performance Checklist*.

2.1 General (continued)

H. Cautions

Not Applicable

I. Material Control and Accountability

Not Applicable

2.2 Additional Requirements and Conditions (WR Use)

Not Applicable

3.0 PREREQUISITE ACTION

3.1 Planning and Coordination

[1] Ensure that a pre-job brief has been conducted in accordance with TA55-DOP-001, *Pre-Job Briefing and Post Job Review*.

[2] No technical Safety Requirement (TSR) or In-Service Inspection (ISI) surveillances are performed in this procedure.

[3] Ensure the work is scheduled on the TA55 Integrated Plan of the Day (IPOD).

[4] Ensure that tool, equipment, and material numbers in the work area match those specified.

[5] The purchase order #, lot # and serial # under which the drums were procured and the year of manufacture is required to certify the drums on the Waste Compliance and Tracking System (WCATS). This information is printed on the drum.

3.2 Performance Documents

- TA55-AP-547, *Opening and Closing of the External Security Doors and Confinement Doors in PF-4*

3.3 Special Tools, Equipment, Parts, and Supplies

- 55-gallon drum, UN/1A2, with lid, ring, and bolt
- bar code labels
- drum-out bag (ex. LANL-BAG-3-SPVC or equiv.), filtered, 12 mil-thick, 26 in. across, 96 in. long.
- vinyl bag skirt, 26-in. across, ~20 in. long
- air blower to leak test bag
- carbon composite filter (NucFil-019DS with 3/4" – 14 NPS threads)
- cap for 2-inch bung
- 125-mil thick rigid plastic drum liner
- yellow vinyl tape
- liner calibration template tool
- 1 ½ in. socket for torque wrench
- 15/16 in. open end wrench
- 15/16 in. socket for torque wrench
- hand dolly
- permanent black marker
- mallet
- torque wrench with current calibration by the Standards and Calibrations Lab
- retaining strip, 67-1/2 in. long
- crimping tool for bung hole cap
- forklift with drum handler
- cleaning solution and wipes if cleaning is needed
- Loctite

3.4 Field Preparation

[1] Obtain a sheet of identification bar code labels that all have the same number. These can be obtained from Waste Services at TA-55.

[2] Obtain all other drum assembly components and tools to assemble the components as listed above in Section 3.3, *Special Tools, Equipment, Parts, and Supplies*.

[3] Perform the following notifications prior to performing the door opening in Section 5.6:

[a] Schedule the door opening on the TA-55 Integrated Plan of the Day (IPOD) at least 1 day prior to needing it in order to have RCT coverage.

[b] Notify the OC approximately one hour prior to needing the door opening so they can arrange for the security force to open the door.

[4] Prior to using the forklift to move drums in Section 5.6, inspect the forklift for proper condition using Forklift Operator's Daily Inspection Form or equivalent (ex., TA55-WI-002-FM2, *Inspection Checklist for Forklifts and Electrical-Powered Industrial Trucks*).

3.5 Approvals and Notifications

Not Applicable

4.0 ACCEPTANCE CRITERIA

The drum assembly is composed of the 55-gal drum, inner rigid plastic liner, bag-out bag, bag skirt and skirt retaining strip. The finished assembly must conform to the configuration described in this DOP.A quality assurance inspection is performed by QA-IQ prior to receipt of the drums.

5.0 PERFORMANCE

5.1 Inspection and Logging the Drum

WARNING

Hazard: **Handling materials - Improper handling of drums can cause pinched or crushed fingers, broken bones if the drum falls on you, and strained back muscles and injured discs if drums are not moved properly.**

Control: **Handle drums with caution, using the equipment specified in the procedure as needed or the tip and roll technique.**

[1] Obtain a UN/1A2 type A 55-gallon steel drum from the drum storage area.

[2] Inspect drum for the following damage:

- dents
- chips in the paint
- gouges
- damage to top lip of the drum (chime)
- damage to the lid and gasket
- damage to the lid ring, bolt or nut

[3] IF the drum is defective,
THEN reject it by marking the damaged area with a 3-in.-high "X" using a black permanent marker.

[4] IF any part of the drum other than the drum itself is defective (such as the lid, rim, or bolt),
THEN contact QA for guidance on replacing the defective part with a part from another inspected and approved drum from the same lot and purchase order only.

NOTE 1 Performance of Step 5.1[5] may be performed at a later time.

NOTE 2 Information needed for entering data in WCATS is printed on the drum and filter.

[5] Enter the following data in WCATS via the mobile hand-held device:

- certification date
- year of manufacture
- container type
- purchase order #
- Lot #
- Serial #
- carbon filter type, serial # and date of manufacture

5.2 Installing the Lid Components

WARNING

Hazard: **Use of hand tools - A torque wrench is used to tighten the bung-hole caps in the drum lid. Improper use of hand tools can result in injury.**

Control: **Inspect tools to ensure they are in good condition and maintain them so. Use the tool in accordance with the manufacturer's operating rules or safe practices.**
Use Caution

[1] Verify that the torque wrench is within its calibration date.

[2] Remove the small bung-hole cap on the lid AND discard.

[3] Obtain a carbon composite filter (NucFil-019DS with 3/4" – 14 NPS threads)

[4] IF the carbon composite filter comes with a flat gasket,
THEN discard the flat gasket,
AND replace with an o-ring gasket.

[5] Apply Loctite to the threads of the filter.

[6] Replace the small bung hole cap with the carbon composite filter fitted with an o-ring gasket.

[7] Using the calibrated torque wrench fitted with the 15/16-in socket,
tighten the carbon filter to the specified torque (see Appendix A, *Fitting Installations for UN, Type A, 55-gallon Drums)*.

[8] Remove the 2-in. bung plug from the drum lid.

[9] Inspect the gasket for wear,
AND replace any faulty gasket.

[10] Install the 2-in. bung plug in the 2-in. bung hole.

[11] Using the calibrated torque wrench with the 1 1/2–inch socket,
tighten the bung-hole plug to its specified torque (see Appendix A, *Fitting Installations for UN, Type A, 55-gallon Drums)*.

[12] Place a cap over the large bung hole,
AND use the crimping tool to crimp the cap in place.

5.3 Applying Bar Codes

NOTE Attachment A, *Drum Label Placement*, provides written instructions and a graphic depiction of the proper placement of the five large drum labels.

[1] Obtain a sheet of identification bar code labels, that all have the same number, from Waste Services at TA-55.

[2] If necessary, clean the label placement areas on the drum, as shown in the diagram in Attachment A, *Drum Label Placement*.

[3] Apply five large labels to the drum in accordance with Attachment A, *Drum Label Placement*.

5.4 Marking the Liner and Attaching the Bag Skirt

WARNING

Hazard: **Ergonomic - Marking the inside of the drum liner involves bending over at an awkward angle, thus creating a potential ergonomic hazard.**

Control: **Use care to support body weight properly during this task. Performing this task while sitting down and tilting the liner toward you reduces the ergonomic hazard.**

NOTE 1 The maximum fill line for cement is 3 inches below the lip of the liner.

NOTE 2 The volume at 16 inches from the bottom is ~99 liters and each vertical inch equals 6 liters.

[1] Using a permanent black marker and the liner calibration template tool, mark the inside of the liner at the maximum fill volume (3 inches down), and at 1-in. increments.

NOTE The purpose of the bag skirt is two-fold:

- To keep the splatter of cement paste off the bagout bag so that when the bagout bag is cut during the drum-out process in PMT2-DOP-CF-002, *Drum-in/Drum-out Operations for Cement Fixation*, no cemented waste particulate is present on the bag to increase contamination release during drum-out.
- To keep the glovebox negativity from pulling in the bagout bag too much for adequate access to the drum.

[2] Perform the following to install the bag skirt on the liner:

CAUTION

Leaving an excessive amount of skirt on the inside of the liner under the retaining strip can result in not having adequate skirt length with which to attach to the drum to the glovebox drum port in PMT2-DOP-CF-002, *Drum-in/Drum-out Operations for Cement Fixation.*

[a] Pull the skirt's elastic cord down around the outside of the liner to the extent that the other end of the skirt hangs over the inside of the lip by about ½ – 1 inch, or enough to be caught by the retainer strip.

5.4 Marking the Liner and Attaching the Bag Skirt (continued)

WARNING

Hazard: **Sharp objects: Sharp edges that can cut the skin and bag may exist on the retaining strip.**

Control: **Use caution to avoid contacting the sharp edges of the retaining strip.**

Wear heavy work gloves to perform this procedure.

Trim off protruding sharp edges.

[b] Start pushing the retainer strip down over the edge of the liner, catching the bag skirt between the liner and the retainer strip.

[c] Continue installing the retainer strip around the circumference of the liner, folding the excess bag material in several places.

WARNING

Hazard: **Use of hand tools: A mallet is used to install the bag to the liner with the retaining strip. Misuse can result in injury from inadvertent contact with the body.**

Control: **Avoid hitting hand when using the mallet to install the retaining strip.**

[d] Using a mallet,
hammer the retainer strip completely down over the lip of the liner to secure the bag skirt between it and the liner.

[e] Trim off any excess retainer strip so that the ends of the strip do not overlap where they meet.

[f] Pull up the end of the skirt having the elastic cord,
AND fold that end into the liner.

[g] Using two layers of tape,
tape the folded-over edge of the bag skirt to the liner around the outside circumference of the liner.

5.5 Installing the Bag on the Liner

WARNING 1

Hazard: **Use of power tools - An air blower or compressed air line is used to partially inflate the bag to test for leaks. Faulty equipment or improper use can result in injury.**

Control: **Inspect tools to ensure that they are in good condition, and maintain them in good condition.**
Use the tool in accordance with the manufacturer's operating rules or safe practices.
Wear personal protective equipment (PPE) as needed.
Use caution.

WARNING 2

Hazard: **Noise: Use of the air blower or compressed air can result in elevated noise levels.**

Control: **Wear hearing protection as needed.**

NOTE A leaf blower may be used to test the drum-out bag for leaks.

[1] Test the drum-out bag for leaks by trapping air inside the bag.

- **[a]** IF any leaks are found,
  THEN discard the drum-out bag.
- **[b]** Obtain another drum-out bag,
  AND repeat Step 5.5[1].

[2] Place the liner inside the leak-tested drum-out bag.

[3] Pull the drum-out bag up so that the liner is at the bottom and center of the bag.

[4] Tighten the bag on the liner by making two 3-inch folds on opposite sides of the bag from the two bottom corners of the bag up to the top of the liner.

[5] Use yellow vinyl tape to secure the bag to the liner as follows:

- **[a]** Place 3 roughly equally spaced strips of tape perpendicular to each fold line.
- **[b]** Starting at the top of the liner, apply tape down one fold, pinning down the corners of the bag, and up the fold on the opposite side to the top of the liner.
- **[c]** Apply tape where necessary to tape flat all excess bag on the bottom.
- **[d]** Apply tape around the circumference of the bag along the bottom edge of the liner.
- **[e]** Apply vinyl tape around the circumference of the bag at the top edge of the liner.

5.5 Installing the Bag on the Liner (continued)

[6] Have an inspected empty drum in the drum assembly work place.

[7] Place the liner/bag assembly in the drum and push it to the bottom of the drum.

[8] Place the drum lid on the drum,
AND install the drum lid ring assembly with the bolt holes pointing downward.

[9] Thread the ring bolt into both bolt holes,
AND tighten the ring nut with the 15/16 in. open end wrench.

5.6 Moving Drum Assemblies into PF-4

NOTE The procedure for conducting a corridor door opening is detailed in *TA55-AP-547, Opening and Closing of the External Security Doors and Confinement Doors in PF-4*. The CF worker supervising the door opening must be certified to that procedure and be on the door opening authorization list kept in the OC.

[1] Perform the following notifications prior to performing the door opening:

[a] At least 1 day prior to needing the door opened, schedule the door opening on the Integrated Plan of the Day (IPOD), in order to have RCT coverage.

[b] Notify the OC approximately one hour prior to needing the door opening so that the OC can arrange for the door opening with security force.

WARNING

Hazard: Forklift operation:

- **A forklift or motorized hand truck may be used to transport drum assemblies over a rough surface and in a limited space with reduced visibility.**
- **A drum handling attachment is used, which reduces its rated weight capacity.**

Control:

- **Operator training and certification on the forklift or other motorized conveyance.**
- **Use of a spotter to observe and control operations.**
- **Forklift operators are trained and certified to Plan 9418, PMT-2 Forklift Operator.**
- **Forklift operators must perform a daily inspection, verifying that the forklift is in proper working order, and document the results on the appropriate inspection form.**
- **When the drum attachment is used with the motorized hand truck, capacity is reduced to 1000 pounds, and the lifting height at 850 pounds can be no more than 24 inches.**

[2] Prior to using the forklift to move drums, inspect the forklift for proper condition using Forklift Operator's Daily Inspection Form or equivalent (ex., TA55-WI-002-FM2, *Inspection Checklist for Forklifts and Electrical-Powered Industrial Trucks*).

5.6 Moving Drum Assemblies into PF-4 (continued)

[3] Prior to the corridor door being opened, use a forklift to move each drum assembly to the loading dock outside the PF-4 corridor door.

[4] Notify the OC that the corridor door is about to be opened by the security force personnel.

[5] Have the security force personnel open the corridor door.

WARNING

Hazard: Manual lifting: The drum assemblies weigh over 60 pounds each. The risk of back strains, pinches, contusions, and possibly more serious injuries can occur.

Control:

- **Avoid lifting the drum assemblies to move them. Move the drum assemblies by tipping and rolling them or by using a moving device such as a dolly.**
- **Use two people when needed.**
- **Use caution.**
- **Wear hard-toed shoes.**
- **Before carrying a heavy object, the route is to be checked to ensure that obstructions and slip and trip hazards are removed. If clearance is not adequate, an alternate route is to be chosen.**

[6] Move each drum through the door and into the corridor.

[7] WHEN all drums have been moved into the corridor,
THEN have the corridor door closed.

[8] Notify the OC when the door closing is complete.

[9] Move the drums into room 401 and store in the assigned floor location until needed for attachment to the CF glovebox per PMT2-DOP-CF-002, *Drum-in/Drum-out Operations for Cement Fixation*.

6.0 POST-PERFORMANCE ACTIVITIES

6.1 Testing

Not Applicable

6.2 Restoration

Not Applicable

6.3 Results

[1] Drum, torque wrench and carbon filter information is recorded into WCATS via the hand held WCATS unit.

6.4 Independent Verification

Not Applicable

6.5 Records Processing

Not Applicable

7.0 EMERGENCY ACTIONS

Not Applicable

8.0 DEFINITIONS AND ACRONYMS

Term	Definition
CCP	Central Characterization Project
CF	Cement Fixation
DOP	Detailed Operating Procedure
DOT	Department of Transportation
FOD	Facility Operations Director
ISI	In-Service Inspection
NMHWA	New Mexico Hazardous Waste Act
OC	Operations Center
PPE	Personal Protective Equipment
IPOD	Integrated Plan Of The Day
QA	Quality Assurance
QA-IQ	Quality Assurance – Institutional Quality
RCT	Radiological Control Technician
TRU	transuranic
TSR	Technical Safety Requirement
UN	United Nations Number
WIPP	Waste Isolation Pilot Plant
WCATS	Waste Compliance and Tracking System

9.0 RESPONSIBILITIES

9.1 Waste Services

- Responsible for supplying the QA inspected empty 55-gal drums, rigid liners and bar code labels.

9.2 Quality Assurance

- Responsible for ensuring the drums and rigid liners meet specifications required in this DOP.

10.0 REFERENCES

Document Number	Title
10 CFR 830	*Nuclear Safety Management Quality Assurance*
49 CFR 173.465	*Transportation - Type A Packaging Tests*
DOE/WIPP-02-3122	*Transuranic Waste Acceptance Criteria for the Waste Isolation Pilot Plant*
LANL P101-18	*Procedure for Pause/Stop Work*
TA55-PLAN-046	*Quality Management Plan (QMP)*
PMT2-DOP-CF-002	*Drum-in/Drum-out Operations for Cement Fixation*
TA55-DOP-547	*Opening and Closing of the External Security Doors and Confinement Doors in PF-4*
TA55-DOP-001	*Pre-Job Briefing and Post-Job Review*
TA55-WI-002-FM2	*Inspection Checklist for Forklifts and Electrical-Powered Industrial Trucks*
Plan 9418	*PMT-2 Forklift Operator*

11.0 RECORDS

Record Identification	Record Type Determination	Protection/Storage Methods	Processing Instructions
Attachment B, *Performance Checklist*	Training Record	Maintain in training file	Record shall be maintained by the Training Coordinator upon completion of training and qualification. When no longer in use transfer to the DCC for archiving.

12.0 APPENDICES AND ATTACHMENTS

Appendix	Title
A	*Fitting Installations for UN, Type A, 55-gallon Drums*
Attachment	**Title**
A	*Drum Label Placement*
B	*Performance Checklist*

Appendix A,
Fitting Installations for UN, Type A, 55-gallon Drums

CAUTION

In order for the Type A, 55-gal drum to safely perform to its rated ability, the installation of the drum lid ring and bung hole fittings need to be strictly adhered to. Any other method of assembly, or the use of any drum components (rings, gaskets, or fittings) that are not specified in this design type, will immediately invalidate the UN and DOT performance rating of the drum.

The table below shows the proper torque that must be applied to each drum fitting to assure proper container performance.

Plug Torque Setting

Drums are typically procured from Skolnik Industries. However, other drum manufacturers may be used. The specifications below are approved for Skolnik drums, but others manufacturers may be different. Always refer to purchase order and data package to insure use of actual manufacturer's current closure instructions.

	Type II-Reike VGII Serrated Base, Hexagon Head Plug		
	Steel Plugs		*Poly Plugs*
Plug Size	**Rubber Gasket**	**Poly Gasket**	
2-in.	30 ft-lbs	40 ft-lbs	20 ft-lbs

Filter Torque Setting

The specifications below are approved for NucFil-019DS Filter with 3/4" – 14 NPS Threads manufactured by Nuclear Filter Technology. However, filters from other manufacturers and other filters from Nuclear Filter Technology may be different. Always refer to purchase order and data package to insure use of actual manufacturer's current closure instructions.

	NucFil-019DS Filter with ¾"-14 NPS Threads
Plug Size	**Payload <900 lbs.**
3/4-in.	10 ft-lbs 120 in-lbs

Attachment A,
Drum Label Placement

Following the diagram and instructions below, apply five large labels to the drum:

- Apply three large identification bar code labels around the circumference of the drum, evenly spaced, about 4 in. (but not more than 6 in.) above the bottom rim, with one label being immediately to the left of the drum seam.

CAUTION

When applying the label between the top two rolling hoops, the manufacturer's information is NOT to be covered by the label.

- Apply one large label between the top two rolling hoops, immediately to the right of the drum seam.
- Place one large label on the top center of the drum lid.

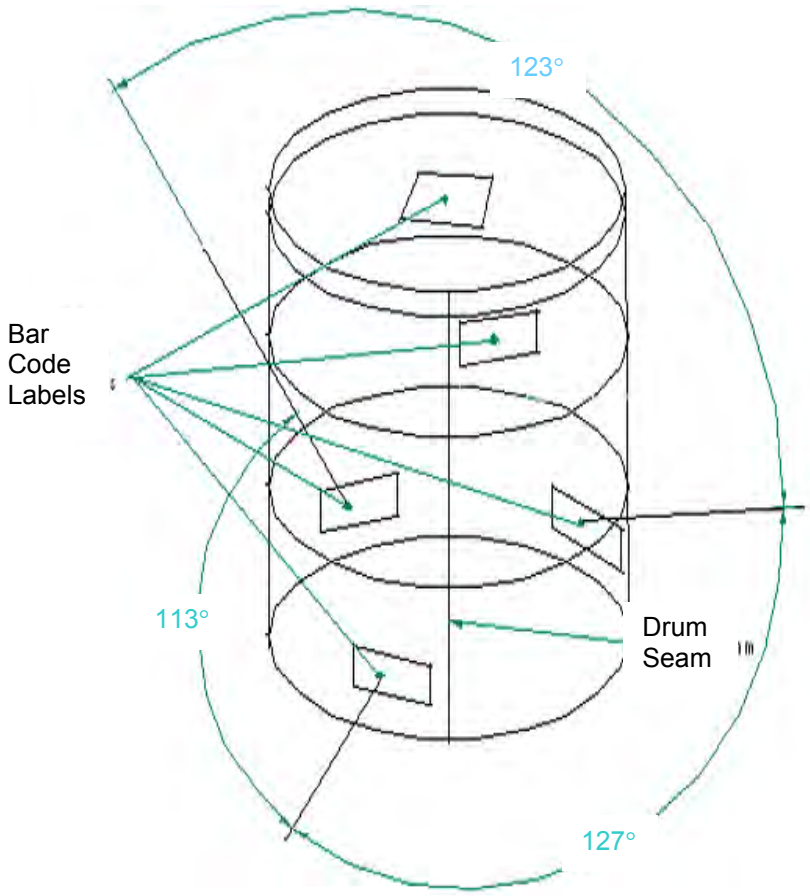

Attachment B, Performance Checklist

Procedure Number: PMT2-DOP-CF-001, R1 Title: *Preparing Drum Assemblies for Cement Fixation*

Task Hazard Level ☐ Minimal ☐ Low ☒ Medium ☐ High ☐ Mission-critical

Worker's Name: _____ Z number _____

☐ Worker has completed the following training prerequisites _____
(Verifiers name and Z number)

Task #	Qualification Requirements	Instruction	Evaluation
	Emergency Actions		
1	Describe what actions to take in an emergency.	☐	☐
	Comments:		
	Hazards and Controls		
1	Describe the actions to take if a rodent or evidence of a rodent is detected.	☐	☐
2	Describe how a properly constructed drum assembly protects workers from radiological contamination hazards during subsequent use.	☐	☐
3	Describe the lifting limits and controls associated with this work instruction.	☐	☐
4	Describe the hazards and controls associated with the retainer strip.	☐	☐
5	Describe ergonomic hazards and controls.	☐	☐
6	Describe the hazards and controls for forklift operation.	☐	☐
7	Describe the hazards and controls for hand tools.	☐	☐
8	Describe the hazards and controls for noise.	☐	☐
	Comments:		

Attachment B,
Performance Checklist

Task #	Qualification Requirements	Instruction	Evaluation
	Procedural Steps		
1	Demonstrate and/or discuss how to inspect the drum.	☐	☐
2	Demonstrate and/or discuss how to place the bar code label.	☐	☐
3	Demonstrate and/or discuss how to prepare the liner when preparing the drum.	☐	☐
4	Demonstrate and/or discuss how to install the bag and liner when preparing the drum.	☐	☐
5	Demonstrate and/or discuss the torque requirements for the carbon filter and the bung hole plug.	☐	☐
	Comments:		

Signature Approvals

Worker's Name (Last, First, Middle Init.)	**Signature**	**Z #**	**Group**	**Date**

(Your signature indicates that you are confident to safely and independently perform work relative to this procedure.)

Instructor's Name (Last, First, Middle Init.)	**Signature**	**Z #**	**Group**	**Date**

(Your signature indicates that you are confident that the worker indicated above is adequately prepared for a performance evaluation.)

Evaluator's Name (Last, First, Middle Init.)	**Signature**	**Z #**	**Group**	**Date**

(Your signature indicates that you are confident that the worker indicated above has been adequately trained to safely and independently perform work relative to this procedure.)

PMT2-DOP-CF-002, R3 Drum-in/Drum-out Operations for Cement

LA-UR-14-24704

Extended Until 6/24/15 per Memo MET-DO:13-08. Extension request was approved by Jeff Yarbrough on 06/24/13.

MET-1

Detailed Operating Procedure

Approval Cover Sheet

Document number: PMT2-DOP-CF-002,R3

Effective date: 06/08/12

Next review date: 06/08/14

Supersedes:

Title: Drum-in/Drum-out Operations in Cement Fixation

Status:	Hazard:	For Document Control Use Only:
☐ New	☐ Low-hazard	
☒ Major revision	☒ Moderate-hazard	
☐ Minor revision	☐ High-hazard/complex	
☐ Review, no change	**Use Type:**	
	☒ Reference ☐ Use every Time	
	☐ WR (Use every Time)	

	Organization	Date	Signature
Approved for Use By:			
Operations: Georgette Ayers	NCO-2	4/10/12	SIGNATURE ON FILE
Authorized for Use By:			
Operations Responsible Line Manager: Thomas Ricketts	NCO-2	4/10/12	SIGNATURE ON FILE
Authorized for Use By:			
FOD/Operations Manager: Chuck Tesch	TA55-OPS	4/12/12	SIGNATURE ON FILE

Approved by:

	Organization	Date	Signature
Approved for Use By:			
SME/Engineer: Gerald Veazey	MET-1	4/11/12	SIGNATURE ON FILE
Authorized for Use By:			
Group Leader: Kent Abney	MET-1	4/11/12	SIGNATURE ON FILE

Approved by:

Design Agency Liaison: ***Date***	***Process Owner:*** ***Date***
Quality Assurance: ***Date***	***SME:*** ***Date***

☒ Unclassified ☐ Restricted Data	**Derivative Classifier:**
☐ Confidential ☐ Formerly Restricted Data	**Name:** SIGNATURE ON FILE
☐ Secret ☐ National Security Information	**Title:** SCIENTIST 3 **Date:** 4/11/12
☐ Unclassified Controlled Nuclear Information	
☐ Official Use Only	**Derived from: N/A**

Revision History

Document Number	Effective Date	Action	Description
PMT2-DOP-CF-002,R3	06/08/12	Major Revision	• Revised the TSR controls to comply with the 2011 TSRs.
PMT2-DOP-CF-002,R2	10/24/11	Major Revision	• Changed accumulation start date from "cemented" to "drummed out" in step 5.5[1][a]2.
PMT2-DOP-CF-002,R1	5/23/11	Major Revision	• Incorporated IPC modifications from previous document concerning TSR 6.2.5 ISI 5. • Reformatted to latest DOP template format. • Replaced MASS with LANMAS and WMS with WCATS. • Removed attachments on MASS instructions, PAFD and CSLA. • Added use of TA55-DOP-016 to confirm MAR is within limits. • Supersedes PMT2-DOP-CF-008,R0-IPC-2. • Added TSR concerning WES-FFS confirming WIPP-approved drum and fitting. • Modified drum and drum fitting torqueing instructions in attachment.
PMT2-DOP-009-CF-002,R0		New	• Reformatted to IMP 300. • Incorporated FOD safety recommendations. • Supersedes NMT2-WI-009-CF-902,R3 and NMT2-IWD-WI-009-CF-902,R3.
NMT2-WI-009-CF-902,R3	03/19/07	Revised	• Removed steps, hazards and controls associated with internal lead shielding. • Added steps, hazards and controls associated with temporary shielding. • Changed drum weight to reflect no internal lead shielding. • Updated acronyms and reference list.
NMT2-WI-009-CF-902,R2	08/25/2006	Revision	• Added hazards and controls for hazardous materials, ergonomics, manual lifting, mechanical hazards, and radiological contamination. • Added definitions of WMS and TSD. • Revised steps in Sections 5.4 and 5.5. • Updated group names.

Table of Contents

1.0 INTRODUCTION 4
1.1 Purpose 4
1.2 Scope 4
1.3 Applicability 4
1.4 Technical Safety Requirements 5
2.0 PRECAUTIONS AND LIMITATIONS 5
2.1 General 5
2.2 Additional Requirements and Conditions (WR Use) 10
3.0 PREREQUISITE ACTION 10
3.1 Planning and Coordination 10
3.2 Performance Documents 11
3.3 Special Tools, Equipment, Parts, and Supplies 11
3.4 Field Preparation 11
3.5 Approvals and Notifications 11
4.0 ACCEPTANCE CRITERIA 11
5.0 PERFORMANCE 12
5.1 Inspecting the Cement 12
5.2 Performing the Drum-out 13
5.3 Attaching the Drum (Drum-in) 17
5.4 Closing the Cemented Drum 20
5.5 Drum Labeling and Recording Drum Information 22
5.6 Moving the Drum 23
6.0 POST-PERFORMANCE ACTIVITIES 26
6.1 Testing 26
6.2 Restoration 26
6.3 Results 26
6.4 Independent Verification 26
6.5 Records Processing 26
7.0 EMERGENCY ACTIONS 26
8.0 DEFINITIONS AND ACRONYMS 27
9.0 RESPONSIBILITIES 28
9.1 Waste Services 28
9.2 Radiation Protection Technician 28
9.3 MBA Custodian for B-35 28
10.0 REFERENCES 29
11.0 RECORDS 30
12.0 APPENDICES AND ATTACHMENTS 30
Appendix A, Fitting Installations for UN, Type A, 55-gallon Drums 31
Attachment A, Performance Checklist 32

1.0 INTRODUCTION

1.1 Purpose

This Detailed Operating Procedure (DOP) identifies how to inspect the cemented waste, remove a drum of cemented waste from the Cement Fixation (CF) glovebox (GB) (drum-out), and attach an empty drum assembly (drum-in). The cemented waste drum is closed out on the Waste Compliance and Tracking System (WCATS) after drum-out.

1.2 Scope

This DOP is performed at TA-55 in Room 401, locations CF and FLO1 by NCO-2 personnel assigned to the CF process.

1.3 Applicability

[1] This procedure is intended to produce a cemented waste form that complies with the Waste Isolation Pilot Plant (WIPP) Waste Acceptance Criteria as defined in *Transuranic Waste Acceptance Criteria for the Waste Isolation Pilot Plant*, DOE/WIPP-02-3122, for contact-handled TRU waste.

[2] The CF process and this procedure are subject to the quality assurance program plan specified in TA55-PLAN-046, *Quality Management Plan (QMP)* and 10 CFR 830, *Nuclear Safety Management Quality Assurance.*

[3] This procedure is subject to the Central Characterization Project (CCP) procedure CCP-QP-016, *CCP Control of Measuring, Testing, and Data Collection Equipment*.

[4] This procedure is intended to produce a cemented waste form that meets the Resource Conservation and Recovery Act (RCRA), definition of a non-mixed waste as defined 40 CFR, Parts 260 through 273, *Solid Waste*, as amended by the Hazardous and Solid Waste Amendments (HSWA). Hazardous waste regulation and enforcement in New Mexico is performed by the New Mexico Environmental Department (NMED) under 20 NMAC 4, New Mexico Hazardous Waste Act.

[5] The process of pH adjusting the waste neutralizes RCRA-corrosive materials and renders them non-corrosive. In addition, cement fixation is designed to sufficiently bind the RCRA-toxic metals to meet Toxicity Characteristic Leaching Procedure (TCLP) standards for non-mixed waste. Cemented waste forms that do not meet the TCLP for any RCRA-toxic metal are considered mixed waste and must be labeled according to Section 5.5 of this DOP. To determine if the cemented waste drum is mixed waste, the following is used:

- Code of Federal Regulations, 40 CFR Part 261, subparts C, *Characteristics of Hazardous Waste*, and D, *Lists of Hazardous Wastes.*
- P409, *Waste Management.*

[6] Cement drums are produced to meet the Type A DOT container testing criteria in 49 CFR 173.465. The gross weight shall not exceed the 852 lb weight at which a mock-up cement drum was satisfactorily drop tested at Los Alamos National Laboratory according to 49 CFR 173.465, *Transportation—Type A Packaging Tests* as reported in LANL memorandum NMT-14: 05-037, *Request for Removal of TA-55 Compensatory Measures from Type A Transuranic (TRU) Waste Containers PISA*, April 29, 2005.

1.4 Technical Safety Requirements

TSR 6.2.5 / ISI 5 is performed by Waste Services to confirm the following:

- An individual packaged TRU waste shipping container (DOT Type A) is to be visually inspected for presence of vents (WIPP-Approved, torque to the proper setting)
- and signs of wear or degradation

Frequency: Upon final container packaging (e.g., when the drum is sealed and/or when a tamper indicating device is applied).

2.0 PRECAUTIONS AND LIMITATIONS

2.1 General

A. Pause/Stop Work

All workers are responsible for pausing or stopping work when they have a reasonable belief that quality, work risks or hazards are not effectively controlled and workers have the right to do so without fear of reprisal. LANL Policy P101-18 provides more information on the differences between pausing or stopping work and the process for resuming work in either case.

If this procedure cannot be completed as written or abnormal conditions are encountered, STOP, place the work in a safe configuration if possible, and notify the Operations Center (OC) and First Line Manager (FLM).

B. Hazards and Controls

Hazards and controls that are associated with this DOP are embedded in the procedural steps. The following table identifies those hazards and controls that are not tied to a specific step:

Hazard	Controls
Nuclear Criticality Accident An inadvertent self-sustaining or divergent chain reaction that may release large amounts of neutron and gamma radiation causing serious injury or death.	• Process specific controls (administrative requirements and engineered features) are detailed on the applicable Criticality Safety Limit Approvals (CSLA) associated with this operation. See Section 10.0, References, for a listing of the applicable CSLA(s).

2.1 General (continued)

Hazard	Controls
Ionizing Radiation and Contamination	• Radiation Protection Requirements are detailed in TA55-RD-555. • Follow radiological postings. • Radiological Control Technicians (RCTs) are notified to perform a radiation survey when transferring radioactive material that could cause a new radiation area or high radiation area to be created. • As Low as Reasonably Achievable (ALARA) principles are to be used (time, distance, and/or shielding) to minimize dose to workers. • Correct personnel protective equipment (PPE) is to be used. • Radiation Work Permits (RWPs) are required when dose rates ≥ 75 mrem/hr at 30 cm or ≥ 700 mrem/hr on contact.
Hazardous Chemicals Many of the wastes processed in the CF GB contain acids and heavy metals (cadmium, chromium, and lead). Exposure to hazardous chemicals and waste containing hazardous materials can result if containment (GB, gloves, etc.) is breached or if transfer lines leak.	• The pH adjusting and cementing the hazardous waste neutralizes acids and immobilizes the heavy metals. • The controls provided by TA55-RD-555, *TA-55 Radiation Protection Requirements*, are effective in preventing exposure to hazardous chemicals. • To minimize the hazards from dangerous chemicals: – Eyewash and shower are within 100 feet of work. – Experienced and trained personnel make use of Material Safety Data Sheets (MSDS) to acquaint themselves with chemicals they are handling. – Wear PPE (chemical resistant gloves, safety glasses, safety shoes, face shield, apron, etc.) appropriate to the material being handled. – Engineered containment (GBs, pipes). – Frequent inspections of the TSD area keep NCO-2 personnel abreast of changing conditions. – During walk-arounds, watch for evidence of leaks. • Hazardous and toxic materials are stored in appropriate containers with proper labels. • Observe barriers in hazardous waste areas. • Follow guidelines in TA55-RD-539, *TA-55 Waste Management Requirements* and LIR 404-00-03.1, Hazardous and Mixed Waste Requirements. • Formal hazardous waste training is mandatory.

2.1 General (continued)

B. Hazards and Controls (continued)

Hazard	Controls
Regulated Waste This work takes place within the Treatment, Storage, and Disposal (TSD) Unit. A TSD Unit is a permitted or interim status hazardous waste management area where hazardous or mixed waste regulated by the Resource Conservation and Recovery Act (RCRA) may be stored or treated before disposal.	• The CF Process operates as a TSD Unit and must comply with New Mexico State-regulated requirements for inspection and safe operation. The inspection procedure is found in PMT2-DOP-CF-009, *Inspection of Treatment, Storage, and Disposal Units for Cement Fixation and Tank Storage*. • Manage waste in compliance with regulations. Specific waste controls are available at http://int.lanl.gov/environment/waste/. Additional waste management information is available at http://swrc.lanl.gov. • Plan 256: RCRA Hazardous/Mixed Waste Worker Training • During walk-arounds, watch for evidence of leaks. • pH adjustment and/or cementation removes the characteristics of corrosivity and toxicity of the waste.
Elevated workspace Personnel must step onto an elevated work platform to operate GB equipment. The stand is secured to the GB with a mechanism that allows the platform to be removed for access during drum-out. There is an elevated walkway behind the GB. • When entering or leaving the elevated platform, personnel may fall. • If detached from the GB, the stand may roll away from the GB while personnel are on it. • One person is positioned on the elevated walkway behind GB during drum-out and drum-in operations. This area presents a falling and tripping hazard.	• Before climbing onto the rollable elevated work stand, attach it to the GB stand. • Signs are posted to alert personnel to the tripping hazard. • When in elevated areas, personnel should use appropriate caution.

2.1 General (continued)

B. Hazards and Controls (continued)

Hazard	Controls
Manual lifting Equipment and materials weighing over 60 lb are routinely moved and lifted manually as part of the cementation process.	• Obtain assistance as needed. • To avoid back strain, use caution when moving drums with the dolly. • Only use a forklift with the drum gripper attachment to move filled drums or drums that weigh more than 200 lb. • Wear hard-toed shoes. • Before handling, inspect materials for slivers, jagged or sharp edges, burrs, and rough or slippery surfaces. • Before carrying a heavy object to another location, check the routes to ensure that obstructions and slip and trip hazards are removed. If clearance is not adequate, choose an alternate route.
Beryllium (Be) Hazard • Drums containing waste from the Pu-Be program can contain trace amounts of Be. Be is a carcinogen and is known to cause acute health effects. Inhaling particulate containing Be may cause a serious, chronic lung disease called Chronic Beryllium Disease. • The presence of Be can also result in elevated dose rates, although this effect is only considered a problem when the Be is in solution form.	• The engineered containment (glovebox) used to control radiological hazards in PF-4 is sufficient for Be hazards. • The PPE used to control radiological hazards in PF-4 (coveralls, safety glasses, gloves and booties) is sufficient for Be hazards. • Additional shielding is used if the RCT determines an elevated dose rate is present.

C. Unique Entry Conditions

Not Applicable

D. Sequence of Steps

The steps and Sections in the Performance Section are to be performed in sequence unless otherwise stated.

2.1 General (continued)

E. Criticality Safety Limit Approval (CSLA) Requirements

The CSLA requirements are detailed in documents NCS-CSLA-10-062 and NCS-CSLA-08-107. In this DOP, steps associated with criticality issues are marked with an asterisk (*) in the margin.

NCS-CSLA-10-062 *Cementation Glovebox G454*

Administrative Requirements	
Pu in solution/cemented waste/particulate	≤520 grams Pu total. No more than 200 grams Pu per drum

NCS-CSLA-8-107 *Floor Staging (FLO1)*

Administrative Requirements	
Pu in waste (cemented or typical glovebox waste) • Drum location is nominally 2 ft. by 2 ft. or larger • 15-, 30-, and 55-gallon drums only • 55-gallon drums define their own location	≤200 g Pu / drum location

F. Required Permits

NMED Permit to operate as a TSD Unit.

G. Training and/or Qualifications

Operators shall be trained on the procedural steps and documented on Attachment A, *Performance Checklist.*

2.1 General (continued)

H. Cautions

Not Applicable

I. Material Control and Accountability

This procedure complies with the LANL Nuclear Material Control and Accountability Procedural Handbook and TA55-RD-585, *Nuclear Materials Control and Accountability Requirements.* Receipt or shipment of material is accompanied by appropriate Los Alamos Nuclear Material Accountability System (LANMAS) transactions and manifests.

Because the drum is attached to the GB system, to prevent any unauthorized personnel from diverting nuclear material out through a cemented drum, the process operation also requires the following:

- If the cementation GB is unattended, it is locked. Only the CF and Evaporator (EV) operations have keyed access to DB-424 in PF-4. The CF GB has a combination lock, the combination to which is known only by CF personnel.
- When the CF process is running, two personnel must be present.

2.2 Additional Requirements and Conditions (WR Use)

Not Applicable

3.0 PREREQUISITE ACTION

3.1 Planning and Coordination

[1] Ensure that a pre-job brief has been conducted in accordance with TA55-DOP-001, *Pre-Job Briefing and Post Job Review*.

[2] Obtain permission from the Operations Center [TA55], if applicable, before conducting a Technical Safety Requirement (TSR) or In-Service Inspection (ISI) surveillance**.**

[3] Ensure the work is scheduled on the TA55 Integrated Plan of the Day (IPOD).

[4] Ensure that tool, equipment, and material numbers in the work area match those specified.

[5] Coordinate with Waste Services personnel on the timing for performing the TSR after closure of the drum.

3.2 Performance Documents

Not Applicable

3.3 Special Tools, Equipment, Parts, and Supplies

- 55-gal drum assembly
- hand dolly
- drum-out bag (ex. LANL-BAG-3-SPVC or equiv.)
- vinyl bag skirt, 26-in. diameter, 19 to 20 in. long
- yellow tape
- carbon composite filter (NucFil-019DS)
- calibrated 1½-in. socket torque wrench
- calibrated 15/16-in. socket torque wrench
- 15/16-in. open-end wrench
- impact wrench
- mallet
- screwdriver
- rod(s) for hardness testing and stub removal
- forklift with drum gripper attachment
- TID
- temporary drum shielding

3.4 Field Preparation

[1] Ensure the forklift with drum is charged and inspected.

[2] Ensure the empty drum assembly required for the drum-in is present in room 401.

[3] Ensure the following equipment is calibrated and controlled according to WMEC-PED-105-12, *Calibration and Measurement Control*:

- Weigh scale, once a year

3.5 Approvals and Notifications

Not Applicable

4.0 ACCEPTANCE CRITERIA

Prior to proceeding with the drum-out, the cemented waste must show the following characteristics:

- The surface is sufficiently hard to withstand more than ¼-inch penetration with a rod intended for this purpose,
- The surface contains no free liquid.

5.0 PERFORMANCE

5.1 Inspecting the Cement

WARNING

Hazard: **Mechanical: If the mixers are started while personnel's hands are in the gloves, the mixers can cause injury.**

Control: **Ensure that the ON/OFF switch for the mixers is in the OFF position before performing the following steps.**

[1] Remove the drum port cover if present.

NOTE Free liquid is defined as liquid not absorbed into the cement that could spill or drain from its container.

[2] Visually inspect the cemented waste for free liquid.

NOTE Free liquid is usually reabsorbed into the cement within 2 days.

[3] If free liquid is present, allow additional time for re-absorption into the cement, if possible.

[a] IF there are small volumes of free liquid,
THEN sprinkle cement powder to absorb the liquid.

[b] IF the liquid does not re-absorb, OR additional time is not available for re-absorption,
THEN remove the liquid by vacuuming it into the glass pH-adjustment column using flexible tubing.

NOTE The cement should not be able to be penetrated by more than ¼ inch.

[4] Inspect the cement for hardness by pressing on the top surface of the cement with the rod-like device supplied for this purpose.

[a] IF excessive penetration is encountered,
THEN let the cement harden for additional time.

[b] IF the cement does NOT harden adequately,
THEN notify your supervisor.

[5] Acknowledge on WCATS that dryness and a hard set have been confirmed.

5.2 Performing the Drum-out

WARNING

Hazard: **Mechanical: If the mixers are started while personnel's hands are in the gloves, the mixers can cause injury.**

Control: **Ensure that the ON/OFF switch for the mixers is in the OFF position before performing the following steps.**

[1] Place the bagout stub that was removed from the previous drum and stored in the GB into the attached cemented drum.

[a] IF there is no room for the stub,
THEN set it aside to be discarded in another drum.

[2] From inside the GB, using the rod supplied for this purpose, remove the bag skirt from the drum port,
AND push it down into the drum.

WARNING 1

Hazard: **Limited egress: The presence of the forklift and un-attached work stands in an aisle reduce access that may be needed in case of room evacuation.**

Control:
- **Park the forklift in a manner that allows adequate egress.**
- **Lower the forks of the forklift to allow personnel to easily step over them without tripping.**
- **After disconnecting the work stands, place them in a location not restrictive of egress.**

WARNING 2

Hazard: **Ionizing radiation: After the shielded work stand is moved from in front of the drums, personnel will be exposed to higher ionizing radiation.**

Control: **Temporary shielding can be applied to the drum. A lead apron may also be worn.**

[3] Unhook and move the elevated work stand away from the GB so that the drums can be accessed.

[4] Gather the drum-out bagout bag tightly,
AND wrap 6 to 10 inches of gathered area with 2 or 3 layers of yellow tape, pulling the tape firmly.

5.2 Performing the Drum-out (continued)

[5] Attach two 14-inch plastic cable ties around the bag approximately 5 inches apart, in the center of the taped area,
AND pull the ties closed only to hand tightness.

NOTE The excess tails are not to be cut off of the cable ties after tightening.

[6] Wrap the tails from the ties around the bag,
AND secure them with a yellow tape wrap.

[7] Wrap the tied-off area with 2 or 3 layers of yellow tape, pulling the tape firmly and extending the tape approximately 1 inch beyond each tie.

[8] Mark the location of each tie with a permanent marker on the outer layer of the tape.

WARNING 1

Hazard: Radiological Contamination:

- **The drum-out involves breach of the containment bag, which can release contamination.**
- **The blade of the cutting tool is contaminated.**

Control:

- **Before the drum-out is started, the RCT must be present.**
- **All personnel involved in the drum-out must be wearing full-face respirators.**
- **In addition to the standard PPE, the RCT may require additional PPE.**
- **Do not touch the blade of the cutting tool.**
- **Always store the cutting tool in its storage container when the tool is not in use.**

WARNING 2

Hazard: Mechanical: The drum-out is performed with a bag cutter that could cut personnel.

Control:

- **Use caution to avoid pinch points.**
- **Do not touch the blade of the bag cutter.**

NOTE In the following step, at least 1.5 inches is to be between the cut and each tie.

[9] With one person holding the top of the taped area, and a 2nd person holding the bottom, have one of these persons cut through the middle of the taped area with the cutting tool.

5.2 Performing the Drum-out (continued)

NOTE It is advantageous to prepare ahead of time the strips of yellow tape used in the following step.

[10] Cover the cut ends of the bag stub with strips of tape, THEN wrap each stub with 2 more layers of tape.

[11] Place the lower bag stub into the drum.

[12] Place the drum lid and lid closure ring on top of the drum, but do not fasten them.

WARNING

Hazard: **Mechanical: The scale platform is mechanically moved in and out and may result in pinching if contacted.**

Control:
- **Watch for obstructions that would impede scale movement and be prepared to stop scale movement to clear the path.**
- **The movement of the scale can be stopped at the ON/OFF switch on the control panel.**

[13] Using the scale that the drum is on, obtain the gross weight of the drum assembly.

[14] Write the gross weight on the drum lid.

NOTE The following information to be recorded in WCATS can be done at a later time.

[15] Record the gross weight in WCATS.

NOTE The ball screw should stop automatically when it reaches the full out position by contacting a limit switch.

[16] Move the scale with drum to the full-out position (~18 inches) from under the GB by activating on the control panel the ball screw attached to the scale.

5.2 Performing the Drum-out (continued)

WARNING

Hazard: **Operating a forklift (motorized hand truck): A forklift or motorized hand truck is operated in a limited space with reduced visibility. The use of a drum handling attachment reduces the rated weight capacity of the hand truck.**

Control: **The risks remain elevated for this task because no engineered controls are practical and economical for the process. The administrative controls that apply include:**

- **Forklift operators must be trained and certified to Plan 9418, PMT-2 Forklift Operator.**
- **Forklift operators must perform a daily inspection, verify that the forklift is in proper working order, and document the results on the appropriate inspection form.**
- **Use a spotter to observe and control operations.**
- **When the drum attachment is used with the motorized hand truck, be aware that the truck's capacity is reduced to 1000 lb, and the lifting height at 850 lb can be no more than 24 in.**
- **If the forklift fails while moving a drum, use another forklift to remove and transport the drum. Do not attempt to manually remove the drum from the failed forklift.**

[17] Remove the drum from the scale using the forklift with drum gripper, AND place the drum in the vicinity for preparing for drum closure in Section 5.4, *Closing the Cemented Drum.*

WARNING

Hazard: **Limited egress: The presence of the forklift and un-attached work stands in an aisle reduce access that may be needed in case of room evacuation.**

Control:

- **Park the forklift in a manner that allows adequate egress.**
- **Lower the forks of the forklift to allow personnel to easily step over them without tripping.**
- **After detaching the work stands from the GB, put them in a location that allows egress.**

[18] IF not attaching a new drum to the GB port, THEN attach a drum-out bag over the drum-out port to protect against bagout stub leakage. For the drum attachment procedure, see Section 5.3, *Attaching the Drum (Drum-in).*

5.3 Attaching the Drum (Drum-in)

NOTE This procedure is usually done immediately after a drum is removed from the GB and while personnel are still wearing respirators. The drum-in requires 2 workers handling the drum attachment.

WARNING

Hazard: **Radiological contamination: the potential for contamination release is elevated.**

Control:
- **An RCT must be present.**
- **All personnel must wear full-face respirators.**
- **The RCT may require additional PPE.**

CAUTION

Before pulling the bag, skirt or bag stub, communicate with the other worker to ensure that everyone is pulling in the correct direction.

[1] Prior to proceeding, bring to the area a drum assembly prepared according to PMT2-DOP-CF-001, *Preparing Drum Assemblies for Cement Fixation.*

5.3 Attaching the Drum (Drum-in) (continued)

WARNING 1

Hazard: **Ergonomic:**

- **Ergo hazards are posed by the awkward positions encountered during the drum-in process.**

Control:

- **An ergonomics evaluation can be requested at ergonomics@lanl.gov or from Industrial Hygiene.**
- **Take breaks.**
- **Use care to support body weight properly.**
- **Use additional personnel as needed.**

WARNING 2

Hazard: **Manual lifting: An empty drum assembly weighs over 70 lb. The weight of temporary shielding can also be significant. The risk of back strains, pinches, contusions, and possibly more serious injuries is significant.**

Control:

- **Use the hand dolly or forklift with the drum gripper attachment to move drum assemblies.**
- **Use additional personnel as needed.**

[2] Prior to placing the drum on the scale, zero the empty scale below the drum port.

NOTE The weight is to be recorded in WCATS as the tare weight.

[3] Place the drum with the lid and lid closure ring on the scale, AND obtain the tare weight.

[4] Remove the lid and lid closure ring from the drum, AND set aside for later use.

[5] With a screwdriver, loosen the hose clamp holding the bagout stub to the drum port.

5.3 Attaching the Drum (Drum-in) (continued)

WARNING

Hazard: **Radiological contamination: While pulling the elastic cord off the drum port, personnel can be exposed to contamination hazards.**

Control:
- **An RCT must be present.**
- **All personnel must wear a full-face respirator. The RCT will determine when to don and doff the respirator.**
- **Do not to pull any part of the elastic cord of the stub off of or away from the drum port.**
- **Avoid touching the elastic cord edge or the drum port.**
- **2 personnel are required to put the skirt and bagout bag elastic cord onto the drum port. They must pull the elastic cord on the skirt or bag in the same direction and must hold the back side of the skirt or the elastic cord so that it does not slip off.**

[6] Carefully pull the stub's elastic cord down to just above the lower drum port ring.

[7] Pull the new bag skirt onto the drum port, placing its elastic cord just above the stub's cord and still below the upper port ring.

[8] Pull up the new drum-out bag and place its cord ½" -1" above the upper port ring.

WARNING

Hazard: **Radiological contamination: If the clamp holding the bag to the drum port is not made secure, it may come off the drum port during normal operations.**

Control: **Ensure that the clamp holding the bag to the drum port is tightened sufficiently.**

[9] Ensure the bag and elastic cord are not twisted around the drum port and the bag hangs straight down.

[10] Place the clamp between the top port ring and the top of the bag skirt.

- **[a]** Using a screw driver, tighten the hose clamp in order to secure the drum-out bag to the port.
- **[b]** Be careful not to catch the bag skirt or the stub under the clamp.

NOTE The following step of removing the bag stub may be done later, prior to adding waste to the drum in other procedures.

[11] Pull the bag stub off the drum port from inside the GB using the rod tool.

[12] Store the stub in the GB for disposal in the next drum.

5.4 Closing the Cemented Drum

NOTE This activity usually takes place next to the GB where the drum is first placed after drum-out and before being transferred to FLO1.

WARNING 1

Hazard: **Ionizing radiation: Without the shielded work stand in front of the drums, personnel will be exposed to higher ionizing radiation.**

Control: **A lead apron may be worn.**

WARNING 2

Hazard: **Handling materials: If temporary drum shielding is installed, be aware that the shielding can be heavy and present a lifting hazard. The shielding may also be awkward to install and present an ergonomic hazard.**

Control: **At least 2 personnel are required to lift and install temporary drum shielding.**

[1] Have the RCT take the beta/gamma and neutron readings and fill out the Health Physics Radioactive Materials Survey Tag.

NOTE Contact exposure must be ≤ 200 mrem/hr according to DOE/WIPP-02-3122, *Transuranic Waste Acceptance Criteria for the Waste Isolation Pilot Plant*, Section 3.3.5 Radiation Dose Equivalent Rate.

[2] IF the contact exposure beta/gamma reading is >200 mrem/hr at contact, THEN notify your supervisor.

[3] Measure the drum freeboard to the top of the drum liner.

[4] Place the lid on the drum,
AND make sure the lid has the same bar code number as the drum.

[5] Verify that the lid has a carbon composite filter.

[6] Using a calibrated torque wrench with a 1½-in. socket, tighten the carbon filter to the specified torque for the bung-hole plug (see Appendix A for torque specification).

[7] Position the lid so that the carbon filter is lined up next to the seam of the drum.

[8] Make sure that the lid gasket is seated against the lip of the drum and the gasket recess on the underside of the lid.

5.4 Closing the Cemented Drum (continued)

NOTE 1 The gasket should not irregularly protrude from the lid and drum lip.

NOTE 2 The bolt used to close the lid closure ring has a hole drilled at ~2½ in. from the bolt head. This hole is 11/32 in. in diam., and is used for the TID.

[9] Install the lid closure ring,
AND position the bolt lugs so that they are aligned with the carbon filter over the drum seam.

[10] Ensure that the bolt ring is oriented so that the lugs are not positioned above the lid.

WARNING 1

Hazard: **Use of hand and power tools: A mallet and a power impact wrench may be used to tighten the drum lid.**

Control: **Use caution with hand tools.**

WARNING 2

Hazard: **Noise: Using the impact wrench to close the drum generates high noise levels.**

Control: **Wear hearing protection when performing tasks that generate excessive noise levels.**

[11] Press against the drum lid with your palm or a rubber mallet to make sure that it is seated on the lip of the drum.

[12] Check to see that the drum lid and drum lip are pinched together within the closure ring.

NOTE An impact wrench may be used to perform the initial threading of the lock nut.

[13] Thread the bolt into the lugs with the lock nut between the lugs.

[14] Using a calibrated torque wrench with a 15/16-in. socket, tighten the bolt to 60 ft-lb while tapping the ring with the mallet during tightening.

NOTE The ends of the ring must not touch when torqued.

[15] Tighten the jam nut with the 15/16-in. open-end wrench against the ring lug closest to the bolt head.

$ **[16]** Notify Waste Services to perform TSR 6.2.5 / ISI 5 (prior to applying TID).

[17] Apply a TID into the hole in the ring bolt to secure the lid on the drum,
AND record the TID seal number on LANMAS.

5.5 Drum Labeling and Recording Drum Information

NOTE The process of cementing waste is designed to sufficiently bind RCRA-toxic metals to meet TCLP standards for non-mixed waste. Cemented waste forms that do not meet the TCLP for a toxic metal are considered hazardous (mixed) waste.

CAUTION

If placing a new label in the designated space described below in steps [1] and [2] will result in covering another label or stenciling on the drum, choose an alternate location for the new label in the vicinity of the original designated space.

[1] Apply either a non-hazardous or hazardous waste label to the drum according to the following guidance:

[a] IF the cemented waste is hazardous waste as defined by the Code of Federal Regulations, 40 CFR Part 261, subparts C, *Characteristics of Hazardous Waste*, and D, *Lists of Hazardous Wastes*, or by P409, *Waste Management,*
THEN place a hazardous waste label on the drum as follows:

1. Refer to 40 CFR Part 261 for the waste code for the hazardous material,
AND

a. Consult supervisor for code, as needed.

b. Fill in the code on the label.

2. Enter the date the drum was drummed out as the accumulation start date.

3. Clean the label area on the drum, if necessary.

4. Attach the label to the drum to the left of the drum seam, between the 2 top rolling hoops.

NOTE Samples of the cemented waste form are periodically analyzed for toxic metals as defined in 40 CFR Part 261 for ability to meet the leaching resistance limits required of a nonhazardous waste.

[b] IF there are no hazardous components,
OR if the drum does not meet the definition of hazardous waste,
THEN place a blue non-regulated waste label to the left of the drum seam between the 2 top rolling hoops.

[2] Place a yellow radioactive waste label to the right of the drum seam, under the bar code label, between the 2 top rolling hoops.

5.5 Drum Labeling and Recording Drum Information (continued)

[3] Input into WCATS the drum closure information including the following:

- the date when the drum is physically closed and sealed,
- The gross weight of the drum and contents,
- TID number,
- Drum hardness,
- Absence of free liquid
- Drum freeboard.

[4] Perform the necessary LANMAS transactions to update the drum.

5.6 Moving the Drum

* **[1]** The criticality limit for FLO1 is 200g SNM per 55-gallon drum. Following TA55-AP-522, *Nuclear Criticality Safety,* and TA55-DOP-016, *TA55 Material Transfer Procedure,* confirm that the quantity of SNM in the drum does not exceed 200g. LANMAS may be used as an aid for this determination.

[2] Perform the LANMAS transactions to move the drum to FLO1.

WARNING

Hazard: Operating a forklift (motorized hand truck):

- **A forklift is used to maneuver the cemented drums, which can weigh over 800 lb.**
- **A forklift or motorized hand truck is operated in a limited space with reduced visibility.**
- **A drum handling attachment is used, which reduces the truck's rated weight capacity.**

Control: The risks remain elevated for this task because no engineered controls are practical and economical for the process. The administrative controls that apply include:

- **Forklift operators must be trained and certified to Plan 9418, PMT-2 Forklift Operator.**
- **Forklift operators must perform a daily inspection, verify that the forklift is in proper working order, and document the results on the appropriate inspection form.**
- **Use a spotter to observe and control operations.**
- **When the drum attachment is used with the motorized hand truck, the truck's capacity is reduced to 1000 lb, and the lifting height at 850 lb can be no more than 24 in.**

[3] Move the drum to floor location FLO1 using the forklift with drum gripper.

5.6 Moving the Drum (continued)

WARNING 1

Hazard: **Handling materials and Ergonomic: Temporary drum shielding can be heavy and be a lifting hazard. Shielding may also be awkward to handle and present an ergonomic hazard.**

Control:
- **At least 2 personnel are required to handle the temporary drum shielding.**
- **Ergonomic hazards can arise during installation and removal of the temporary shielding.**

WARNING 2

Hazard: **Mechanical: Pinching can occur during installation of the temporary drum shielding.**

Control:
- **Two personnel are present, and each one watches to prevent an accident by the other.**
- **Use caution to avoid pinch points.**

[4] Install temporary shielding on the cement drum if required by the RCT to reduce high dose.

[a] Place on the outside of the temporary shielding all labels and information applied to the drum surface.

NOTE The following steps apply to moving the drum to the corridor and PF-4 basement.

[b] Remove the shielding on the drum as needed to allow moving the drum with the forklift with drum gripper attachment.

[5] Ensure MAR limits will not be exceeded when the drum moves to the corridor and the basement are performed by following TA55-DOP-016, *TA55 Material Transfer Procedure*.

[6] Prior to moving cement drums to the corridor for RCT survey in preparation for moving the drums to the PF-4 basement, contact MBA Custodian personnel to coordinate the drum transfer and to be told which basement location to move the drums into.

NOTE The RCT must be WIPP-certified to survey the drum.

[7] When the RCT is ready to survey the drum, move the drum to the corridor using the forklift with drum gripper attachment.

5.6 Moving the Drum (continued)

[8] Have RCT to perform the following:

[a] Perform smears on the drum surface and measure the radiation dose rate at the drum surface.

[b] Record the information on the Health Physics Radioactive Materials Survey Tag.

WARNING 1

Hazard: **Operating a forklift (motorized hand truck): See above for hazards of forklift use.**

Control: **See above for controls for forklift use.**

WARNING 2

Hazard: **Limited egress: The forklift in an aisle reduces access in case of room evacuation.**

Control:
- **Park the forklift in a manner that allows adequate access.**
- **Lower the forks of the forklift to allow personnel to easily step over them without tripping.**

[9] Using the forklift with drum gripper, move the drum to the basement storage area.

6.0 POST-PERFORMANCE ACTIVITIES

6.1 Testing

Not Applicable

6.2 Restoration

Note Applicable

6.3 Results

[1] Information for the item and the drum are recorded in the CF logbook and in WCATS.

6.4 Independent Verification

[1] Waste Services verifies proper torque on carbon filter and drum condition after the drum assembly is loaded with cemented waste and upon final container packaging.

6.5 Records Processing

Not Applicable

7.0 EMERGENCY ACTIONS

[1] IF a site emergency develops,
THEN follow TA55-AP-018, *TA-55 Emergency Procedures.*

[2] No actions will be taken in response to an emergency beyond those prescribed in TA55-PLAN-007, *TA-55 Facility Emergency Plan*. They involve evacuating the area and calling the OC (55-911), then Emergency 911.

[3] In case of physical injury, call the OC at 55-911 or 7-3330,
AND request the Emergency Response Team.

8.0 DEFINITIONS AND ACRONYMS

Term	Definition
$	When located in far left hand margin identifies steps that implement Technical Safety Requirements.
*****	When located in far left hand margin identifies steps that are criticality safety significance.
ALARA	as low as reasonably achievable
Be	beryllium
CCP	Central Characterization Project
CF	cement fixation
CFR	code of federal regulations
CSLA	criticality safety limit approval
DB	dropbox
Detailed Operating Procedure	Operations-level written instructions that describe activities in a systematic format.
DOE	Department of Energy
DOP	Detailed Operating Procedure
DOT	Department of Transportation
EV	evaporator
FLM	first line manager
FLO	floor location
FOD	facility operations director
GB	glovebox
HSWA	Hazardous and Solid Waste Amendments
IPOD	Integrated Plan of the Day
ISI	In-Service Inspection
LANL	Los Alamos National Laboratory
LANMAS	Los Alamos Nuclear Material Accountability System
LIR	Laboratory implementation requirement
MAR	Material At Risk
MBA	Material Balance Area
MC&A	material control and accountability
MSDS	material safety data sheet
NMED	New Mexico Environmental Department
NMHWA	New Mexico Hazardous Waste Act
OC	operations center

8.0 DEFINITIONS AND ACRONYMS (continued)

Term	Definition
PAFD	Process Accountability Flow Diagram
PF	Plutonium Facility
PPE	Personal Protective Equipment
RCRA	Resource Conservation and Recovery Act
RCT	Radiological Control Technician
RWP	Radiological Work Permit
SME	Subject Matter Expert
SNM	Special Nuclear Material
TCLP	Toxicity Characteristic Leaching Procedure
TID	Tamper-Indicating Device
TRU	Transuranic
TSD	Treatment, Storage, and Disposal
TSR	Technical Safety Requirement
TWSR	Transuranic Waste Storage Record
WAC	Waste Acceptance Criteria
WCATS	Waste Compliance and Tracking System
WI	Work Instruction
WIPP	Waste Isolation Pilot Plant

9.0 RESPONSIBILITIES

9.1 Waste Services

- Responsible for performing **TSR 6.2.5 / ISI 5** upon final container packaging.
- TSR 6.2.5 / ISI 5 is performed by Waste Services to confirm the following:
  - An individual packaged TRU waste shipping container (DOT Type A) is to be visually inspected for presence of vents (WIPP-Approved, torque to the proper setting)
  - and signs of wear or degradation

9.2 Radiation Protection Technician

- An RCT is required to be present during the tasks in Section 5.2, *Performing the Drum-out*, Section 5.3, *Attaching the Drum (Drum-in)*, Section 5.4, *Closing the Cemented Drum* and Section 5.6, *Moving the Drum.*

9.3 MBA Custodian for B-35

- Responsible for receiving the cement drum into an approved basement location prior to shipment to TA-54.

10.0 REFERENCES

Document Number	Title
	LANL Nuclear Material Control and Accountability Procedural Handbook
	CF Process Accountability Flow Diagram (PAFD)
10 CFR 830	*Code of Federal Regulations - Nuclear Safety Management Assurance*
20 NMAC 4	*New Mexico Hazardous Waste Act (NMHWA)*
40 CFR Part 261, Subpart C	*Characteristics of Hazardous Waste*
40 CFR Part 261, Subpart D	*Lists of Hazardous Wastes*
40 CFR, Parts 260 - 273	*Code of Federal Regulations - Solid Waste*
49 CFR 173.465	*Code of Federal Regulations - Transportation---Type A Packaging Tests*
CCP-QP-016	*CCP Control of Measuring, Testing, and Data Collection Equipment*
DOE/WIPP-02-3122	*Transuranic Waste Acceptance Criteria for the Waste Isolation Pilot Plant*
LIR 404-00-03.1	*Hazardous and Mixed Waste Requirements*
NCS-CSLA-10-062	*Criticality Safety Limit Approval – Cementation Glovebox GB454*
NCS-CSLA-8-107	*Criticality Safety Limit Approval – Floor Staging (FLO1)*
NMT-14: 05-037 memorandum	*Request for Removal of TA-55 Compensatory Measures from Type A Transuranic (TRU) Waste Containers PISA*
P101-18	*Procedure for Pause/Stop Work*
P409	*Waste Management*
PMT2-DOP-CF-001	*Preparing Drum Assemblies for Cement Fixation*
PMT2-DOP-CF-009	*Inspection of Treatment, Storage, and Disposal Units for Cement Fixation and Tank Storage*
TA55-AP-018	*TA-55 Emergency Procedures*
TA55-AP-102	*Using Temporary Shielding in PF-4*
TA55-AP-522	*Nuclear Criticality Safety*
TA55-DOP-001	*Pre-Job Briefing and Post Job Review*
TA55-DOP-016	*TA55 Material Transfer Procedure*
TA55-PLAN-007	*TA-55 Facility Emergency Plan*

10.0 REFERENCES (continued)

Document Number	Title
TA55-PLAN-046	*Quality Management Plan (QMP)*
TA55-RD-539	*TA-55 Waste Management Requirements*
TA55-RD-555	*TA-55 Radiation Protection Requirements*
TA55-RD-585	*Nuclear Materials Control and Accountability Requirements*
TA55-TSR-2011	*Technical Safety Requirements (TSRs)*
WMEC-PED-105-12	*Calibration and Measurement Control*

11.0 RECORDS

Record Identification	Record Type Determination	Protection/Storage Methods	Processing Instructions
Attachment A, *Performance Checklist*	Training Record	Maintain in training file	Record shall be maintained by the Training Coordinator upon completion of training and qualification. When no longer in use transfer to the DCC for archiving.
Forklift Operator's Daily Inspection Form or equivalent	Inspection record	Lead CF process operator keeps completed form	When the records are ready for final disposition, the record is transferred to Records Management.
WCATS	Electronic TRU waste management record	Electronic media protected by password	When the records are ready for final disposition, the record is transferred to Records Management.
CF Logbook	Written process data record	Records shall be maintained at the CF process location.	When the records are ready for final disposition, the record is transferred to Records Management.

12.0 APPENDICES AND ATTACHMENTS

Appendix	Title
A	*Fitting Installations for UN, Type A, 55-gallon Drums*

Attachment	Title
A	*Performance Checklist*

Appendix A, Fitting Installations for UN, Type A, 55-gallon Drums

CAUTION

In order for the Type A, 55-gal drum to safely perform to its rated ability, the installation of the drum lid ring and bung hole fittings need to be strictly adhered to. Any other method of assembly, or the use of any drum components (rings, gaskets, or fittings) that are not specified in this design type, will immediately invalidate the UN and DOT performance rating of the drum.

The table below shows the proper torque that must be applied to each drum fitting to assure proper container performance.

Plug Torque Setting

Drums are typically procured from Skolnik Industries. However, other drum manufacturers may be used. The specifications below are approved for Skolnik drums, but others manufacturers may be different. Always refer to purchase order and data package to insure use of actual manufacturer's current closure instructions.

	Type II-Reike VGII Serrated Base, Hexagon Head Plug		
	Steel Plugs		*Poly Plugs*
Plug Size	**Rubber Gasket**	**Poly Gasket**	
2-in.	30 ft-lbs	40 ft-lbs	20 ft-lbs

Filter Torque Setting

The specifications below are approved for NucFil-019DS Filter with 3/4" – 14 NPS Threads manufactured by Nuclear Filter Technology. However, filters from other manufacturers and other filters from Nuclear Filter Technology may be different. Always refer to purchase order and data package to insure use of actual manufacturer's current closure instructions.

	NucFil-019DS Filter with ¾"-14 NPS Threads	
Plug Size	**Payload <900 lbs.**	**Payload >900 lbs.**
3/4-in.	10 ft-lbs 120 in-lbs	15 ft-lbs 180 in-lbs

Attachment A, Performance Checklist

Page 1 of 2

Procedure Number: PMT2-DOP-CF-002,R3 Title: *Drum-in/Drum-out Operations in Cement Fixation*

Task Hazard Level ☐ Minimal ☐ Low ☒ Medium ☐ High ☐ Mission-critical

Worker's Name: _____ Z number _____

☐ Worker has completed the following training prerequisites _____
(Verifiers name and Z number)

☐ _____ ☐ _____
☐ _____ ☐ _____
☐ _____ ☐ _____
☐ _____ ☐ _____
☐ _____ ☐ _____
☐ _____ ☐ _____

Task #	Qualification Requirements	Instruction	Evaluation
	Emergency Actions		
1	Discuss how to respond in an emergency shutdown while performing this procedure.	☐	☐
	Comments	☐	☐
	Hazards and Controls		
1	Discuss the hazards associated with this procedure and how to minimize them.	☐	☐
2	Discuss the heavy lifting hazard associated with this procedure and how to minimize it.	☐	☐
3	Discuss the contamination hazard when performing the drum-in and drum-out, and how to minimize it.		
	Comments	☐	☐

Attachment A, Performance Checklist

Page 2 of 2

Task #	Qualification Requirements	Instruction	Evaluation
	Procedural Steps		
1	Demonstrate and/or discuss inspecting the cement.	☐	☐
2	Demonstrate and/or discuss how to prepare for drum-out.	☐	☐
3	Demonstrate and/or discuss how to perform the drum-out.	☐	☐
4	Demonstrate and/or discuss how to complete the closure of the cemented drum.	☐	☐
5	Demonstrate and/or discuss the steps for moving the drum.	☐	☐
6	Demonstrate and/or discuss how to attach the drum.	☐	☐
	Comments	☐	☐

Signature Approvals

Worker's Name (Last, First, Middle Init.)	**Signature**	**Z #**	**Group**	**Date**

(Your signature indicates that you are confident to safely and independently perform work relative to this procedure.)

Instructor's Name (Last, First, Middle Init.)	**Signature**	**Z #**	**Group**	**Date**

(Your signature indicates that you are confident that the worker indicated above is adequately prepared for a performance evaluation.)

Evaluator's Name (Last, First, Middle Init.)	**Signature**	**Z #**	**Group**	**Date**

(Your signature indicates that you are confident that the worker indicated above has been adequately trained to safely and independently perform work relative to this procedure.)

PMT2-DOP-CF-003, R1 Certifying, Transferring and Storing Evaporator Bottoms for Cement Fixation

LA-UR-14-24634

MET-1

Detailed Operating Procedure

Approval Cover Sheet

Document number: PMT2-DOP-CF-003, R1

Effective date: 8/20/12

Next review date: 8/20/15

Supersedes:

Title: Certifying, Transferring and Storing Evaporator Bottoms for Cement Fixation

Status:	Hazard:	For Document Control Use Only:
☐ New	☐ Low-hazard	
☒ Major revision	☒ Moderate-hazard	
☐ Minor revision	☐ High-hazard/complex	
☐ Review, no change	**Use Type:**	
	☐ Reference ☒ Use every Time (Attachment A only)	
	☐ WR (Use every Time)	

	Organization	Date	Signature
Approved for Use By:			
SME: Georgette Ayers	NCO-2	8/16/12	SIGNATURE ON FILE
Authorized for Use By:			
Operations Responsible Line Manager: Jennifer Butler	MET-1	8/16/12	SIGNATURE ON FILE
Authorized for Use By:			
FOD/Operations Manager: Chuck Tesch	TA55-OPS	8/20/12	SIGNATURE ON FILE

Approved by:

	Organization	Date	Signature
Approved for Use By:			
SME/Engineer: Casey Finstad	MET-1	8/6/12	SIGNATURE ON FILE
Authorized for Use By:			
Group Leader: Kent Abney	MET-1	8/6/12	SIGNATURE ON FILE

Approved by:

Design Agency Liaison: ***Date***	***Process Owner:*** ***Date***
N/A	N/A
Quality Assurance: ***Date***	***SME:*** ***Date***
	N/A

☒ Unclassified ☐ Restricted Data	**Derivative Classifier:**
☐ Confidential ☐ Formerly Restricted Data	**Name: Keith Fife**
☐ Secret ☐ National Security Information	**Title: TSM-TPM Date: 8/9/12**
☐ Unclassified Controlled Nuclear Information	
☐ Official Use Only	**Derived from: N/A**

Revision History

Document Number	Effective Date	Action	Description
PMT2-DOP-CF-003, R1	8/20/12	Major revision	• Updated Section 10, *References* • Reformatted to latest DOP template format. • Removed attachments on LANMAS instructions, PAFD and CSLA. • Replaced MASS with LANMAS and WMS with WCATS.
PMT2-DOP-CF-003, R0	12/1/10	New Procedure	• Reformatted to IMP 300. • Incorporated Facility and RP-1 audit findings. • Supersedes NMT2-WI-009-CF-904, R2 and NMT2-IWD-WI-009-CF-904, R3.
NMT2-WI-009-CF-904, R2	08/25/06	Major revision	• Added hazards and controls for regulated waste and hazardous chemicals. • Updated the acronym list. • Updated group names. • Updated the CSLA in Attachment A.

Table of Contents

1.0 INTRODUCTION 4

1.1 Purpose 4
1.2 Scope and Applicability 4
1.3 Applicability 4
1.4 Technical Safety Requirements 4

2.0 PRECAUTIONS AND LIMITATIONS 5

2.1 General 5
2.2 Additional Requirements and Conditions (WR Use) 8

3.0 PREREQUISITE ACTION 8

3.1 Planning and Coordination 8
3.2 Performance Documents 8
3.3 Special Tools, Equipment, Parts, and Supplies 9
3.4 Field Preparation 9
3.5 Approvals and Notifications 9

4.0 ACCEPTANCE CRITERIA 9

5.0 PERFORMANCE 10

5.1 Examining the EV Bottoms 10
5.2 Transferring EV Bottoms to CF Storage Tanks 12

6.0 POST-PERFORMANCE ACTIVITIES 15

6.1 Testing 15
6.2 Restoration 15
6.3 Results 15
6.4 Independent Verification 15
6.5 Records Processing 15

7.0 EMERGENCY ACTIONS 15

8.0 DEFINITIONS AND ACRONYMS 16

9.0 RESPONSIBILITIES 17

9.1 EV Process Operator 17

10.0 REFERENCES 17

11.0 RECORDS 18

12.0 APPENDICES AND ATTACHMENTS 18

Attachment A, CF Storage Tank Log Sheet 19
Attachment B, Performance Checklist 20

1.0 INTRODUCTION

1.1 Purpose

This Detailed Operating Procedure (DOP) describes how evaporator (EV) bottoms solutions are certified and transferred to the Cement Fixation (CF) storage feed tanks (FTs). The EV bottoms are the primary waste feed to the CF process where they are treated and solidified to meet regulatory requirements. They are inspected and certified to verify they are as reported by the generator, are compatible with the cement, and meet discard criteria. CF personnel document the certification on the Waste Management Waste Compliance and Tracking System (WCATS). Then, with the help of EV personnel, the CF personnel transfer the EV bottoms solution to the FT tanks.

1.2 Scope and Applicability

This DOP is performed at TA-55 in Room 401, location CF by NCO-2 personnel assigned to the CF process. The EV personnel assist in the waste transfer by performing the required valve alignments within the EV process.

1.3 Applicability

This procedure is intended to produce a cemented waste form that complies with the Waste Isolation Pilot Plant (WIPP) Waste Acceptance Criteria (WAC) as defined in *Transuranic Waste Acceptance Criteria for the Waste Isolation Pilot Plant*, DOE/WIPP-02-3122, for contact-handled TRU waste.

The CF process and this procedure are subject to the quality assurance program plan specified in TA55-PLAN-046, *Quality Management Plan (QMP)* and 10 CFR 830, *Code of Federal Regulation - Nuclear Safety Management Assurance.*

This procedure is subject to the Central Characterization Project (CCP) procedure CCP-QP-016, *CCP Control of Measuring, Testing, and Data Collection Equipment*.

This procedure involves the transfer and storage of a waste stream that is regulated as a mixed waste through the Resource Conservation and Recovery Act (RCRA), as defined by 40 CFR, Parts 260 through 273, *Code of Federal Regulation - Solid Waste*, as amended by the Hazardous and Solid Waste Amendments (HSWA). Hazardous waste regulation and enforcement in New Mexico is performed by the New Mexico Environmental Department (NMED) under 20 NMAC 4, *New Mexico Hazardous Waste Act (NMHWA)*.

1.4 Technical Safety Requirements

Not Applicable

2.0 PRECAUTIONS AND LIMITATIONS

2.1 General

A. Pause/Stop Work

All workers are responsible for pausing or stopping work when they have a reasonable belief that quality, work risks or hazards are not effectively controlled and workers have the right to do so without fear of reprisal. LANL Policy P101-18 provides more information on the differences between pausing or stopping work and the process for resuming work in either case.

B. Hazards and Controls

Hazard	Controls
Nuclear Criticality Accident	• Process specific controls (administrative requirements and engineered features) are detailed on the applicable Criticality Safety Limit Approvals (CSLA) associated with this operation. See Section 10.0, References, for a listing of the applicable CSLA(s).
Ionizing Radiation and Contamination	• Radiation Protection Requirements are detailed in TA55-RD-555. • Follow radiological postings. • Radiological Control Technicians (RCTs) are notified to perform a radiation survey when transferring radioactive material that could cause a new radiation area or high radiation area to be created. • As Low as Reasonably Achievable (ALARA) principles are to be used (time, distance, and/or shielding) to minimize dose to workers. • Correct personnel protective equipment (PPE) is to be used. • Radiation Work Permits (RWPs) are required when dose rates ≥ 75 mrem/hr at 30 cm or ≥ 700 mrem/hr on contact.

B. 2.1 General (continued)

Hazards and Controls (continued)

Hazard	Controls
Regulated Waste: The CF process operates as a Treatment, Storage, and Disposal (TSD) Unit. A TSD Unit is a hazardous waste management unit where hazardous or mixed waste regulated by the Resource Conservation and Recovery Act (RCRA) may be stored or treated before disposal.	• The CF process must comply with New Mexico State-regulated requirements for TSD Unit operation, including inspections to ensure safe operation. The inspection procedure is found in PMT2-DOP-CF-009, *Inspection of Treatment, Storage, and Disposal Units for Cement Fixation and Tank Storage*. • Manage waste in compliance with regulations. Specific waste controls are available at http://int.lanl.gov/envoronmental/waste. Additional waste management information is available at http://swrc.lanl.gov. • Plan 256: RCRA Hazardous/Mixed Waste Worker Training • During walk-arounds, watch for evidence of leaks.
Hazardous chemicals: • Many of the wastes processed in the CF glovebox contain acid (nitric, hydrochloric, and sulfuric) and heavy metals (cadmium, chromium and lead). • Exposure to hazardous chemicals and waste containing hazardous materials can result if containment (glovebox, gloves, etc.) is breached or if transfer lines leak.	To minimize the hazards from dangerous chemicals: • Eye wash and shower are located within 100 feet of the glovebox. • Material Safety Data Sheets (MSDS) are used to acquaint personnel with chemicals they are handling. • Personnel wear PPE appropriate to the material being handled. • Engineered containment (gloveboxes, pipes). • Frequent inspections of the TSD area keep personnel abreast of changing conditions. • During walk-arounds, personnel watch for evidence of leaks. • Personnel observe barriers in hazardous waste areas. • Personnel follow guidelines in TA55-RD-539, *TA-55 Waste Management Requirements* and P409, *Waste Management*. • Formal hazardous waste training is mandatory.

B. 2.1 General (continued)

Hazards and Controls (continued)

Hazard	Controls
Beryllium (Be) Hazard: • Some waste solutions from the Pu-Be program can contain trace amounts of Be. Inhaling particulate containing Be may cause a serious, chronic lung disease called Chronic Beryllium Disease. Leakage of and drying out of EV bottoms can result in respirable form of Be. • The presence of Be in can result in elevated dose rates of ionizing radiation, although this effect is usually only considered a problem when the Be is in solution form.	• Be in EV bottoms solution is not in a respirable form. • In the event of a spill of EV bottoms, standard PPE protection for radiological protection is sufficient to protect against Be inhalation. Additional shielding is used if the RCT determines an elevated dose rate is present. Refer to procedure TA55-AP-102, *Using Temporary Shielding in PF-4* for additional shielding that maybe required.

C. Unique Entry Conditions

Not Applicable

D. Sequence of Steps

The steps and Sections in the Performance Section are to be performed in sequence unless otherwise stated.

E. Criticality Safety Limit Approval (CSLA) Requirements

In this DOP, steps associated with criticality issues are marked with an asterisk (*) in the margin. See the following Criticality Safety Limit Approval (CSLA) document for requirements:

NCS-CSLA-10-061 *FT Tanks at Location CF*

Administrative Requirements	
Pu	Pu in EV liquid waste solution

2.1 General (continued)

F. Required Permits

NMED Permit to operate as a TSD Unit.

Radiation Work Permits (RWPs) are required when dose rates ≥ 75 mrem/hr at 30 cm or ≥ 700 mrem/hr on contact.

G. Training and/or Qualifications

Operators must be qualified to this procedure or in supervised qualification on this procedure. Operator qualification is documented on the Performance Checklist, Attachment B.

H. Cautions

Not Applicable

I. Material Control and Accountability

Procedures under this DOP comply with the *LANL Nuclear Material Control and Accountability Procedural Handbook.* Receipt or shipment of material is accompanied by appropriate Material Accountability and Safeguards System (LANMAS) transactions and manifests, and includes passwords and other security measures that are designed to protect the shipment and personnel who are involved with it. The protective force is responsible for providing physical security for a shipment to and from the facility.

2.2 Additional Requirements and Conditions (WR Use)

Not Applicable

3.0 PREREQUISITE ACTION

3.1 Planning and Coordination

[1] Ensure that a pre-job brief has been conducted in accordance with TA55-DOP-001, *Pre Job Briefing and Post Job Review*.

[2] No technical Safety Requirement (TSR) or In-Service Inspection (ISI) surveillances are performed in this procedure.

[3] Ensure the work is scheduled on the TA55 Integrated Plan of the Day (IPOD).

[4] Ensure that tool, equipment, and material numbers in the work area match those specified.

[5] Coordinate with the Evaporator personnel for the appropriate time to transfer solution to the FT tanks.

3.2 Performance Documents

PMT2-DOP-CF-006-FM1, *CF Storage Tank Log Sheet*

3.3 Special Tools, Equipment, Parts, and Supplies

- Computer for feed tank (FT) valve control and WCATS
- Push button station for FT valve control

3.4 Field Preparation

Not Applicable

3.5 Approvals and Notifications

Not Applicable

4.0 ACCEPTANCE CRITERIA

Not Applicable

5.0 PERFORMANCE

5.1 Examining the EV Bottoms

[1] EV personnel - Contact the CF personnel when an EV batch is on hand for examining.

NOTE 1 EV personnel are responsible for entering the identification and assay information for the waste item into WCATS.

NOTE 2 *Evaporator Bottoms* should be listed as the matrix.

[2] In WCATS,
select the item to be certified.

[3] Obtain from the EV process personnel the C-AAC assay sheet.

WARNING

Hazard: Elevated work platforms and ladders: Such equipment may be used to view tank volumes and can present tripping and falling hazards.

Control:

- When working on elevated platforms and ladders, use caution.
- Place the ladder on a solid, level surface.
- If possible, use the mirror extension to determine tank volume instead of climbing a ladder.

NOTE The following instructions reflect that evaporation can result in a volume loss and a volume gain can indicate the addition of an unknown liquid.

[4] Verify that the volume for the EV batch reported on the C-AAC assay sheet and WCATS matches the actual volume in the EV glovebox glass column (TK tank).

[a] IF there is a volume difference,
THEN perform the following:

1. IF the reading is ≤0.5 liters less than the WCATS value,
THEN accept the WCATS value.

2. IF the reading is >0.5 liters less than the WCATS value,
THEN require the EV personnel to resample and re-assay the batch.

3. IF the reading is ≤0.1 liters more than the WCATS value,
THEN accept the WCATS value.

4. IF the reading is >0.1 liters more than the WCATS value,
THEN require the EV personnel to resample and re-assay the batch.

5.1 Examining the EV Bottoms (continued)

[5] Before the TK Tank is sparged,
THEN examine the EV bottoms in the TK tank for the following:

NOTE Excessive amounts of precipitate in the EV bottoms can plug the FTs.

[a] Verify that there is no more than 1.5 liters of salt (precipitate) at the bottom of the column.

1. IF more than 1.5 liters of salt are present,
THEN contact your supervisor for instructions.

[b] Verify that there is only a single liquid phase (i.e., the liquids have not separated into layers).

1. IF there is only a single liquid phase,
THEN indicate on WCATS that this is a single phase item.

2. IF there is more than one liquid phase,
THEN contact your supervisor because one of the phases may be prohibited organic liquid.

[6] Verify that the EV personnel have indicated on WCATS the hazardous nature of the waste in accordance with P409, *Waste Management*, or 40 CFR Part 261, subparts C, *Characteristics of Hazardous Waste*, and D, *Lists of Hazardous Wastes*.

[7] Verify that the item identification and assay information agrees between the C-AAC assay sheet, WCATS and LANMAS.

NOTE 1 The discard limit (DL) for EV bottoms may be exceeded (up to and including 10g/L Pu) if a discard justification memo is attached in WCATS.

NOTE 2 To determine whether the item has exceeded the DL, WCATS converts the analysis in grams/liter to the grams/kilogram of waste matrix using a density value of 1.5 kg/L of waste.

[8] Determine if the item meets the DL.

[a] IF the item exceeds the DL,
THEN attach the appropriate discard justification memo from the list of memos in WCATS.

[9] On WCATS, sign off that the item is certified.

5.2 Transferring EV Bottoms to CF Storage Tanks

NOTE 1 Do not split one EV batch (TK tank) between two FTs.

NOTE 2 FT5 is normally reserved for draining the vacuum trap. If FT5 is needed for storage, then supervision is to be contacted for permission.

[1] Select a CF feed tank (FT) that is not currently being used for a cementation run.

[a] IF a storage tank is selected that already has EV solution in it, THEN ensure that none of the EV solution in the tank has already been used on a cementation run.

CAUTION

Do not select an FT for filling if the final volume could exceed ~50 liters or be above the top of the top sight glass.

[2] Select the waste item on WCATS.

NOTE WCATS calculates the volume and SNM for the tank.

[3] On WCATS, place the item into the FT selected.

[4] On Attachment A, *CF Storage Tank Log Sheet*, enter the following in the **ITEM IN** section:

- Date In
- Item ID
- MT (of the item to be transferred into the FT)
- Volume
- Tech (initials of the person doing the transfer)

NOTE WCATS assigns a new ID number for the first EV batch to be transferred into the FT. Additional batches added to the tank are combined into this new ID.

[5] On Attachment A, *CF Storage Tank Log Sheet*, enter the (new) Item ID in the **BLENDED ITEM** section.

[6] WHEN more than one EV batch is to be added to an FT tank, calculate the new blended Pu and Am or U grams, and the uncertainty for the entire volume by adding the values from the individual batches.

5.1 Transferring EV Bottoms to CF Storage Tanks (continued)

[7] On Attachment A, *CF Storage Tank Log Sheet*,
enter the new combined values in the **BLENDED ITEM** section.

[8] Verify that the SNM grams, enrichment and volume listed on WCATS match those on LANMAS.

[9] Perform the necessary LANMAS transactions to move the item to the FT tank.

* **[10]** Before physically moving fissile material,
ensure that the transfer will not cause the criticality limits to be exceeded at the destination location or other locations en route.

[11] Have the EV personnel sparge their TK tank for about 2 to 3 minutes just prior to transferring the solution.

NOTE The CF system has an interlock that will disable air flow to the air-actuated valves in the FT system if the glovebox negativity reduces past a set point on the photohelic. This was designed to prevent an uncontrolled flow of air into the glovebox. However, the photohelic can respond to a temporary condition such as several personnel putting their hands into the glovebox at the same time.

[12] IF it is found that there is no air pressure for valve actuation,
THEN have the appropriate facility personnel reset the photohelic.

[13] Close the vent valves on the vent/vacuum trap and all of the FTs, except the FT into which the solution is to be transferred.

[14] Open the vacuum valve to the vent/vacuum trap.

[15] Ensure that the vent/vacuum valve on the selected FT is open.

[16] Ensure the feed inlet valves for all the other tanks are closed,
THEN open the feed inlet valve on the selected FT.

[17] Open the main FT system feed inlet valve.

[18] Notify EV personnel that the transfer can begin from the EV side.

[19] Verify with the EV technician that they have opened the drain valve on the appropriate TK tank.

[20] Watch through the receiving FT sight glass for the EV solution to begin filling the FT,
AND alert the EV technician if the EV solution does not begin filling the FT within 1 minute.

5.1 Transferring EV Bottoms to CF Storage Tanks (continued)

NOTE 1 It takes ~5 minutes to empty the transfer line between the TK and the FT.

NOTE 2 When the discharging solution can no longer be observed through the top sight glass on the receiving FT tank, the line is empty.

[21] Verify the EV to FT transfer is complete.

[22] IF this transfer is to be immediately followed by a 2nd batch (either to the same FT or another),
THEN repeat steps 5.1[11] through 5.1[21].

[23] After all the transfers are complete,
perform the following:

- **[a]** Close the feed inlet valve to all FTs.
- **[b]** Close the main FT system inlet valve.
- **[c]** Close the vacuum valve and open the vent valve on the vent/vacuum trap.
- **[d]** Open the vent/vacuum valves on all FTs.

6.0 POST-PERFORMANCE ACTIVITIES

6.1 Testing

Not Applicable

6.2 Restoration

Not Applicable

6.3 Results

[1] Record information for the EV item on Attachment A and in WCATS.

6.4 Independent Verification

Not Applicable

6.5 Records Processing

Not Applicable

7.0 EMERGENCY ACTIONS

CAUTION

If the FT tank is overfilled, the overflow will be pulled into the vacuum trap. Transfer of the solution back to the original FT tank may result in another overflow.

[1] IF the FT tank is overfilled,
THEN contact your supervisor for guidance.

CAUTION

If a tank is leaking solution it may be necessary to transfer the contents from one FT to another.

[2] IF a solution needs to be transferred from one FT to another FT,
THEN contact your supervisor for guidance.

8.0 DEFINITIONS AND ACRONYMS

Term	Definition
ALARA	As Low As Reasonably Achievable
Am	Americium
Be	beryllium
C-AAC	Actinide Analytical Chemistry
CF	cement fixation
CFR	Code Of Federal Regulations
CSLA	Criticality Safety Limit Approval
DL	Discard Limit
DOP	Detailed Operating Procedure
EV	evaporator
FT	Feed Tank for the cement fixation system
g/L	grams per liter
HSWA	Hazardous and Solid Waste Amendments
IPOD	Intergrated Plan of the Day
ISI	In-Service Inspection
LANMAS	materials accountability and safeguards system
MSDS	Material Safety Data Sheet
MT	material type
NMED	New Mexico Environmental Department
NMHWA	New Mexico Hazardous Waste Act
Pu	plutonium
RCRA	Resource Conservation and Recovery Act
RCT	radiological control technician
RWP	radiological work permit
SNM	special nuclear material
TK tanks	glass columns in the EV glovebox
TSD	Treatment, Storage and Disposal
TSR	Technical Safety Requirement
TRU	transuranic
U	uranium
WAC	Waste Acceptance Criteria
WIPP	Waste Isolation Pilot Plant
WCATS	Waste Compliance and Tracking System

9.0 RESPONSIBILITIES

9.1 EV Process Operator

- Responsible for entering the waste's identification and assay information into WCATS.
- Responsible for the TK tank valve manipulations during transfer of waste from the TK tanks to the FT tanks.

10.0 REFERENCES

Document Number	Title
	LANL Nuclear Material Control and Accountability Procedural Handbook
10 CFR 830	*Code of Federal Regulations - Nuclear Safety Management Assurance*
20 NMAC 4	*New Mexico Hazardous Waste Act (NMHWA)*
40 CFR Part 261, Subpart C	*Characteristics of Hazardous Waste*
40 CFR Part 261, Subpart D	*Lists of Hazardous Wastes*
40 CFR, Parts 260 - 273	*Code of Federal Regulations - Solid Waste*
CCP-QP-016	*CCP Control of Measuring, Testing, and Data Collection Equipment*
DOE/WIPP-02-3122	*Transuranic Waste Acceptance Criteria for the Waste Isolation Pilot Plant*
NCS-CSLA-10-061	*Criticality Safety Limit Approval for FT Tanks at Location CF*
P101-18	*Procedure for Pause/Stop Work*
P409	*Waste Management*
PMT2-DOP-CF-006-FM1	*CF Storage Tank Log Sheet*
PMT2-DOP-CF-009	*Inspection of Treatment, Storage, and Disposal Units for Cement Fixation and Tank Storage*
TA55-DOP-001	*Pre Job Briefing and Post Job Review*
TA55-PLAN-046	*Quality Management Plan (QMP)*
TA55-RD-539	*TA-55 Waste Management Requirements*
TA55-RD-555	*TA-55 Radiation Protection Requirements*

11.0 RECORDS

Record Identification	Record Type Determination	Protection/Storage Methods	Processing Instructions
Attachment A, *CF Storage Tank Log Sheet*	QA Record	Supervision shall implement a reasonable level of protection to prevent loss and degradation. Records shall be maintained in a metal file cabinet when not in use.	When the records are ready for final disposition, the record is transferred to Records Management and processed in accordingly.
Attachment B, *Performance Checklist*	Training Record	Maintain in training file	Record shall be maintained by the Training Coordinator upon completion of training and qualification. When no longer in use transfer to the DCC for archiving.

12.0 APPENDICES AND ATTACHMENTS

Attachment	Title
A	*CF Storage Tank Log Sheet*
B	*Performance Checklist*

Attachment A, CF Storage Tank Log Sheet

SITE ID: 481

CF Storage Tank Log Sheet

LOCATION: 401

TANK #_____

Effective Date: _____

EPA WASTE NUMBERS: D002, D006, D007, D008, D009

HANDLING CODE: S02

ITEM IN					BLENDED ITEM							
Date In	Item ID	MT	Volume	Tech	Item ID	Pu SNM & UNC*	Am SNM & UNC	Initial Volume	Actual Volume to Drum	Remaining Volume	Date Out	Tech

*UNC = uncertainty

RCRA Part A Unit Capacity: 460 Gallons

CF Storage Tank Log Sheet-FM1

PMT2-DOP-CF-006-FM1-R0

Attachment B, Performance Checklist

Page 1 of 2

Procedure Number: PMT2-DOP-CF-003, R1 Title: *Certifying, Transferring and Storing Evaporator Bottoms for Cement Fixation*

Worker's Name: _____ Z number _____

☐ Worker has completed the following training prerequisites _____
(Verifiers name and Z number)

The worker must be qualified on the following procedures and training plans.

☐ Plan # 256, Hazardous/Mixed Waste Worker Training

Qualification Requirements

Task #	Emergency Actions	Instruction	Evaluation
1	Discuss the emergency situations listed in Section 7.0, and what your response should be.	☐	☐
	Comments		
Task #	**Hazards and Controls**	**Instruction**	**Evaluation**
1	Discuss the criticality hazards associated with this work instruction and how to minimize them.	☐	☐
2	Discuss the other hazards associated within this procedure and how to minimize them.	☐	☐
	Comments		

Attachment B, Performance Checklist

Page 2 of 2

Qualification Requirements, Continued

Task #	Procedural Steps	Instruction	Evaluation
1	Discuss why feeds need to be certified.	☐	☐
2	Demonstrate and discuss how to examine the EV bottoms.	☐	☐
3	Demonstrate and discuss how to determine if the item meets the DL.	☐	☐
4	Demonstrate and discuss how to prepare for the transfer.	☐	☐
5	Discuss how to deal with discrepancies between the volume reported by the EV personnel and that observed during the certification process.	☐	☐
6	Demonstrate and discuss how to perform the transfer of the EV bottoms.	☐	☐
7	Discuss how to transfer EV from the vacuum trap to an FT, the potential problem that can occur, and how to avoid the problem.	☐	☐
	Comments		

Signature Approvals

Worker's Name (Last, First, Middle Init.)	**Signature**	**Z #**	**Group**	**Date**

(Your signature indicates that you are confident to safely and independently perform work relative to this procedure.)

Instructor's Name (Last, First, Middle Init.)	**Signature**	**Z #**	**Group**	**Date**

(Your signature indicates that you are confident that the worker indicated above is adequately prepared for a performance evaluation.)

Evaluator's Name (Last, First, Middle Init.)	**Signature**	**Z #**	**Group**	**Date**

(Your signature indicates that you are confident that the worker indicated above has been adequately trained to safely and independently perform work relative to this procedure.)

PMT2-DOP-CF-005, R1 Non-evaporator Solution Operations for Cement Fixation

LA-UR-14-24711

Extended Until 6/24/15 per Memo MET-DO:13-08. Extension request was approved by Jeff Yarbrough on 06/24/13.

MET-1

Detailed Operating Procedure

Approval Cover Sheet

Document number: PMT2-DOP-CF-005, R1

Effective date: 5/10/12

Next review date: 5/10/14

Supersedes:

Title: Non-evaporator Solution Operations for Cement Fixation

Status:	Hazard:	For Document Control Use Only:
☐ New	☐ Low-hazard	
☒ Major revision	☒ Moderate-hazard	
☐ Minor revision	☐ High-hazard/complex	
☐ Review, no change	**Use Type:**	
	☒ Reference ☐ Use every Time	
	☐ WR (Use every Time)	

	Organization	Date	Signature
Approved for Use By: Operations: Georgette Ayers	NCO-2	5/2/12	SIGNATURE ON FILE
Authorized for Use By: Operations: Ron Chavez	NCO-2	5/9/12	SIGNATURE ON FILE
Authorized for Use By: FOD/Operations Manager: Chuck Tesch	TA55-OPS	5/10/12	SIGNATURE ON FILE

Approved by:

	Organization	Date	Signature
Approved for Use By: SME: Casey Finstad	MET-1	5/2/12	SIGNATURE ON FILE
Authorized for Use By: Group Leader: Kent Abney	MET-1	5/3/12	SIGNATURE ON FILE

Approved by:

Design Agency Liaison: ***Date***	***Process Owner:*** ***Date***
Quality Assurance: ***Date***	***SME:*** ***Date***

☒ Unclassified ☐ Restricted Data	**Derivative Classifier:**
☐ Confidential ☐ Formerly Restricted Data	**Name: Steve Willson (SIGNATURE ON FILE)**
☐ Secret ☐ National Security Information	**Title: Scientist 3 Date: 5/10/12**
☐ Unclassified Controlled Nuclear Information	
☐ Official Use Only	**Derived from: n/a**

Revision History

Document Number	Effective Date	Action	Description
PMT2-DOP-CF-005, R1	5/10/12	Major Revision	• Updated Section 10, *References*. • Reformatted to latest DOP template format • Removed attachments on MASS instructions, PAFD and CSLA • Replaced MASS with LANMAS and WMS with WCATS. • Added LANL WAC to Sections 1.3 and 10.
PMT2-DOP-CF-005,R0	12/01/10	Extension	• Periodic review, no changes
PMT2-DOP-CF-005,R0	12/11/08	New Procedure	• Reformatted to IMP 300. • Supersedes NMT2-WI-009-CF-912,R2 and PMT2-IWD-WI-009-CF-912,R2.
NMT2-WI-009-CF-912,R2	08/25/06	Major Revision	• Added hazards and controls for Hazardous Chemicals, Regulated Waste, Handling Materials, Falls, Radiological Contamination, Pressurized Waste Containers, Sharp Objects, and Ergonomics. • Added details of storage for pH electrode. • Revised steps in Sections 5.1, 5.2, and 5.6. • Updated group names.
NMT2-WI-009-CF-912,R1	06/25/04	Major Revision	• Combined NMT2-WI-009-CF-905 with NMT2-WI-009-CF-912. • Revised and reformatted to conform to the new Work Instruction template.
NMT2-WI-009-CF-912,R0	12/11/01	New	• Transferred from NMT-7. • Supersedes NMT7-WI13-SOP-TA55-DP-04T.

Table of Contents

1.0 INTRODUCTION 4

1.1 Purpose 4
1.2 Scope and Applicability 4
1.3 Applicability 4
1.4 Technical Safety Requirements 4

2.0 PRECAUTIONS AND LIMITATIONS 5

2.1 General 5
2.2 Additional Requirements and Conditions (WR Use) 8

3.0 PREREQUISITE ACTION 9

3.1 Planning and Coordination 9
3.2 Performance Documents 9
3.3 Special Tools, Equipment, Parts, and Supplies 9
3.4 Field Preparation 9
3.5 Approvals and Notifications 9

4.0 ACCEPTANCE CRITERIA 9

5.0 PERFORMANCE 10

5.1 Retrieving the Solutions 10
5.2 Introducing Solutions into the Glovebox System and Transferring to CF 11
5.3 Examining and Certifying Non-EV Solutions 13
5.4 Adjusting the pH of Non-EV Solutions 15

6.0 POST-PERFORMANCE ACTIVITIES 19

6.1 Testing 19
6.2 Restoration 19
6.3 Results 19
6.4 Independent Verification 19
6.5 Records Processing 19

7.0 EMERGENCY ACTIONS 19

8.0 DEFINITIONS AND ACRONYMS 20

9.0 RESPONSIBILITIES 21

9.1 Waste Generator 21

10.0 REFERENCES 21

11.0 RECORDS 22

12.0 APPENDICES AND ATTACHMENTS 22

Attachment A, Performance Checklist 23

2.0 INTRODUCTION

2.1 Purpose

This Detailed Operation Procedure (DOP) identifies how non-evaporator solutions (any waste solution not from the evaporator (EV)) are acquired, treated and cemented by the Cement Fixation (CF) process. Acidic solutions require neutralization using sodium hydroxide (NaOH) to adjust them to the proper basic pH range for immobilization in cement. Basic pH solutions within the proper pH range may also be cemented. All non-EV solutions are treated and added to the drum before EV bottoms are added.

2.2 Scope and Applicability

This DOP is performed in PF-4 at TA-55 by NCO-2 personnel assigned to the CF process at location CF in room 401, the Shipping and Receiving Group unpacking room in the basement, and the Material Management Room (MMR) in room 414, or any other MMR.

2.3 Applicability

This procedure is intended to produce a cemented waste form that complies with the LANL Waste Acceptance Criteria (WAC) as defined in *LANL Waste Acceptance Criteria,* P930-1, and the Waste Isolation Pilot Plant (WIPP) WAC as defined in *Transuranic Acceptance Criteria for the Waste Isolation Pilot Plant*, DOE/WIPP-02-3122, for contact-handled waste.

The CF process and this procedure are subject to the quality assurance program plan specified in TA55-PLAN-046, *Quality Management Plan (QMP)* and 10 CFR 830, *Nuclear Safety Management Quality Assurance.*

This procedure is subject to the Central Characterization Project (CCP) procedure CCP-QP-016, *CCP Control of Measuring, Testing, and Data Collection Equipment.*

This procedure is intended to produce a cemented waste form that meets the Resource Conservation and Recovery Act (RCRA), definition of a non-mixed waste as defined 40 CFR, Parts 260 through 273, *Solid Waste*, as amended by the Hazardous and Solid Waste Amendments (HSWA). Hazardous waste regulation and enforcement in New Mexico is performed by the New Mexico Environmental Department (NMED) under 20 NMAC 4, New Mexico Hazardous Waste Act (NMHWA).

2.4 Technical Safety Requirements

Not Applicable

3.0 PRECAUTIONS AND LIMITATIONS

3.1 General

A. Pause/Stop Work

All workers are responsible for pausing or stopping work when they have a reasonable belief that quality, work risks or hazards are not effectively controlled and workers have the right to do so without fear of reprisal. LANL Policy P101-18 provides more information on the differences between pausing or stopping work and the process for resuming work in either case.

If this procedure cannot be completed as written or abnormal conditions are encountered, STOP, place the work in a safe configuration if possible, and notify the Operations Center (OC) and First Line Manager (FLM).

B. Hazards and Controls

Hazards and controls that are associated with this DOP are embedded in the procedural steps. The following table identifies those hazards and controls that are not tied to a specific step:

Hazard	Controls
Nuclear Criticality Accident: An inadvertent self-sustaining or divergent chain reaction that may release large amounts of neutron and gamma radiation causing serious injury or death.	• Operators of this process are trained to and comply with the applicable CSLA(s). See Section 10.0, References for applicable CSLA(s).
Ionizing Radiation and Contamination	• Radiation Protection Requirements are detailed in TA55-RD-555. • Follow radiological postings. • Radiological Control Technicians (RCTs) are notified to perform a radiation survey when transferring radioactive material that could cause a new radiation area or high radiation area to be created. • As Low as Reasonably Achievable (ALARA) principles are to be used (time, distance, and/or shielding) to minimize dose to workers. • Correct personnel protective equipment (PPE) is to be used. • Radiation Work Permits (RWPs) are required when dose rates ≥ 75 mrem/hr at 30 cm or ≥ 700 mrem/hr on contact.

B. Hazards and Controls (continued)

Hazard	Controls
Ergonomics: Awkward, reaching and static positions are encountered.	• Use caution. • Ask for assistance if necessary. • Take breaks.
Hazardous chemicals: • Exposure to hazardous chemicals and waste containing hazardous materials can result if containment (glovebox, gloves, etc.) is breached or if transfer lines leak. • Many of the wastes processed in the CF glovebox contain acids (nitric, hydrochloric, and sulfuric) and heavy metals (cadmium, chromium, and lead).	• Eye wash and shower are located within 100 feet of the glovebox. • Experienced and trained personnel make use of Material Safety Data Sheets (MSDS) to acquaint themselves with the chemicals that they are handling. • Personnel wear PPE (chemical resistant gloves, safety glasses, safety shoes, face shield, apron, etc.) appropriate to the material being handled. • Engineered containment (gloveboxes, pipes). • Frequent inspections of the Treatment, Storage, and Disposal (TSD) area keep NCO-2 personnel abreast of changing conditions. • During walk-arounds, personnel watch for evidence of leaks. • Hazardous and toxic materials are stored in appropriate containers with proper labels. • Personnel observe barriers in hazardous waste areas. • Follow guidelines in TA55-RD-539, *TA-55 Waste Management Requirements* and P409, *Waste Management.* • Formal hazardous waste training is mandatory.

B. Hazards and Controls (continued)

Hazard	Controls
Elevated workspace: The worker must step onto an elevated work platform to operate equipment. The platform is secured to the glovebox stand with a mechanism that allows the platform to be removed during drum-out. There is also an elevated walkway behind the glovebox. • When entering or leaving the elevated work surface, workers may fall or stumble. • If detached from the glovebox, the stand may roll away from the glovebox with workers on it.	• Signs are posted to alert personnel to the tripping hazard. • When in elevated areas, personnel should use appropriate caution. • When working on the elevated platforms, workers should make sure the platforms are attached to the glovebox.
Regulated Waste: This work takes place within the TSD Unit. A TSD Unit is a permitted or interim status hazardous waste management unit where hazardous or mixed waste regulated by the Resource Conservation and Recovery Act (RCRA) may be stored or treated before disposal.	• The CF process operates as a TSD Unit and must comply with New Mexico State-regulated requirements for operation and inspection. Requirements include inspections to ensure safe operation. The inspection procedure is found in PMT2-DOP-CF-009, *Inspection of Treatment, Storage, and Disposal Units for Cement Fixation and Tank Storage*. • Manage waste in compliance with regulations. Specific waste controls are available at http://int.lanl.gov/environment/waste/. Additional waste management information is available at http://swrc.lanl.gov. • Plan 256: RCRA Hazardous/Mixed Waste Worker Training • During walk-arounds, personnel watch for evidence of leaks. • pH adjustment and/or cementation removes the corrosivity and toxicity from the waste being treated.

C. Unique Entry Conditions

Not Applicable

2.1 General (continued)

D. Sequence of Steps

The steps in the Performance section are to be performed in sequence unless otherwise stated.

E. Criticality Safety Limit Approval (CSLA) Requirements

See Applicable CSLAs.

F. Required Permits

- New Mexico Environmental Division (NMED) Permit to operate as a TSD unit.
- Radiation Work Permits (RWPs) are required when dose rates ≥ 75 mrem/hr at 30 cm or ≥ 700 mrem/hr on contact.

G. Training and/or Qualifications

Operators must be qualified to this procedure or in supervised qualification on this procedure. Operator qualification is documented on the Performance Checklist, Attachment A.

H. Cautions

Not applicable

I. Material Control and Accountability

This procedure complies with the *LANL Nuclear Material Control and Accountability Procedural Handbook* and TA55-RD-585, *Nuclear Materials Control and Accountability Requirements.* Receipt or shipment of material is accompanied by appropriate Los Alamos Nuclear Material Accountability System (LANMAS) transactions and manifests.

Because the drum is attached to the GB system, to prevent any unauthorized personnel from diverting nuclear material out through a cemented drum, the process operation also requires the following:

- If the cementation GB is unattended, it is locked. Only the CF and Evaporator (EV) operations have keyed access to DB-424 in PF-4. The CF GB has a combination lock, the combination to which is known only by CF personnel.
- When the CF process is running, two personnel must be present.

3.2 Additional Requirements and Conditions (WR Use)

Not applicable.

4.0 PREREQUISITE ACTION

4.1 Planning and Coordination

[1] Ensure that a pre-job brief has been conducted in accordance with TA55-DOP-001, *Pre-Job Briefing and Post Job Review.*

[2] Obtain permission from the Operations Center [TA55], if applicable, before conducting a Technical Safety Requirement (TSR) or In-Service Inspection (ISI) surveillance.

[3] Schedule the work with the Facility Operations Director (FOD) organization.

[4] Ensure that tool, equipment, and material numbers in the work area match those specified.

[5] Coordinate with Shipping and Receiving for the appropriate time to retrieve the waste solutions from the unpacking room.

4.2 Performance Documents

Not Applicable

4.3 Special Tools, Equipment, Parts, and Supplies

- silicon defoamer (General Electric #9120 or equivalent)
- sodium hydroxide (~9 molar NaOH, piped to glovebox)
- nitric acid (concentrated)
- calibrated pH meter and electrode
- 250-ml beaker for taking pH
- Tygon® tubing, 3/8-in. inner diameter, thick wall
- cutting tool to remove bags from waste containers

4.4 Field Preparation

Not Applicable

4.5 Approvals and Notifications

Not Applicable

5.0 ACCEPTANCE CRITERIA

Not Applicable

6.0 PERFORMANCE

6.1 Retrieving the Solutions

NOTE Liquids containing organic compounds that are soluble in water are allowed to be cemented as long as they do not exhibit the Resource Conservation and Recovery Act (RCRA) definition of ignitability, which is a flash point of ≤140 degrees F. Organic solutions that are not soluble in water are prohibited from treatment in the CF process.

[1] Obtain a LANMAS printout of the items,
AND make sure they have the same values as that on the WCATS.

[a] IF the LANMAS printout does NOT have the same values,
THEN investigate further to resolve the discrepancy.

NOTE The location where the items are to be retrieved will typically be the Shipping and Receiving Group unpacking room in the PF-4 basement, but may also be a Material Management Room (MMR).

[2] Obtain a wagon or 2-tray cart,
AND take it to where the items are to be retrieved.

WARNING

Hazard: Pressurized containers: Unvented bottles of SNM can build up flammable concentrations of hydrogen gas that can ignite if there is an ignition source such as static charge.

Controls:
- **Inspect the bags and solution containers for pressurization. If pressurization is found, do not move the item and contact your supervisor immediately.**
- **Solution bottles have vented lids.**
- **Place containers with SNM in well-ventilated areas.**

[3] As you take each item, compare the label information with that on the LANMAS printout to verify that it is the correct item.

[a] IF the information does NOT match, (ex. added material types),
THEN

1. Do not take the item.

2. Notify your supervisor.

[4] As you take each item, ensure that there are no leaks and the tamper-indicating device (TID) is still intact.

[5] Leave each bottle in the carrier in which it was stored,
AND put it on the cart.

[6] To introduce the items into the glovebox system, take the cart with the items on it to one of the MMRs in the 400 area.

6.2 Introducing Solutions into the Glovebox System and Transferring to CF

NOTE Item introduction will typically take place in the room 414 MMR. However, introduction may also take place in other MMR's or into the CF glovebox at the time of drum-in via an empty drum.

[1] Notify an RCT that you are introducing bottles into the glovebox system.

[a] Wait until the RCT is present before you proceed.

[2] Tear off the tape seal on the solution carrier,
AND document per the TID Program.

WARNING

Hazard: Radiological contamination: A leaking item can result in radiological contamination.

Control: If a carrier has a leak, leave it and inform room personnel immediately.

[3] As you remove each item from the solution carrier, check for bottle leakage around the cap or through a crack.

[4] IF a bottle is cracked or leaking,
THEN put the bottle back into the solution carrier,
AND proceed as follows:

[a] IF decontamination of the outside of the carrier is necessary,
THEN follow the instructions of the RCT.

[b] Mark the outside of the solution carrier to indicate the bottle is leaking.

NOTE Rejected bottles must be sealed in accordance with the TID Program, and must sufficiently contain the leak with additional bagging.

[c] Follow RCT instructions,
AND contact your supervisor for further guidance.

[5] Check for the following conditions on non-leaking bottles:

[a] Note whether there is any liquid separation (layers) or any obvious solids mixed with the liquids.

[b] Ensure that the SNM value on the bottle label is the same as the value on WCATS and the LANMAS printout.

[c] Verify that the item meets the current discard limit (DL).

[d] Ensure that the approximate volume is as stated on the LANMAS printout.

[6] IF the item does NOT meet the conditions in Step **[5]**,
THEN return it to the solution carrier,
AND notify your supervisor.

5.2 Introducing Solutions into the Glovebox System and Transferring to CF (continued)

WARNING 1

Hazard: **Falls: The worker may introduce the bottles into the room 414 glovebox system through an entry point that requires a ladder or elevated platform to access it.**

Controls:
- **When in elevated areas, workers should use appropriate caution.**
- **If a rollable work platform is used, make sure it is anchored in place.**
- **Plan 3950: Ladder Safety**

WARNING 2

Hazard: **Radioactive contamination: Introducing waste bottles into the glovebox system through the port into the room 414 dropbox may result in release of contamination.**

Controls:
- **An RCT must be present during introduction of waste items into the glovebox system.**
- **All workers in room 414 must wear a full-face respirator while the port door is open.**

[7] Introduce the items into the glovebox line, which is usually through the port in the glovebox in room 414.

[8] Have an RCT monitor the cart or wagon and the solution carriers in the MMR.

[a] The RCT attaches an *Empty* tag to the solution carriers.

[b] Return the wagon or 2-tray cart and the solution carriers back to the area where they are stored.

NOTE Inspection and certification of the waste solutions typically takes place in a CF dropbox (DB).

[9] Perform the following steps associated with introducing the item into the GB line and transferring it via trolley to the CF DB or any other GB or DB.

[a] Following TA55-DOP-016, *TA-55 Material Transfer Procedure,* determine the quantity of SNM that is currently present in the destination. LANMAS may be used as an aid for this determination.

[b] Before physically moving fissile material, check that the transfer will not cause the criticality safety limits to be exceeded in the destination workstation or other workstations en route. Use LANMAS to aid in determining compliance.

5.2 Introducing Solutions into the Glovebox System and Transferring to CF (continued)

[c] Unlock trolley station #1 in room 401 at the CF dropbox DB-424, AND transfer the waste solutions to that dropbox station. (See TA55-DOP-024, *Trolley Hoist Conveying System*.)

[d] When the transfer is complete, lock out trolley station #1.

[10] IF you leave the CF glovebox unattended and the EV personnel need to use the dropbox DB-424,
THEN move all waste items into the CF glovebox,
AND lock the door between the dropbox and CF glovebox.

6.3 Examining and Certifying Non-EV Solutions

NOTE For items not generated by the analytical chemistry group, but generated inside the glovebox system, steps **[1]** – **[4]** are to be performed. These steps for inspection and certification of an item typically take place in the generator's GB.

[1] Based on information obtained from the generator (or in the case that CF is the generator, from LANMAS or the vault feed list) record in the CF logbook all identifying information for the item including ID #, Process/Status, matrix, RCRA-hazardous characteristics and generator contact information.

[2] Observe the generator take the solution sample that they will submit to the Analytical Chemistry Group for analysis.

[3] Have the generator close the container, tape the top of the container closed with vinyl tape, and label the container with the item ID. As CF examiner, initial the tape where it overlaps.

[4] When the generator receives the assay, the item can be accepted by the CF process for inspection, certification and cementation. Perform actions listed in Steps **[9a]**, **[9b]**, **[9c]** and **[9d]** in Section **5.2** to bring the item(s) to the CF DB.

5.3 Examining and Certifying Non-EV Solutions (continued)

WARNING 1

Hazard: **Pressurized containers: Unvented bottles of SNM can build up flammable concentrations of hydrogen gas that can ignite if there is an ignition source such as static charge.**

Controls:
- **Inspect the bags for pressurization. If pressurization is found, do not move the item and contact your supervisor immediately.**
- **Vent the solution bottles by loosening the caps.**
- **Solution bottles should have vented lids.**
- **Place bottles with SNM in well-ventilated areas.**

WARNING 2

Hazard: **Radiological contamination and Cutting injury: The use of a knife or similar tool to cut bags from around waste bottles can result in cutting of the glovebox glove and release of contamination, as well as cutting of the worker.**

Controls:
- **Cover and store sharp objects, such as razor blades, in a safe place.**
- **Use caution and cut away from your body.**

[5] In dropbox DB-424 (D-420), remove the bags from the bottles by using a knife or similar tool.

[6] Place the bags in a suitable area for later disposal.

NOTE In some cases, CF personnel need to enter the WCATS information, such as when the generator is unknown or when the CF process is the generator.

[7] IF information is missing in WCATS,
THEN contact the generator to complete the information.

[8] As generator, input each bottle's identification and characterization data into WCATS.

[9] If an item does NOT meet the Discard Limit (DL) concentration, select the proper discard justification memo from the list in WCATS.

[10] Sign off on WCATS that the item is certified.

[11] Log on to LANMAS,
AND verify that solution information is the same as on WCATS.

[a] IF there is a discrepancy,
THEN notify your supervisor.

6.4 Adjusting the pH of Non-EV Solutions

[1] Enter the drum identification information in WCATS.

[2] Perform and enter the pH electrode calibration information into WCATS according to PMT2-DOP-CF-006, *pH Adjustment of Evaporator Bottoms for Cement Fixation*.

[3] As part of criticality safety associated with moving the items into the CF glovebox, perform the following:

- **[a]** Following TA55-DOP-016, *TA-55 Material Transfer Procedure,* determine the quantity of SNM that is currently present in the destination.
- **[b]** Before physically moving fissile material, check that the transfer will NOT cause the criticality limits to be exceeded in the destination workstation. Use LANMAS to aid in determining compliance.
- **[c]** Ensure that the criticality tag board accurately represents the amount of SNM that is currently in the glovebox location to be used.
- **[d]** Move the waste solutions into the CF glovebox and next to the pH-adjustment column.
- **[e]** Update the criticality tag board to accurately represent the amount of SNM that is now in the glovebox location.

CAUTION

To prevent the Tygon® tube from coming out of the solution during vacuuming and overflowing into the vacuum trap, hold the tube inside the solution container during the vacuum transfer. Throttle the vacuum valve as needed to control the amount of vacuum.

[4] Transfer the solutions into the pH-adjustment column by the following steps:

- **[a]** Remove the cap on the solution container cap,
  AND place the Tygon® tube from the column discharge line into the solution.
- **[b]** Put a vacuum on the column,
  AND open the valve on the discharge line to pull the solution into the column.
- **[c]** Perform this transfer for all solution items.

5.4 Adjusting the pH of Non-EV Solutions (continued)

WARNING

Hazard: Rad contamination and Pinching: Manual valve operation presents a pinch hazard and can lead to a contamination release from a glove tear and a pinching injury.

Control: When operating the ball valves in the glovebox, do not pinch the gloves between the valve stop point and the handle to avoid cutting the gloves.

CAUTION 1

Do not store HCl solutions in the glass pH-adjustment column because they may cause corrosion of the stainless-steel components. Transfer them to the drum as soon as possible.

CAUTION 2

Throttle the vacuum valve as needed to control the amount of sparging so that the solution does not overflow into the vacuum trap.

[5] Begin sparging the solution in the pH-adjustment column by placing a vacuum on the column and cracking the column discharge valve to bring air into the bottom of the column.

[a] Keep sparging during the pH adjustment, except as noted.

[6] Open the sodium hydroxide valve beside the glass column,
AND add a small volume of sodium hydroxide to the sparging solution.

- Watch for foaming. If necessary, add small amounts of defoamer (about 20 ml at a time) by vacuuming it through the discharge line.
- Control sparging to prevent overflow.

[7] Obtain a representative sample for pH check by doing the following:

[a] Close the column discharge valve and vacuum valve.

[b] Open the column vent valve to stop sparging,
AND vent the column.

[c] Open the discharge valve,
AND fill a beaker with solution through the Tygon® tubing attached to the discharge line,
THEN close the discharge valve.

[d] To flush out the line, vacuum the solution back into the column by performing the following:

1. Close the vent valve.

2. Open the vacuum valve.

3. Open the discharge valve.

5.4 Adjusting the pH of Non-EV Solutions (continued)

[e] Repeat step **[7c]** to collect solution for the pH determination. Have enough solution in the beaker to cover the glass bulb at the end of the electrode.

WARNING

Hazard: Radiological contamination and Cutting: The electrode has a glass bulb on its end. If the electrode is struck or falls during use, the bulb may be broken and result in a contamination release from a glove breach and a cutting.

Controls:
- **Carefully handle the electrode to avoid breaking the glass bulb on the end.**
- **When replacing a broken electrode, avoid cutting the glovebox glove.**

[8] Using the calibrated pH electrode, obtain the pH of the solution. The target pH range is 9.5 to 11.5.

[9] Vacuum the sample solution back into the glass column as in Step **[7d]** and begin sparging the solution.

[10] Use the following instructions for pH adjustment:

[a] IF the pH is below the target range,
THEN

1. Add a small amount of sodium hydroxide to the sparging solution.

2. Repeat Steps **[6]** – **[9]** above as necessary to obtain the correct pH.

[b] IF the pH is above the target range,
THEN further pH adjustment is NOT required.

5.4 Adjusting the pH of Non-EV Solutions (continued)

WARNING

Hazard: **Radiological contamination: Compressed air is used to transfer waste solutions from the pH adjustment column to the 55-gal drum. Excessive pressure has the potential to overpressurize the glovebox or damage the glass column.**

Controls:
- **Adjust the air pressure to the glass column to ≤6 psi at the regulator. A photohelic switch monitors air pressure within the glovebox, and, if pressurization is detected, automatically closes the compressed air line**
- **The pH-adjustment column has a pressure relief valve to vent the column at ≥10 psi.**

[11] Discharge the contents of the column to the drum as follows:

NOTE The hose is to be adequately secured using fittings as necessary to prevent the hose from coming off during the transfer.

[a] Connect Tygon® tubing from the column discharge to the drum.

[b] Open the compressed air valve underneath the glovebox.

[c] Close the column vent valve and the column vacuum valve, AND open the air valve to the column.

[d] Open the column discharge valve to transfer column contents to the drum.

[e] When the discharge is nearly completed, turn off the compressed air valve to the column.

[f] Let the air pressure in the column vent completely through the discharge hose to clean it out.

[g] Close the column discharge valve.

[h] Open the column vent valve.

[12] Update WCATS.

[13] Proceed to PMT2-DOP-CF-006, *pH Adjustment of Evaporator Bottoms for Cement Fixation,* for the next step of adding EV solution to the drum.

7.0 POST-PERFORMANCE ACTIVITIES

7.1 Testing

Not Applicable

7.2 Restoration

Not Applicable

7.3 Results

[1] Record information for the item and the drum in the CF logbook and in WCATS.

7.4 Independent Verification

Not Applicable

7.5 Records Processing

[1] See Section 11.0 Records

8.0 EMERGENCY ACTIONS

[1] If a site emergency develops, follow TA55-AP-018, *TA-55 Emergency Procedures.*

[2] No actions will be taken in response to an emergency beyond those prescribed in TA55-PLAN-007, *TA-55 Facility Emergency Plan*. They involve evacuating the area and calling the OC (55-911), then Emergency 911.

[3] In case of physical injury, call the OC at 55-911 or 7-3330 and request the Emergency Response Team.

9.0 DEFINITIONS AND ACRONYMS

Term	Definition
ALARA	as low as reasonably achievable
CCP	Central Characterization Project
CF	cement fixation
CFR	code of federal regulations
CSLA	criticality safety limit approval
DB	dropbox
DL	discard limit
DOP	detailed operating procedure
EV	evaporator
FLM	first line manager
FOD	facility operations director
GB	Glovebox
HSWA	Hazardous and Solid Waste Amendments
ISI	In-Service Inspection
LANMAS	Los Alamos Nuclear Material Accountability System
MMR	material management room
MSDS	Material Safety Data Sheet
NaOH	sodium hydroxide
NMED	New Mexico Environmental Department
NMHWA	New Mexico Hazardous Waste Act
OC	operations center
PF	plutonium facility
PPE	personal protective equipment
psi	pounds per square inch
RCRA	Resource Conservation and Recovery Act
RCT	radiological control technician
RWP	radiological work permit
SNM	special nuclear material
TID	tamper-indicating device
TSD	treatment, storage and disposal
TSR	Technical Safety Requirement
TRU	transuranic
WAC	Waste Acceptance Criteria
WIPP	Waste Isolation Pilot Plant
WCATS	Waste Compliance and Tracking System

10.0 RESPONSIBILITIES

10.1 Waste Generator

- Responsible for providing non-EV solution in proper form and in approved container.
- Responsible for presenting the solution item to the CF Process Operator for visual inspection and observation of sampling for analytical results.

11.0 REFERENCES

Document Number	Title
	LANL Nuclear Material Control and Accountability Procedural Handbook
10 CFR 830	*Code of Federal Regulations - Nuclear Safety Management Assurance*
20 NMAC 4	*New Mexico Hazardous Waste Act (NMHWA)*
40 CFR, Parts 260 - 273	*Code of Federal Regulations - Solid Waste*
CCP-QP-016	*CCP Control of Measuring, Testing, and Data Collection Equipment*
DOE/WIPP-02-3122	*Transuranic Waste Acceptance Criteria for the Waste Isolation Pilot Plant*
NCS-CSLA-10-062	*Cementation Glovebox GB454*
NCS-CSLA-10-124	*(DB424) Inspection Activities of PF-4 Vault Particulate Waste Items*
P101-18	*Procedure for Pause/Stop Work*
P409	*Waste Management*
P930-1	*LANL Waste Acceptance Criteria*
PMT2-DOP-CF-006	*pH Adjustment of Evaporator Bottoms for Cement Fixation*
PMT2-DOP-CF-009	*Inspection of Treatment, Storage, and Disposal Units for Cement Fixation and Tank Storage*
TA55-AP-018	*TA-55 Emergency Procedures*
TA55-DOP-001	*Pre-Job Briefing and Post-Job Review*
TA55-DOP-016	*TA-55 Material Transfer Procedure*
TA55-DOP-024	*Trolley Hoist Conveying System*
TA55-PLAN-007	*TA-55 Facility Emergency Plan*
TA55-PLAN-046	*Quality Management Plan (QMP)*
TA55-RD-539	*TA-55 Waste Management Requirements*
TA55-RD-555	*TA-55 Radiation Protection Requirements*
TA55-RD-585	*Nuclear Materials Control and Accountability Requirements*

12.0 RECORDS

Record Identification	Record Type Determination	Protection/Storage Methods	Processing Instructions
CF Logbook	Written process data record	Records shall be maintained at the CF process location.	When the records are ready for final disposition, the record is transferred to Records Management in accordance with procedure.
Attachment A, *Performance Checklist*	Training record	Filed with training specialist.	

13.0 APPENDICES AND ATTACHMENTS

Attachment	Title
A	Performance Checklist

Attachment A, Performance Checklist

Page 1 of 2

Course:	**Session:**

Procedure No.: PMT2-DOP-CF-005, R1 Title: Non-evaporator Solution Operations for Cement Fixation

Task Hazard Level ☐ Minimal ☐ Low ☒ Medium ☐ High ☐ Mission-critical

Worker's Name: _____ Z number _____

☐ Worker has completed the following training prerequisites _____
(Verifier's name and Z number)

☐ _____ ☐ _____

☐ _____ ☐ _____

☐ _____ ☐ _____

☐ _____ ☐ _____

☐ _____ ☐ _____

Task #	Emergency Actions	Instruction	Evaluation
1	Describe the response to an emergency shutdown.	☐	☐
	Comments		
Task #	**Hazards and Controls**	**Instruction**	**Evaluation**
1	Describe the hazard associated with nuclear criticality and how to minimize it.	☐	☐
2	Describe the hazard associated with ionizing radiation and how to minimize it.	☐	☐
3	Describe the hazard associated with alpha contamination and how to minimize it.	☐	☐
4	Describe the hazard associated with the elevated work platform and how to control it.	☐	☐
5	Describe the hazard of working with hazardous chemicals and how to control it.	☐	☐
6	Describe the ergonomic hazard and how to control it.	☐	☐
	Comments		

Attachment A, Performance Checklist

Page 2 of 2

Task #	Procedural Steps	Instruction	Evaluation
1	Demonstrate and/or discuss how to retrieve the non-evaporator solutions	☐	☐
2	Demonstrate and/or discuss how to introduce the non-evaporator solutions into the trolley system and transfer them to the CF GB.	☐	☐
3	Demonstrate and/or discuss how to examine and certify non-evaporator solutions	☐	☐
4	Demonstrate and/or discuss how to verify the sampling of non-evaporator solutions requiring analytical results.	☐	☐
5	Demonstrate and/or discuss how to adjust the pH of non-evaporator solutions	☐	☐
	Comments		

Signature Approvals

Worker's Name (Last, First, Middle Init.)	**Signature**	**Z #**	**Group**	**Date**

(Your signature indicates that you are confident to safely and independently perform work relative to this procedure.)

Instructor's Name (Last, First, Middle Init.)	**Signature**	**Z #**	**Group**	**Date**

(Your signature indicates that you are confident that the worker indicated above is adequately prepared for a performance evaluation.)

Evaluator's Name (Last, First, Middle Init.)	**Signature**	**Z #**	**Group**	**Date**

(Your signature indicates that you are confident that the worker indicated above has been adequately trained to safely and independently perform work relative to this procedure.)

PMT2-DOP-CF-006, R1 pH Adjustment of Evaporator Bottoms for Cement Fixation

LA-UR-14-24713

Extended Until 6/24/15 per Memo MET-DO:13-08. Extension request was approved by Jeff Yarbrough on 06/24/13.

MET-1

Detailed Operating Procedure

Approval Cover Sheet

Document number:	PMT2-DOP-CF-006, R1
Effective date:	2/29/12
Next review date:	2/29/14
Supersedes:	PMT2-DOP-CF-004,R0

Title: pH Adjustment of Evaporator Bottoms for Cement Fixation

Status:	Hazard:	For Document Control Use Only:
☐ New	☐ Low-hazard	
☒ Major revision	☒ Moderate-hazard	
☐ Minor revision	☐ High-hazard/complex	
☐ Review, no change	**Use Type:**	
	☒ Reference ☒ Use every Time (Attachments A and B only)	
	☐ WR (Use every Time)	

	Organization	Date	Signature
Approved for Use By:			
Operations: Georgette Ayers	NCO-2	2/27/12	SIGNATURE ON FILE
Authorized for Use By:			
Operations Responsible Line Manager: Jennifer Butler	NCO-2	2/27/12	SIGNATURE ON FILE
Authorized for Use By:			
FOD/Operations Manager: Chuck Tesch	TA55-OPS	2/27/12	SIGNATURE ON FILE

Approved by:

	Organization	Date	Signature
Approved for Use By:			
SME: Gerald Veazey	MET-1	2/2/12	SIGNATURE ON FILE
Authorized for Use By:			
Group Leader: Kent Abney	MET-1	2/23/12	SIGNATURE ON FILE

Approved by:

Design Agency Liaison: ***Date***	***Process Owner:*** ***Date***
Quality Assurance: ***Date***	***SME:*** ***Date***

☒ Unclassified ☐ Restricted Data	**Derivative Classifier:**
☐ Confidential ☐ Formerly Restricted Data	**Name: Steve Willson (signature on file)**
☐ Secret ☐ National Security Information	**Title: Scientist-3 Date: 2/29/12**
☐ Unclassified Controlled Nuclear Information	
☐ Official Use Only	**Derived from: N/A**

Revision History

Document Number	Effective Date	Action	Description
PMT2-DOP-CF-006,R1	2/29/12	Major Revision	• Reformatted to latest DOP template format • Removed attachments on MASS instructions, PAFD and CSLA • Replaced MASS with LANMAS and WMS with WCATS. • Combined PMT2-DOP-CF-004,R0 and PMT2-DOP-CF-006,R0 • Supersedes PMT2-DOP-CF-004,R0
PMT2-DOP-CF-006,R0	12/01/10	Extension	• Periodic review, no changes
PMT2-DOP-CF-006,R0	12/11/08	New Procedure	• Reformatted to IMP 300. • Supersedes NMT2-WI-009-CF-911,R2 and NMT2-IWD-WI-009-CF-911,R3.
NMT2-WI-009-CF-911,R2	08/18/06	Major revision	• Added hazards and controls for Regulated Waste • Revised steps in Sections 5.2, 5.3, and 5.5 • Revised the Performance Checklist
NMT2-WI-009-CF-911,R1	05/19/06	Extension	
NMT2-WI-009-CF-911,R1	05/20/04	Major revision	• Revised and reformatted to conform to the new Work Instruction template • Changed the title • Added new hazard controls
NMT2-WI-009-CF-911,R0	01/09/02	New	• Transferred from NMT-7 • Supersedes NMT7-WI8-SOP-TA55-DP-04

Table of Contents

1.0 INTRODUCTION 4

1.1 Purpose 4
1.2 Scope and Applicability 4
1.3 Applicability 4
1.4 Technical Safety Requirements 4

2.0 PRECAUTIONS AND LIMITATIONS 5

2.1 General 5
2.2 Additional Requirements and Conditions (WR Use) 9

3.0 PREREQUISITE ACTION 9

3.1 Planning and Coordination 9
3.2 Performance Documents 9
3.3 Special Tools, Equipment, Parts, and Supplies 10
3.4 Field Preparation 10
3.5 Approvals and Notifications 10

4.0 ACCEPTANCE CRITERIA 10

5.0 PERFORMANCE 11

5.1 Calibrating to pH 7 and pH 10 Buffer Solutions 11
5.2 Preparing to Transfer EV Bottoms to the Glass Column 13
5.3 Adjusting the pH of a Representative Sample 15
5.4 Transferring EV Bottoms to the Drum 18
5.5 Final pH Adjustment in the Drum 21

6.0 POST-PERFORMANCE ACTIVITIES 24

6.1 Testing 24
6.2 Restoration 24
6.3 Results 24
6.4 Independent Verification 24
6.5 Records Processing 24

7.0 EMERGENCY ACTIONS 24

8.0 DEFINITIONS AND ACRONYMS 24

9.0 RESPONSIBILITIES 25

10.0 REFERENCES 26

11.0 RECORDS 27

12.0 APPENDICES AND ATTACHMENTS 27

Attachment A, CF Storage Tank Log Sheet 27
Attachment B, Cement Run Sheet 29
Attachment C, Performance Checklist 30

1.0 INTRODUCTION

1.1 Purpose

This Detailed Operating Procedure (DOP) first describes how to calibrate and maintain the pH electrode and equipment that is used to measure and adjust the pH of evaporator (EV) bottoms waste solution. This DOP then identifies how evaporator (EV) bottoms are pH adjusted and added to a drum for immobilization in cement.

1.2 Scope and Applicability

This procedure is performed at TA-55, PF-4, Room 401, location CF by NCO-2 personnel assigned to the Cement Fixation (CF) process.

1.3 Applicability

This procedure is intended to produce a cemented waste form that complies with the Waste Isolation Pilot Plant (WIPP) Waste Acceptance Criteria as defined in *Transuranic Waste Acceptance Criteria for the Waste Isolation Pilot Plant*, DOE/WIPP-02-3122, for contact-handled TRU waste.

The CF process and this procedure are subject to the quality assurance program plan specified in TA55-PLAN-046, *Quality Management Plan (QMP)* and 10 CFR 830, *Nuclear Safety Management Quality Assurance.*

This procedure is subject to the Central Characterization Project (CCP) procedure CCP-QP-016, *CCP Control of Measuring, Testing, and Data Collection Equipment.*

This procedure is intended to produce a cemented waste form that meets the Resource Conservation and Recovery Act (RCRA), definition of a non-mixed waste as defined 40 CFR, Parts 260 through 273, *Solid Waste*, as amended by the Hazardous and Solid Waste Amendments. Hazardous waste regulation and enforcement in New Mexico is performed by the New Mexico Environmental Department (NMED) under 20 NMAC 4, New Mexico Hazardous Waste Act.

1.4 Technical Safety Requirements

Not Applicable

2.0 PRECAUTIONS AND LIMITATIONS

2.1 General

A. Pause/Stop Work

All workers are responsible for pausing or stopping work when they have a reasonable belief that quality, work risks or hazards are not effectively controlled and workers have the right to do so without fear of reprisal. LANL Policy P101-18 provides more information on the differences between pausing or stopping work and the process for resuming work in either case.

B. Hazards and Controls

Hazards and controls that are associated with this DOP are embedded in the procedural steps. The following table identifies those hazards and controls that are not tied to a specific step:

Hazard	Controls
Nuclear Criticality Accident: An inadvertent self-sustaining or divergent chain reaction that may release large amounts of neutron and gamma radiation causing serious injury or death.	• Process specific controls (administrative requirements and engineered features) are detailed on the applicable Criticality Safety Limit Approvals (CSLA) associated with this operation. See Section 10.0, References, for a listing of the applicable CSLA(s).
Ionizing Radiation and Contamination	• Radiation Protection Requirements are detailed in TA55-RD-555. • Follow radiological postings. • Radiological Control Technicians (RCTs) are notified to perform a radiation survey when transferring radioactive material that could cause a new radiation area or high radiation area to be created. • As Low as Reasonably Achievable (ALARA) principles are to be used (time, distance, and/or shielding) to minimize dose to workers. • Correct personnel protective equipment (PPE) is to be used. • Radiation Work Permits (RWPs) are required when dose rates ≥ 75 mrem/hr at 30 cm or ≥ 700 mrem/hr on contact.

B. Hazards and Controls (continued)

Hazard	Controls
Regulated Waste: The CF process operates as a Treatment, Storage, and Disposal (TSD) Unit. A TSD Unit is a hazardous waste management unit where hazardous or mixed waste regulated by the RCRA may be stored or treated before disposal.	• The CF process must comply with New Mexico State-regulated requirements for TSD Unit operation, including inspections to ensure safe operation. The inspection procedure is found in PMT2-DOP-CF-009, *Inspection of Treatment, Storage, and Disposal Units for Cement Fixation and Tank Storage*. • Manage waste in compliance with regulations. Specific waste controls are available at http://int.lanl.gov/envoronmental/waste. Additional waste management information is available at http://swrc.lanl.gov. • Plan 256: RCRA Hazardous/Mixed Waste Worker Training. • During walk-arounds, watch for evidence of leaks.
Hazardous chemicals: • Exposure to hazardous chemicals and waste containing hazardous materials can result if containment (GB, gloves, etc.) is breached or if transfer lines leak. • Many of the wastes processed in the CF glovebox contain corrosive (acid) and toxic (heavy metals) materials.	The controls provided by TA55-RD-555, *TA-55 Radiation Protection Requirements,* are effective in preventing exposure to hazardous chemicals. To minimize the hazards from dangerous chemicals: • Eye wash and shower are located within 100 feet of the GB. • Experienced and trained personnel make use of Material Safety Data Sheets (MSDS) to acquaint themselves with chemicals they are handling. • Wear PPE (chemical resistant gloves, safety glasses, safety shoes, etc.) appropriate to the material being handled. • Engineered containment (glovebox, pipes). • Frequent inspection of the Treatment, Storage, and Disposal (TSD) area to keep personnel abreast of changing conditions. • During walk-arounds, evidence of leaks is looked for. • Hazardous and toxic materials are stored in appropriate containers with proper labels. • Barriers observed in hazardous waste areas. • Guidelines are followed in TA55-RD-539, • *TA-55 Waste Management Requirements* and P409, *Waste Management.* • Formal hazardous waste training is mandatory.

B. Hazards and Controls (continued)

Hazard	Controls
Elevated workspace: Personnel must step onto an elevated work platform to operate GB equipment. The stand is secured to the GB with a mechanism that allows the platform to be removed for access to the drum during drum-out. There is also an elevated walkway behind the GB. • When entering or leaving the platform or walkway, personnel may trip, fall or stumble. • If detached from the GB, the platform may roll away while personnel are on it.	• Before climbing onto the rollable elevated work stand, attach it to the GB stand. • Signs are posted to alert personnel to the tripping hazard. • When in elevated areas, personnel should use appropriate caution.
Ergonomics: Awkward, reaching and static positions are encountered.	• Use caution. • Ask for assistance if necessary. • Take breaks.
Beryllium (Be) Hazard: • Some waste solutions from the Pu-Be program can contain trace amounts of Be. Be is a carcinogen and is known to cause acute health effects. In particular, inhaling Be particulate may cause a serious, chronic lung disease called Chronic Beryllium disease. • The presence of Be in can also result in elevated dose rates, although this effect is usually only considered a problem when Be is in solution form.	• Be in EV bottoms solution is not in a respirable form. • The engineered structures (gloveboxes) and PPE used to control radiological hazards in PF-4 (coveralls, safety glasses, gloves and booties) is sufficient for Be hazards. • Additional shielding is used if the RCT determines an elevated dose rate is present.

2.1 General (continued)

C. Unique Entry Conditions

Not Applicable

D. Sequence of Steps

The steps in the Performance section are to be performed in sequence unless otherwise stated.

E. Criticality Safety Limit Approval (CSLA) Requirements

See the following Criticality Safety Limit Approval (CSLA) document for requirements.

- NCS-CSLA-10-062 *Cementation Glovebox GB454*

Administrative Requirements	
Pu in solution/cemented waste/particulate	≤520 grams Pu total. No more than 200 grams Pu per drum

- NCS-CSLA-10-061 *FT Tanks at Location CF*

Administrative Requirements	
Pu	Pu in EV liquid waste solution

F. Required Permits

NMED Permit to operate as a TSD Unit

G. Training and/or Qualifications

Operators must be qualified to this procedure or in supervised qualification on this procedure. Operator qualification is documented on Attachment C, *Performance Checklist*.

H. Cautions

Not applicable

2.1 General (continued)

I. Material Control and Accountability

This procedure complies with the LANL Nuclear Material Control and Accountability Procedural Handbook and TA55-RD-585, *Nuclear Materials Control and Accountability Requirements.* Receipt or shipment of material is accompanied by appropriate Los Alamos Nuclear Material Accountability System (LANMAS) transactions and manifests.

Because the drum is attached to the GB system, to prevent any unauthorized personnel from diverting nuclear material out through a cemented drum, the process operation also requires the following:

- If the cementation GB is unattended, it is locked. Only the CF and EV operations have keyed access to DB-424 in PF-4. The CF GB has a combination lock, the combination to which is known only by CF personnel.
- When the CF process is running, two personnel must be present.

2.2 Additional Requirements and Conditions (WR Use)

Not applicable.

3.0 PREREQUISITE ACTION

3.1 Planning and Coordination

[1] Ensure that a pre-job brief has been conducted in accordance with TA55-DOP-001, *Pre-Job Briefing and Post Job Review.*

[2] Obtain permission from the Operations Center [TA55], if applicable, before conducting a Technical Safety Requirement (TSR) or In-Service Inspection (ISI) surveillance.

[3] Schedule the work with the Facility Operations Director (FOD) organization.

[4] Ensure that tool, equipment, and material numbers in the work area match those specified.

3.2 Performance Documents

- Operator's manual for pH meter/electrode being used shall be available for reference.
- PMT2-DOP-CF-006-FM1, *CF Storage Tank Log Sheet*
- PMT2-DOP-CF-006-FM2, *Cement Run Sheet*

3.3 Special Tools, Equipment, Parts, and Supplies

- pH meter and electrode
- electrode filling solution (as needed)
- 2 beakers, one labeled *pH 7* and one labeled *pH 10*
- pH 7 buffer solution (traceable to National Institute of Standards and Technology [NIST])
- pH 10 buffer solution (traceable to NIST)
- silicon defoamer (General Electric #9120 or equivalent)
- ~9 molar NaOH (piped to glovebox from facility makeup)
- ≤2-L container of concentrated nitric acid
- Tygon® (or equivalent) tubing, 3/8-inch inner diameter, thick wall
- dip cup on long handle for obtaining pH sample from drum
- cloth for cleaning electrode
- Holder for pH beaker to prevent tip-over

3.4 Field Preparation

Not Applicable

3.5 Approvals and Notifications

Not Applicable

4.0 ACCEPTANCE CRITERIA

[1] pH buffer solutions must not be expired.

[2] Calibration of pH meter must be valid.

[3] Final pH of waste solution in glass column and drum must be 9.5 – 11.5.

5.0 PERFORMANCE

5.1 Calibrating to pH 7 and pH 10 Buffer Solutions

NOTE 1 Various pH meters and electrodes may be used in this procedure. Consult the operator's manual provided by the equipment manufacturer for specific instructions on calibration and use.

NOTE 2 The Waste Compliance and Tracking System (WCATS) is an online system used to document cement drum data. It may be used simultaneously with processing or updated after processing is completed. If the WCATS is not available data can be recorded on Attachment B, *Cement Run Sheet*. Information for WCATS can be transcribed from the Run Sheet at a later time.

WARNING

Hazard: Ergonomics: The transfer of the pH bottles between the dropbox and glovebox can present ergonomic issues due to the weight of the bottles and awkward hand and arm positions.

Controls:
- **When performing this task, personnel shall use caution.**
- **Personnel may use smaller volume bottles of buffer to reduce the weight.**
- **Obtain assistance as needed.**

NOTE The buffer containers are usually stored in the CF dropbox.

[1] Retrieve the buffer containers.

[a] Verify the pH buffer solutions have not expired.

[b] Record the serial number and expiration date for the pH 7 and pH 10 buffer solutions on the Cement Run Sheet or WCATS.

5.1 Calibrating to pH 7 and pH 10 Buffer Solutions (continued)

WARNING

Hazard: Broken glass and Radiological contamination: The pH electrode may have a glass bulb that can be broken and pose a cutting hazard. Breakage can also cut gloves and hands, which can result in contamination.

Controls:
- **Before using the pH electrode, check that the bulb is not broken.**
- **Carefully handle the electrode to avoid breaking the glass bulb.**
- **When not using the electrode, properly store it in its holder to keep it from falling over.**

[2] Remove the pH electrode from its storage container.

[3] Turn the pH unit on,
AND perform any necessary keypad or button operations to ready pH unit to perform a 2-point calibration with pH buffers 7 and 10.

CAUTION

To prevent cross-contaminate, use a separate labeled beaker exclusively for each buffer solution.

NOTE For the electrode to measure pH of the buffer, the buffer must cover the end of the electrode body where the glass bulb is located.

[4] Place the pH electrode in the beaker of pH 7 buffer solution.

[5] Observe the pH value on the display,
AND allow the pH reading to stabilize.

[6] If the pH unit requires a keypad or button operation (pressing OK or ENTER) to accept the pH reading, do so. The reading should lock in the range of pH 6.9 - 7.1.

5.1 Calibrating to pH 7 and pH 10 Buffer Solutions (continued)

[7] Use the following guidance to proceed:

[a] IF the pH reading stabilizes between 6.9 and 7.1,
THEN go to Step **5.1[8]**.

[b] IF the pH reading does NOT stabilize between 6.9 and 7.1, or takes longer than 10 minutes to stabilize,
THEN perform one or more of the following actions before restarting pH calibration at Step **5.1[4]**:

- Replace the electrode and/or meter.
- Gently wipe the glass bulb with a cloth.
- Replace the electrode filling solution.

[8] Record the stabilized pH reading under pH 7.

[9] Remove the electrode from the pH 7 buffer.

[10] Repeat Steps **5.1[4]** – **5.1[9]** for the electrode with pH 10 buffer with the exception of using 9.9 - 10.1 as the acceptable pH range.

[11] Place the electrode in the storage beaker filled with pH 7 storage solution until needed.

5.2 Preparing to Transfer EV Bottoms to the Glass Column

NOTE 1 The cementation Feed Tank (FT) system valves are air-actuated, remotely operated valves (ROV) that are operated via a control panel. A diagram of the tank valve layout on the control panel is used to assist in valve identification.

NOTE 2 The Target Volume is the maximum volume of waste + NaOH + water that is needed prior to cement addition to allow sufficient drum space for the cement needed. The Target Volume is pre-established by your supervisor.

[1] Record the date, drum number, tare weight of the drum assembly, target volume, carbon composite filter ID#, and which scale that the drum is on.

CAUTION

Do not sparge more than one FT at a time to avoid cross contamination of the contents of the FTs.

[2] Sparge the solution in the FT for $\geq$ 2 minutes by performing the following steps:

[a] Apply a vacuum to the FT by opening the vacuum ROV and closing the vent ROV on the FT trap.

[b] Keep the common vac/vent valve on the FT open.

[c] Open the manual vent valve on the glass column in the glovebox.

5.2 Preparing to Transfer EV Bottoms to the Glass Column (continued)

CAUTION

A manual valve (NAF-GB454-V1) to control sparging to the FT system is located outside and under the glovebox at the glass column workstation. If this valve is open when the FT drain valve is opened in the next step, an excessive amount of sparge air pulled into the FT can cause the solution in the FT to overflow into the trap. Ensure valve NAF-GB454-V1 is closed before opening the FT drain valve in the next step.

[d] Open the drain ROV on the FT to be sparged.

[e] Open and adjust the manual valve (NAF-GB454-V1) on the FT transfer line to maintain sparging without overflow to the FT trap.

NOTE Sparging can be detected by feeling the FT or by observing sparging through the lower FT sight glass.

[3] Discontinue sparging after no less than 2 minutes has passed by performing the following steps:

[a] Close the manual valve (NAF-GB454-V1) at the CF glovebox on the FT line.

NOTE The FT drain ROV may be left open if EV bottoms is to be removed from this FT immediately after sparging.

[b] Close the drain ROV on the FT that was being sparged.

[c] Close the vacuum ROV,
AND open the vent ROV on the trap. This also vents the FT.

[4] IF solution has overflowed into the FT system trap during the line clearing operation,
THEN drain the trap,
AND transfer the solution per supervisor's instructions.

5.3 Adjusting the pH of a Representative Sample

[1] Record the FT ID of the EV bottoms to be used.

[2] Transfer ~5L of EV bottoms to the glass column by performing the following steps:

[a] Vent the FT storage tank by closing the vacuum ROV and opening the vent ROV on the trap.

[b] Close the vent valve,
AND open the vacuum valve on the glass column.

[c] Open the drain ROV on the FT.

NOTE In the next step, control the transfer rate of the solution into the glass column by throttling the manual valve (NAF-GB454-V1).

[d] Open the manual valve (NAF-GB454-V1) at the CF glovebox to begin filling.

[e] Record the exact volume of EV Bottoms transferred to the glass column.

[3] Start gentle sparging on the solution in the column by vacuuming air through the column discharge valve as follows:

[a] Close the column vent valve.

[b] Open the column vacuum valve about halfway.

[c] Open the column discharge valve about halfway.

[d] Adjust these discharge and vacuum valves to produce sparging without overflow into the column's vacuum trap.

NOTE Watch for changes in the appearance of the mixture during the next step.
The onset of precipitation and color change are indications of pH shift.

[4] To add NaOH in the following step, open the NaOH valve (NAOH-FT490-V1) located on the outside of the glovebox.

[5] Using the column NaOH valve, add 1 to 2 liters of NaOH to the sparging solution.

[6] IF excessive foaming is encountered,
THEN add defoamer (~20 ml at a time) as necessary by vacuuming it in through the discharge line.

[7] Sparge the contents for at least 1 minute.

[8] IF overflow has occurred,
THEN drain the trap,
AND transfer the solution back to the pH adjustment column.

5.3 Adjusting the pH of a Representative Sample (continued)

[9] Obtain a representative sample for pH check as follows:

[a] Stop sparging by closing the glass column's discharge and vacuum valves.

[b] Open the column vent valve.

NOTE In the following step, the glass column's discharge line and the sample beaker are flushed with column solution to remove remnants of previous batches.

[c] Open the column discharge valve,
AND fill the beaker.

[d] Transfer the solution back into the column by closing the vent valve, opening the vacuum valve, and drawing the solution into the column through the discharge line.

[e] Open the column discharge valve,
AND fill the beaker with enough solution to cover the glass bulb at the end of the electrode.

WARNING

Hazard: Radiological contamination & Sharps: The pH electrode has a glass bulb on its end. If the electrode is struck or falls during use, the bulb may get broken and cut personnel and/or a glove resulting in injury and/or external contamination.

Controls:
- **Handle the electrode carefully to avoid breaking the glass bulb on the end.**
- **When handling an electrode with a broken bulb, use caution and appropriate protective gloves.**
- **Replace electrodes with broken bulbs.**

[10] Determine and note the pH of the solution with respect to the desired final target range using the calibrated pH electrode.

[11] Transfer the EV bottoms solution back into the column according to Step **5.3[9][d]** in this Section.

[12] IF the pH is below the target pH range of pH 9.5 – 11.5,
THEN repeat Steps **5.3[3]** – **5.3[11]** in this Section with the exception of adding NaOH in smaller increments until the pH of the column contents has been adjusted to the target range.

5.3 Adjusting the pH of a Representative Sample (continued)

NOTE Before adding any EV bottoms in the following step, note the volume in the column so you will be able to determine how much additional volume of EV is added.

[13] If the pH is above the target range, perform the following steps:

- **[a]** Add a small amount of EV bottoms from the same FT to reduce the pH using the valve manipulations described in Steps **5.3[2][a]** – **5.3[2][d]** of this Section.
- **[b]** Record the new total volume.
- **[c]** Continue checking the pH, adding EV bottoms solution, and recording the total volume until the pH is in the target range.
- **[d]** IF the pH becomes too low again, THEN repeat Step **5.3[12]**.

[14] When the pH is in the target range, record the final pH.

[15] Put the electrode back into the pH 7 soaking beaker.

[16] Transfer the sample solution back into the column according to Step **5.3[9][d]** of this Section.

[17] Close the column's discharge and vacuum valves, AND open its vent valve and allow the solution to settle.

[18] IF excessive foaming obscures the volume reading, THEN add defoamer as needed by vacuuming it through the discharge line as described in Step **5.3[9][d]** of this Section.

[19] Record the final total volume of the pH-adjusted solution in the column.

[20] From this volume, subtract the volume of EV added to calculate the NaOH volume.

- **[a]** Record the NaOH and EV volumes.
- **[b]** Calculate and record the NaOH/EV ratio.

5.4 Transferring EV Bottoms to the Drum

NOTE The first solution discharged will be the solution from Section 5.3 of ~5L EV with NaOH added to determine the NaOH/EV ratio.

[1] Connect a piece of Tygon® tubing to the column discharge line that is long enough to reach the drum,
AND place the discharge end of the Tygon® tubing inside the drum.

[2] To discharge the content of the column to the drum, perform the following steps:

[a] Close the column vent valve.

WARNING

Hazard: Radiological contamination: Compressed air is used to transfer solutions from the glass pH-adjustment column to the 55-gal drum. Excessive air pressure to the column could rupture it, which could damage the gloves or windows sufficiently to cause contamination release or injure personnel. If the pressure goes too high, the negativity in the glovebox could also be reduced sufficiently to result in the release of contamination.

Controls:

- **Pressure in the air line is controlled by a regulator. When using compressed air, ensure that the air pressure is regulated to no more than 6 psi. If higher pressure is required to transfer the EV bottoms to the drum, ask your supervisor for instructions.**
- **The pH adjustment column is fitted with a pressure relief valve that is design to vent the column at 10 psi or greater.**
- **A photohelic gauge monitors the air pressure within the glovebox, and, if sufficient loss of negativity is detected, automatically closes the compressed air line.**

[b] Open the manual compressed air valve (PCA-GB454-V1) under the glovebox.

[c] Open the column discharge valve.

[d] Open the compressed air valve on the column to begin discharge of the solution through the Tygon® tubing to the drum.

[e] AFTER discharge is complete,
THEN turn off the column compressed air valve,
AND close the column discharge valve.

[f] Close the compressed air valve (PCA-GB454-V1) under the glovebox.

[g] Open the column vent valve.

5.4 Transferring EV Bottoms to the Drum (continued)

[3] WCATS calculates and displays the volume of EV bottoms needed for the rest of the drum using the following equation:

Total EV vol. = Target Vol. / (1 + (NaOH/EV vol. ratio))

* **[4]** The criticality limit for a drum is 200 g SNM.

* **[a]** Following TA55-DOP-016, *TA55 Material Transfer Procedure*, determine the quantity of SNM that is currently present in the destination.

* **[b]** Before physically moving fissile material, check that the transfer will not cause the criticality safety limits to be exceeded in the destination drum. Use the grams Pu listed on the CF Storage Tank Log Sheet (STLS) for each FT for guidance.

[5] From the calculated Total EV volume, subtract the volume of EV used in the NaOH/EV ratio determination.

[a] Vacuum transfer into the glass column the remaining EV needed from the same FT to achieve the Total EV volume needed.

NOTE It may be necessary to transfer this volume of EV bottoms by filling and discharging the column more than once.

[6] Discharge the column contents to the drum following Step **5.4[2]** in this Section.

[7] If the FT empties, record that the tank is empty.

[8] If the FT is not emptied and solution from another FT is required to complete the drum (to reach the total EV volume), clear the discharge line by vacuuming the solution left in the discharge line back into its FT using the following steps:

[a] Ensure that the vent/vacuum ROV is open on this FT.

[b] Close the vent ROV,
<u>AND</u> open the vacuum ROV on the FT trap.

[c] Open the glass column vent valve to vent the glass column in the glovebox.

[d] Check that the drain ROV is open on the receiving FT.

[e] To start the transfer, crack open the manual valve (NAF-GB454-V1) on the line to the FT system at the CF glovebox.

5.4 Transferring EV Bottoms to the Drum (continued)

CAUTION

It is important to close the manual valve (NAF-GB454-V1) as soon as you detect air being pulled into the FT from the discharge line to prevent an excessive amount of air being pulled into the FT and causing an overflow to the trap. You can detect air sparging by feeling the lower part of the FT or by observing sparging through the lower FT sight glass. Have a separate worker feel the FT for sparging so that the manual valve can be closed quickly.

[9] When the line is empty, as shown by air sparging inside the FT, perform the following steps:

- **[a]** Close the manual valve (NAF-GB454-V1) at the CF glovebox.
- **[b]** Close the drain ROV on the FT from which this solution is drawn.
- **[c]** Close the vacuum ROV and open the vent ROV on the FT trap.

[10] To use another FT to reach the total EV Bottoms solution needed in the drum, repeat Sections **5.3** and **5.4** for the next FT.

[11] For each FT used,

- **[a]** Record on Attachment A, *CF Storage Tank Log Sheet* the actual volume out, the date removed, and whether the tank was emptied.
- **[b]** Calculate the volume remaining in the FT, <u>AND</u> enter and initial it on the STLS.

[12] Create the drum on LANMAS.

5.5 Final pH Adjustment in the Drum

WARNING

Hazard: Operating equipment: A high-speed electric mixer is used to adjust the pH of the EV bottoms waste in the drum. Personnel may be injured if contact is made with the spinning mixer.

Controls:

- **Do not have your hands in the rear glovebox gloves when lowering the mixer.**
- **Operate the mixers only after lowering the propellers all the way into the drum.**
- **The top prop on the mixer shaft has a guard ring to reduce the potential for contact with the rotating props.**
- **An emergency stop button is located on the process control console. When activated, the mixer stops and is raised out of the drum.**
- **Two people are always present to observe the process and check on each other.**

[1] Fully lower the mixer into the drum.

CAUTION

Adequately secure the tubing either manually and/or using fittings to prevent the Tygon® tubing from coming off from the discharge valve or out of the drum during a transfer.

[2] Attach a Tygon® tube to the open-ended NaOH line and place the other end in the drum.

WARNING

Hazard: Mechanical hazard: The tubing can become caught in the rotating propeller and be forcibly pulled off the NaOH line.

Controls:

- **Do not allow the NaOH tubing to hang far enough inside the drum to become entangled in the spinning props.**
- **A second person holding the discharge end of the tubing prevents inadvertent entanglement.**

[3] Turn on the mixer to an rpm sufficient to stir the solution.

5.5 Final pH Adjustment in the Drum (continued)

[4] Add NaOH to the drum slowly by manually controlling the NaOH valve while monitoring the pH according to Steps **5.5[5] – 5.5[6]**.

WARNING

Hazard: Radiological contamination & Sharps: The electrode has a glass bulb on its end. If the electrode is struck or falls during use, the bulb may get broken and cut personnel and/or a glove resulting in injury and/or external contamination.

Controls:

- **Handle the electrode carefully to avoid breaking the glass bulb on the end of the electrode.**
- **When handling an electrode with a broken bulb, use caution and protective gloves.**

[5] The pH is monitored by taking the pH of grab samples from the drum. For this task, perform the following steps:

[a] Stop the mixer rotation.

[b] Retrieve a liquid sample from the drum using the long-handled dip cup.

[c] Place the pH electrode in the dip cup,
AND obtain the pH.

[d] Replace the electrode in its soaking beaker.

[e] Pour the liquid from the dip cup back into the drum,
AND set the dip cup aside in a safe place.

[6] As additional pH adjustment is required, restart the mixer, and then resume NaOH addition. Take the pH to the target range of 9.5 – 11.5.

5.5 Final pH Adjustment in the Drum (continued)

WARNING

Hazard: Hazardous chemicals: Concentrated nitric acid may be introduced into the glovebox through a reagent transfer device (RTD). Contact with nitric acid will cause chemical burns.

Controls: Follow the controls contained in TA55-DOP-055, *Reagent Transfer Device.*

NOTE If nitric acid is needed for the following step, when possible use clean or recycled nitric acid from other processes in the glovebox line.

[7] If you overshoot the target pH range, add concentrated nitric acid to adjust the pH by pouring it directly into the drum from the acid container. Use the minimum amount of acid necessary to reach the target range.

[8] Record the final pH and the amount of any acid added.

[9] After all pH adjustment has concluded for the drum, store the electrode in its storage beaker in a safe place.

[10] Observe the solution level in the drum using the volume marks on the inside of the drum liner. Each inch of liner height is equal to 6 liters.

[a] IF the volume is below the target volume,
THEN add sufficient industrial water directly to the drum to reach the target volume.

[b] IF the solution level is more than 6 liters above the target volume,
THEN notify your supervisor before proceeding. It may be necessary to remove pH-adjusted EV bottoms to obtain the desired volume or adjust the amount of cement that will be added.

[11] Proceed to PMT2-DOP-CF-007, *Cement Addition Operations for Cement Fixation* for adding cement to the drum.

6.0 POST-PERFORMANCE ACTIVITIES

6.1 Testing

Not applicable

6.2 Restoration

Not applicable

6.3 Results

[1] Record information for the item and the drum in the CF logbook, WCATS, STLS, and Run Sheet as needed.

6.4 Independent Verification

Not applicable

6.5 Records Processing

[1] See Section 11.0 Records

7.0 EMERGENCY ACTIONS

[1] If a site emergency develops, follow TA55-AP-018, *TA-55 Emergency Procedures*.

[2] No actions will be taken in response to an emergency beyond those prescribed in TA55-PLAN-007, *TA-55 Facility Emergency Plan*. They involve evacuating the area and calling the OC (55-911), then Emergency 911.

[3] In case of physical injury, call the OC at 55-911 or 7-3330 and request the Emergency Response Team.

8.0 DEFINITIONS AND ACRONYMS

Term	Definition
*	When located in far left hand margin identifies steps that are criticality safety significance.
ALARA	as low as reasonably achievable
Be	Beryllium
CCP	Central Characterization Project
CF	cement fixation
CFR	code of federal regulations
CSLA	criticality safety limit approval
DOE	Department of Energy
DOP	detailed operating procedure
EV	evaporator
FLM	first line manager

8.0 Definitions and Acronyms, (continued)

Term	Definition
FOD	facility operations director
FT	feed tank
HAZWOPER	hazardous waste operations
HSWA	Hazardous and Solid Waste Amendments
ISI	In-Service Inspection
LANMAS	Los Alamos Nuclear Material Accountability System
MSDS	material safety data sheet
NaOH	sodium hydroxide
NIST	National Institute of Standards and Technology
NMED	New Mexico Environmental Department
NMHWA	New Mexico Hazardous Waste Act
OC	operations center
PAFD	Process Accountability Flow Diagram
PPE	personal protective equipment
psi	pounds per square inch
RCRA	Resource Conservation and Recovery Act
RCT	radiological control technician
ROV	remotely operated valve
RTD	reagent transfer device
RWP	radiological work permit
SNM	special nuclear material
STLS	storage tank log sheet
TID	tamper-indicating device
TRU	transuranic
TSD	treatment, storage and disposal
TSR	technical safety requirement
WAC	Waste Acceptance Criteria
WCATS	waste management system
WIPP	Waste Isolation Pilot Plant

9.0 RESPONSIBILITIES

Not Applicable

10.0 REFERENCES

Document Number	Title
	LANL Nuclear Material Control and Accountability Procedural Handbook
	CF Process Accountability Flow Diagram (PAFD)
10 CFR 830	*Code of Federal Regulations - Nuclear Safety Management Assurance*
20 NMAC 4	*New Mexico Hazardous Waste Act (NMHWA)*
40 CFR, Parts 260 - 273	*Code of Federal Regulations - Solid Waste*
49 CFR 173.465	*Code of Federal Regulations - Transportation---Type A Packaging Tests*
CCP-QP-016	*CCP Control of Measuring, Testing, and Data Collection Equipment*
DOE/WIPP-02-3122	*Transuranic Waste Acceptance Criteria for the Waste Isolation Pilot Plant*
NCS-CSLA-10-061	*FT Tanks at Location CF*
NCS-CSLA-10-062	*Cementation Glovebox GB454*
P409	*Waste Management*
PMT2-DOP-CF-006-FM1	*CF Storage Tank Log Sheet*
PMT2-DOP-CF-006-FM2	*Cement Run Sheet*
PMT2-DOP-CF-007	*Cement Addition Operations for Cement Fixation*
PMT2-DOP-CF-009	*Inspection of Treatment, Storage, and Disposal Units for Cement Fixation and Tank Storage*
TA55-AP-018	*TA-55 Emergency Procedures*
TA55-DOP-001	*Pre-Job Briefing and Post-Job Review*
TA55-DOP-016	*TA55 Material Transfer Procedure*
TA55-DOP-055	*Reagent Transfer Device*
TA55-PLAN-007	*TA-55 Facility Emergency Plan*
TA55-PLAN-046	*Quality Management Plan (QMP)*
TA55-RD-539	*TA-55 Waste Management Requirements*
TA55-RD-555	*TA-55 Radiation Protection Requirements*
TA55-RD-585	*Nuclear Materials Control and Accountability Requirements*

11.0 RECORDS

Record Identification	Record Type Determination	Protection/Storage Methods	Processing Instructions
CF Logbook	Written process data record	Records shall be maintained at the CF process location.	When the records are ready for final disposition, the record is transferred to Records Management in accordance with procedure.
Attachment A, *CF Storage Tank Log Sheet*			
Attachment B, *Cement Run Sheet*			
Attachment C, *Performance Checklist*	Training record	Filed with training specialist	

12.0 APPENDICES AND ATTACHMENTS

Attachment	Title
A	CF Storage Tank Log Sheet
B	Cement Run Sheet
C	Performance Checklist

Attachment A, CF Storage Tank Log Sheet

SITE ID: 481

LOCATION: 401

CF Storage Tank Log Sheet

TANK #_____

Effective Date: _____

EPA WASTE NUMBERS: D002, D006, D007, D008, D009

HANDLING CODE: S02

ITEM IN					*BLENDED ITEM*							
Date In	Item ID	MT	Volume	Tech	Item ID	Pu SNM & UNC*	Am SNM & UNC	Initial Volume	Actual Volume to Drum	Remaining Volume	Date Out	Tech

*UNC = uncertainty

RCRA Part A Unit Capacity: 460 Gallons

CF Storage Tank Log Sheet-FM1

PMT2-DOP-CF-006-FM1-R0

Attachment B, Cement Run Sheet

CEMENT RUN SHEET

Date_____ Workers_____ Drum #_____

Tare_____ Filter_____ Scale_____

TK to FT Transfer

TK___ to FTx_____ Vol_____ TK___ to FTy_____ Vol_____

Other waste ID#_____ Gross_____ Tare_____ Net_____

pH probe #_____

7 Lot # _____ 10 Lot # _____

7 Exp date _____ 10 Exp date_____

Titration 1

_____L EV + total volume with NaOH _____ pH_____

Vol of NaOH_____ NaOH/EV ratio _____

Remainder FTx to drum_____ Total FTx to drum_____

Pu_____ Am_____

Titration 2

_____L EV + total volume with NaOH _____ pH_____

Vol of NaOH_____ NaOH/EV ratio _____

Remainder FTy to drum_____ Total FTy to drum_____

Pu_____ Am_____

Drum pH adjust Final pH in drum_____

Cement

Starting vol_____ Starting wt_____

Cement wanted: actual vol (L) x ____ kg/L x 2.2 lb/kg = _____lbs

Expected final weight_____

Timer: cement wanted lbs/___ lbs/min= _____ min

Additional time needed_____ Final weight_____

PMT2-DOP-CF-006-FM2-R0

Sample

Attachment C, Performance Checklist

Page 1 of 2

Course:	**Session:**

Procedure No.: PMT2-DOP-CF-006,R1 Title: pH Adjustment of Evaporator Bottoms for Cement Fixation

Task Hazard Level ☐ Minimal ☐ Low ☒ Medium ☐ High ☐ Mission-critical

Worker's Name: _____ Z number _____

☐ Worker has completed the following qualification prerequisites

_____
(Verifier's name and Z number)

☐ _____ ☐ _____

☐ _____ ☐ _____

☐ _____ ☐ _____

Qualification Requirements

Task #	Emergency Actions	Instruction	Evaluation
1	Discuss what to do in case of an emergency.	☐	☐
	Comments		
Task #	**Hazards and Controls**	**Instruction**	**Evaluation**
1	Describe the hazard associated with nuclear criticality and how to minimize it.	☐	☐
2	Describe the hazard associated with ionizing radiation and how to minimize it.	☐	☐
3	Describe the hazard associated with alpha contamination and how to minimize it.	☐	☐
4	Describe the hazard associated with air pressure and how to minimize it.	☐	☐
5	Describe the hazard associated with operating equipment and how to minimize it.	☐	☐
6	Describe the hazard associated with dangerous chemicals and how to minimize it.	☐	☐
7	Describe the hazard associated with working on elevated platforms and how to minimize it.	☐	☐
	Comments		

Attachment C, Performance Checklist

Page 2 of 2

Task #	Procedural Steps	Instruction	Evaluation
1	Discuss logging and inspecting the pH probe.	☐	☐
2	Discuss and/or demonstrate how to calibrate the pH probe to the pH 7 and pH 10 buffer solutions.	☐	☐
3	Discuss the difference between the first batch from a tank and any other batch from a tank.	☐	☐
4	Discuss the transfer of EV Bottoms solution to the glass column and drum.	☐	☐
5	Discuss adjusting and documenting the pH of a representative sample.	☐	☐
6	Discuss how to clear the lines and document the volumes on the STLS.	☐	☐
7	Discuss how to adjust the final pH in the drum.	☐	☐
	Comments		

Signature Approvals

Worker's Name (Last, First, Middle Init.)	**Signature**	**Z #**	**Group**	**Date**

(Your signature indicates that you are confident to safely and independently perform work relative to this procedure.)

Instructor's Name (Last, First, Middle Init.)	**Signature**	**Z #**	**Group**	**Date**

(Your signature indicates that you are confident that the worker indicated above is adequately prepared for a performance evaluation.)

Evaluator's Name (Last, First, Middle Init.)	**Signature**	**Z #**	**Group**	**Date**

(Your signature indicates that you are confident that the worker indicated above has been adequately trained to safely and independently perform work relative to this procedure.)

PMT2-DOP-CF-007, R3 Cement Addition Operations for Cement Fixation

LA-UR-14-24625

Extended Until 6/24/15 per Memo MET-DO:13-08. Extension request was approved by Jeff Yarbrough on 06/24/13.

PMT-2

Detailed Operating Procedure

Approval Cover Sheet

Document number: PMT2-DOP-CF-007,R3

Effective date: 06/08/12

Next review date: 06/08/14

Supersedes:

Title: Cement Addition Operations for Cement Fixation

Status:	**Hazard:**	**For Document Control Use Only:**
☐ New	☐ Low-hazard	
☒ Major revision	☒ Moderate-hazard	
☐ Minor revision	☐ High-hazard/complex	
☐ Review, no change	**Use Type:**	
	☒ Reference ☒ Use every Time (Attachments A, only)	
	☐ WR (Use every Time)	

	Organization	Date	Signature
Approved for Use By:			
SME: Thomas Ricketts	NCO-2	5/22/12	SIGNATURE ON FILE
SME: Georgette Ayers	NCO-2	5/22/12	SIGNATURE ON FILE
Authorized for Use By:			
SME Responsible Line Manager: Richard Mason	NCO-2	5/22/12	SIGNATURE ON FILE
Authorized for Use By:			
FOD/Operations Manager: Chuck Tesch	TA55-OPS	5/22/12	SIGNATURE ON FILE

Approved by:

	Organization	Date	Signature
Approved for Use By:			
Product Engineer	MET-1	5/22/12	SIGNATURE ON FILE
Authorized for Use By:			
Group Leader	MET-1	5/22/12	SIGNATURE ON FILE

Approved by:

Design Agency Liaison: ***Date***	***Process Owner:*** ***Date***
Quality Assurance: ***Date***	***SME:*** ***Date***

☒ Unclassified ☐ Restricted Data	**Derivative Classifier:**
☐ Confidential ☐ Formerly Restricted Data	**Name: SIGNATURE ON FILE**
☐ Secret ☐ National Security Information	**Title: MET-1 FLM Date: 5/23/12**
☐ Unclassified Controlled Nuclear Information	
☐ Official Use Only	**Derived from: CG-SS-4, change 6; 9/2000, DOE OC**

Revision History

Document Number	Effective Date	Action	Description
PMT2-DOP-CF-007,R3	06/08/12	Major revision	• Added A $ next to step 6 in Appendix A. • Documented the SR 4.1.3.5 in Appendix A. • Deleted need for electrician in NOTE 2 of Appendix A. • Added a location to document the time cement is in the silo in Attachment A. • Added PMT2-DOP-CF-009, LANL course 12985, and Plan 256 to Attachment C.
PMT2-DOP-CF-007,R2	Approved never effective	Major Revision	• Revised the TSR controls to comply with the 2011 TSRs
PMT2-DOP-CF-007,R1	9/13/11	Major Revision	• Reformatted to latest DOP template format. • Removed attachments on MASS instructions, PAFD and CSLA. • Replaced MASS with LANMAS and WMS with WCATS. • Added cement silo fill operation
PMT2-DOP-CF-007,R0	12/1/10		Periodic Review No Revision
PMT2-DOP-CF-007,R0	12/18/2008	New Procedure	• Reformatted to IMP 300. • Combined NMT2-WI-009-CF-003 and NMT2-WI-009-CF-915. • Incorporated FOD and RP-1 safety recommendations. • Supersedes NMT2-WI-009-CF-903,R1, NMT2-IWD-WI-009-CF-903,R2, NMT2-WI-009-CF-915,R3. NMT2-WI-009-CF-915,R2.
NMT2-WI-009-CF-915,R3	03/19/07	Major Revision	• Removed steps, hazards and controls associated with internal lead shielding. • Added information about use of temporary shielding.
NMT2-WI-009-CF-903,R1	10/13/06		Periodic Review No Revision
NMT2-WI-009-CF-903,R1	07/14/06	Second Extension	

Revision History (continued)

Document Number	Effective Date	Action	Description
NMT2-WI-009-CF-903,R1	04/13/06	Extension	
NMT2-WI-009-CF-915, R2	01/24/06	Major Revision	• Add drum weight restriction from results of drop tests to comply with U.S. DOT Type A container requirements. • Revised and reformatted to conform to new WI template.
NMT2-WI-009-CF-915, R1	05/20/04	Major Revision	Reformatting, title change, and combining NMT2-WI-009-CF-910 with NMT2-WI-009-CF-915.
NMT2-WI-009-CF-903,R1	04/13/04	Major revision	• Revised and reformatted to conform to the new WI template. • Extensive revisions to the procedural steps. • Revised the hazards table to reflect changes to the HCP.
NMT2-WI-009-CF-915, R0	02/20/02	New	• Transferred from NMT-7 • Supersedes NMT7-WI9-SOP-TA55-DP-04.
NMT2-WI-009-CF-903,R0		New	• Transferred from NMT-7. • Supersedes NMT7-WI4-SOP-TA55-DP-04.

Table of Contents

1.0 INTRODUCTION 5

1.1 Purpose 5
1.2 Scope and Applicability 5
1.3 Applicability 5
1.4 Technical Safety Requirements 6

2.0 PRECAUTIONS AND LIMITATIONS 6

2.1 General 6
2.2 Additional Requirements and Conditions (WR Use) 10

3.0 PREREQUISITE ACTION 11

3.1 Planning and Coordination 11
3.2 Performance Documents 12
3.3 Special Tools, Equipment, Parts, and Supplies 12
3.4 Field Preparation 12
3.5 Approvals and Notifications 12

4.0 ACCEPTANCE CRITERIA 12

5.0 PERFORMANCE 13

5.1 Checking the Dayhopper Screen 13
5.2 Filling the Dayhopper with Cement 15
5.3 Performing the Cementation 17

6.0 POST-PERFORMANCE ACTIVITIES 24

6.1 Testing 24
6.2 Restoration 24
6.3 Results 24
6.4 Independent Verification 24
6.5 Records Processing 24

7.0 EMERGENCY ACTIONS 24

8.0 DEFINITIONS AND ACRONYMS 25

9.0 RESPONSIBILITIES 26

10.0 REFERENCES 26

11.0 RECORDS 27

12.0 APPENDICES AND ATTACHMENTS 27

Appendix A, Filling the PF-53 Cement Silo 28
Attachment A, Filling the PF-53 Cement Silo Acceptance Sheet 30
Attachment B, Cement Run Sheet 31
Attachment C, Performance Checklist 32

1.0 INTRODUCTION

1.1 Purpose

This Detailed Operating Procedure (DOP) describes how Portland cement powder is transferred and added to the waste drum in order to immobilize Transuranic (TRU) waste for disposal at the Waste Isolation Pilot Plant (WIPP). The cement powder is stored outside PF-4 in a silo. The cement is transferred via screw feeder from the silo into a dayhopper (DH) inside PF-4. The cement is then transferred into the glovebox and drum via the Glovebox Screw Feeder (GSF). This DOP also describes how to add cement powder to the cement silo such that the surface level is not above the ¼ of capacity level of the silo.

1.2 Scope and Applicability

This DOP is performed at TA-55, PF-4, Room 401, PF-53 Cement Silo, locations CF and FL01 by NCO-2 workers assigned to the Cement Fixation (CF) process.

This procedure can be performed in Mode 1 or Mode 2.

1.3 Applicability

This procedure is intended to produce a cemented waste form that complies with the Waste Isolation Pilot Plant (WIPP) Waste Acceptance Criteria (WAC) as defined in *Transuranic Waste Acceptance Criteria for the Waste Isolation Pilot Plant*, DOE/WIPP-02-3122, for contact-handled TRU waste.

The CF process and this procedure are subject to quality assurance program plan specified in TA55-PLAN-046, *Quality Management Plan (QMP)* and 10 CFR 830, *Nuclear Safety Management Assurance.*

This procedure is subject to the Central Characterization Project (CCP) procedure CCP-QP-016, *CCP Control of Measuring, Testing, and Data Collection Equipment*.

This procedure is intended to produce a cemented waste form that meets the Resource Conservation and Recovery Act (RCRA), definition of a non-mixed waste as defined by 40 CFR, Parts 260 through 273, *Solid Waste*, as amended by the Hazardous and Solid waste Amendments (HSWA). Hazardous waste regulation and enforcement in New Mexico is performed by the New Mexico Environmental Department (NMED) under 20 NMAC 4, New Mexico Hazardous Waste Act (NMHWA). This statute is implemented by the regulations contained in Title 20 New Mexico Hazardous Waste Management Regulations, as amended. The NMED is also authorized to regulate the hazardous component of mixed waste in lieu of the federal program.

To prevent damage to the cement drum package due to a drop during transport, cement drums are produced to meet the Type A DOT container testing criteria in 49 CFR 173.465. The gross weight shall not exceed the weight at which a mock-up cement drum has been satisfactorily drop tested. A gross weight of 852 lbs was established as the maximum weight through drop tests at Los Alamos National Laboratory that were conducted according to 49 CFR 173.465, *Transportation---Type A Packaging Tests* as reported in LANL memorandum NMT-14: 05-037, *Request for Removal of TA-55 Compensatory Measures from Type A Transuranic (TRU) Waste Containers PISA*, April 29, 2005.

1.4 Technical Safety Requirements

NOTE The amount of cement in the cement silo shall be limited to less than or equal to ¼ of the silo capacity at all times for conservatism.

LCO: CONFINEMENT INTEGRITY SHALL exist and the amount of cement in the PF-53 cement silo SHALL be ≤ ½ of silo capacity.

SR 4.1.3.5: VERIFY that the PF-53 cement silo level is ≤ ½ of silo capacity.

Frequency: Within 4 hours of adding cement to the PF-53 cement silo

2.0 PRECAUTIONS AND LIMITATIONS

2.1 General

A. Pause/Stop Work

All workers are responsible for pausing or stopping work when they have a reasonable belief that quality, work risks or hazards are not effectively controlled and workers have the right to do so without fear of reprisal. LANL Policy P101-18 provides more information on the differences between pausing or stopping work and the process for resuming work in either case.

If this procedure cannot be completed as written or abnormal conditions are encountered, STOP, place the work in a safe configuration if possible, and notify the Operations Center (OC) and First Line Manager (FLM).

B. Hazards and Controls

Hazards and controls that are associated with this DOP are embedded in the procedural steps. The following table identifies those hazards and controls that are not tied to a specific step:

Hazard	Controls
Nuclear Criticality Accident: An inadvertent self-sustaining or divergent chain reaction that may release large amounts of neutron and gamma radiation causing serious injury or death.	• Process specific controls (administrative requirements and engineered features) are detailed on the applicable Criticality Safety Limit Approvals (CSLA) associated with this operation. See Section 10.0, References, for a listing of the applicable CSLA(s).

B. Hazards and Controls (continued)

Hazard	Controls
Ionizing Radiation and Contamination	• Radiation Protection Requirements are detailed in TA55-RD-555. • Follow radiological postings. • Radiological Control Technicians (RCTs) are notified to perform a radiation survey when transferring radioactive material that could cause a new radiation area or high radiation area to be created. • As Low as Reasonably Achievable (ALARA) principles are to be used (time, distance, and/or shielding) to minimize dose to workers. • Correct personnel protective equipment (PPE) is to be used. • Radiation Work Permits (RWPs) are required when dose rates ≥ 75 mrem/hr at 30 cm or ≥ 700 mrem/hr on contact.
Sharps: Potential sharps/burrs may be encountered in unexpected locations contact with which could result in a skin injury and/or glove puncture and contamination release.	• Workers should use caution. • Workers should visually survey the work area for potential sharps prior to working. • Workers should be aware of changing conditions that could result in the creation of a sharp.
Beryllium (Be) Hazard: • Cement drums containing waste from the Pu-Be program can contain trace amounts of Be. Some drums contain Be in the cemented waste matrix. Respirable Be is a carcinogen and is also known to cause a serious, chronic lung disease called Chronic Beryllium disease. • The presence of Be can also result in elevated dose rates, although this effect is usually only considered a problem when the Be is in solution form.	• Be in EV bottoms solution is not in a respirable form. • The engineered structures (gloveboxes) and PPE used to control radiological hazards in PF-4 (coveralls, safety glasses, gloves and booties) is sufficient for Be hazards. • Additional shielding is used if the RCT determines an elevated dose rate is present.

B. Hazards and Controls (continued)

Hazard	Controls
Hazardous chemicals: • Exposure to hazardous chemicals and waste containing hazardous materials can result if containment (glovebox, gloves, etc.) is breached or if transfer lines leak. • Many of the wastes processed in the CF glovebox contain corrosive (acid) and toxic (heavy metals) materials.	The controls provided by TA55-RD-555, *TA-55 Radiation Protection Requirements,* are effective in preventing exposure to hazardous chemicals. To minimize the hazards from dangerous chemicals: • Eye wash and shower are located within 100 feet of the glovebox. • Experienced and trained personnel make use of Material Safety Data Sheets (MSDS) to acquaint themselves with chemicals they are handling. • Wear PPE (chemical resistant gloves, safety glasses, safety shoes, face shield, apron, etc.) appropriate to the material being handled. • Engineered containment (gloveboxes, pipes). • Frequent inspections of the TSD area keep PMT-2 personnel abreast of changing conditions. • During walk-arounds, watch for evidence of leaks. • Hazardous and toxic materials are stored in appropriate containers with proper labels. • Observe barriers in hazardous waste areas. • Follow guidelines in TA55-RD-539, *TA-55 Waste Management Requirements* and LIR 404-00-03.1, *Hazardous and Mixed Waste Requirements.* • Formal hazardous waste training is mandatory.
Ladder Hazard:	• Personnel climbing ladders are required to have current LANL course 12985 “Ladder Safety” training.
Regulated Waste: This work takes place within the Treatment, Storage, and Disposal (TSD) unit. A TSD unit is a permitted or interim status hazardous waste management unit where hazardous or mixed waste regulated by the Resource Conservation and Recovery Act (RCRA) may be stored or treated before disposal.	• The CF Process operates as a TSD unit and must comply with New Mexico State-regulated requirements for operation and inspection. Requirements include inspections to ensure safe operation. The inspection procedure is found in PMT2-DOP-CF-009, *Inspection of Treatment, Storage, and Disposal Units for Cement Fixation and Tank Storage*. • Manage waste in compliance with regulations. Specific waste controls are available at http://swrc.lanl.gov/pdffiles/iwmWasteControls.pdf. Additional waste management information is available at http://swrc.lanl.gov. • Plan 256: RCRA Hazardous/Mixed Waste Worker Training • During walk-arounds, watch for evidence of leaks. • pH adjustment and/or cementation removes the characteristics of corrosivity and toxicity from the waste being treated.

B. Hazards and Controls (continued)

Hazard	Controls
Ergonomics: Awkward, reaching and static positions are encountered.	• Use caution. • Ask for assistance if necessary. • Take breaks.
Elevated workspace: The operator works on an elevated stand to operate glovebox equipment. The stand is secured to the glovebox with a pin/hole arrangement that allows the platform to be removed for access to the drum during drum-out. There is also an elevated walkway behind the glovebox. • When entering or leaving the elevated work surface, workers may fall or stumble. • If detached from the glovebox, the stand may roll away from the glovebox while workers are on it. • The elevated walkway behind the presents a tripping hazard.	• Before climbing onto the rollable elevated work stand, attach it to the glovebox stand. • Signs are posted to alert personnel to the tripping hazard. • When in elevated areas, personnel should use appropriate caution.

C. Unique Entry Conditions

Not Applicable

D. Sequence of Steps

The steps in the Performance section are to be performed in sequence unless otherwise stated.

E. Criticality Safety Limit Approval (CSLA) Requirements

The CSLA requirements are detailed in documents NCS-CSLA-10-062 below.

NCS-CSLA-10-062 *Cementation Glovebox G454*

Administrative Requirements	
Pu in solution/cemented waste/particulate	≤520 grams Pu total. No more than 200 grams Pu per drum

2.1 General (continued)

F. Required Permits

New Mexico Environmental Division (NMED) Permit to operate as a TSD unit.

G. Training and/or Qualifications

- Operators must be qualified to this procedure or in supervised qualification on this procedure. Operator qualification is documented on Attachment C, *Performance Checklist*.
- Personnel climbing ladders are required to have current LANL course 12985 "Ladder Safety" training.

H. Cautions

Not applicable

I. Material Control and Accountability

This procedure complies with the *LANL Nuclear Material Control and Accountability Procedural Handbook* and TA55-RD-585, *Nuclear Materials Control and Accountability Requirements.* Receipt or shipment of material is accompanied by appropriate Los Alamos Nuclear Material Accountability System (LANMAS) transactions and manifests.

Because the drum is attached to the GB system, to prevent any unauthorized personnel from diverting nuclear material out through a cemented drum, the process operation also requires the following:

- If the cementation GB is unattended, it is locked. Only the CF and EV operations have keyed access to DB-424 in PF-4. The CF GB has a combination lock(s), the combination to which is known only by CF personnel.
- When the CF process is running, two personnel must be present.

2.2 Additional Requirements and Conditions (WR Use)

Not applicable.

3.0 PREREQUISITE ACTION

3.1 Planning and Coordination

[1] Ensure that a pre-job brief has been conducted in accordance with TA55-DOP-001, *Pre-Job Briefing and Post Job Review.*

[2] Obtain permission from the Operations Center [TA55], if applicable, before conducting a Technical Safety Requirement (TSR) Surveillance Requirement (SR) or In-Service Inspection (ISI).

[3] Schedule the work with the Facility Operations Director (FOD) organization.

[4] Ensure that tool, equipment, and material numbers in the work area match those specified (see sub-section 3.3).

[5] Preventive Maintenance.

[a] The following equipment should be checked for proper operability or replaced once per year and the results recorded in the logbook.

- Pressure Relief Valve (PRV) on pH adjustment glass column (replace)
- Panic button (see below in Section 7 for description)

[b] The operability of the high-level detector in the DH is verified each time the DH is filled by successful stopping of cement delivery when the detector is reached.

[6] Cement Procurement.

The cement fixation process SME does the ordering of the cement. Order cement from the appropriate vendor for bulk delivery after the cement level is within the cone of the silo, but before the silo is empty. No more than 4 tons of cement should be ordered after the cement in the silo reaches the silo cone.

Perform Appendix A for filling the PF-53 Cement Silo and record level of cement silo on Attachment A. Attachment A shall be turned into the Operations Center.

3.2 Performance Documents

Not Applicable

3.3 Special Tools, Equipment, Parts, and Supplies

- screen scoop
- bag to contain hopper cleanout material
- polypropylene cloths
- tools for cleanup (ex. spatula and wire brush)
- cement accelerator or additive as needed
- watch or clock
- tape measure
- flashlight

3.4 Field Preparation

- pH of waste must be within 9.5 – 11.5 prior to cement addition.
- All wastes must be in the drum and ready for cementation.
- Emergency stop button must be in the OUT position.
- The area in front of the PF-53 cement silo must be clear to allow for the delivery of cement.

3.5 Approvals and Notifications

Not Applicable

4.0 ACCEPTANCE CRITERIA

NOTE The amount of cement in the cement silo shall be limited to less than or equal to ¼ of the silo capacity at all times for conservatism.

$ **SR 4.1.3.5**: VERIFY that the PF-53 cement silo level is ≤ ½ of silo capacity.

Frequency: Within 4 hours of adding cement to the PF-53 cement silo

Ensure the PF-53 cement silo is not filled to greater than ¼ of the silo capacity (the measurement from the low side of the port to the top of the cement level inside the silo shall be ≥ 177 inches). This acceptance criteria is met in Attachment A, *Filling the PF-53 Cement Silo Acceptance Sheet*.

5.0 PERFORMANCE

5.1 Checking the Dayhopper Screen

NOTE 1 The DH is equipped with a screen over the discharge port to prevent large chunks of hardened cement from entering the GSF (formally called the Accu-Rate® system) and causing damage or becoming plugged.

NOTE 2 The screen does not need to be checked each time the DH is filled. The screen is to be checked periodically and any time cement does not discharge properly.

NOTE 3 The screen is located in the lowest part of the DH over the discharge port. Therefore, it is most easily accessed when the cement level in the DH is low.

WARNING

Hazard: Elevated work surface: The worker uses an elevated platform to access the DH that poses the following hazards:

- **Tripping and falling hazard.**
- **Overhead obstructions with limited head room.**
- **Tools left on the platform grating may fall on those below.**

Controls:

- **Hand rails and a door on the platform provide protection from falling.**
- **Clear workers out from under the platform.**
- **Personnel should use appropriate caution when in these areas.**

[1] Remove bolt-on window on the lid of the DH.

[2] Have the RCT check inside the DH for contamination.

5.1 Checking the Dayhopper Screen (continued)

WARNING 1

Hazard: **Radiological contamination: Opening the DH for inspection can expose workers to radiological contamination.**

Control: **Before workers enter the DH, an RCT must monitor the inside of the hopper for contamination. The RCT may require that the room is red-lit during this inspection.**

WARNING 2

Hazard: **Hazardous chemicals:**

- **Portland cement may contain substances that are hazardous if inhaled.**
- **Airborne cement dust can dry out tissue if contacting skin or inhaled into the lungs.**

Controls:

- **Wear full-face respirator with P-100 cartridges when opening the DH and exposing self to cement dust while on the elevated platform next to the DH.**
- **When the DH is closed, the engineered barrier of the DH and cement delivery system protects the worker against exposure.**

[3] If necessary, move the cement to access the screen.

[4] Use the screen scoop to remove any chunks of cement or foreign material, AND discard them in a bag.

[5] Dispose of the bag in a yellow-top trash can.

[6] Record screen cleaning in the logbook, AND describe what was found.

5.2 Filling the Dayhopper with Cement

CAUTION 1

Operating equipment: It is possible for foreign objects to become lodged in the screw conveyer systems. Immediately turn off the screw feeder if it makes any noises that suggest that something is caught in it and contact the supervisor.

CAUTION 2

In the following step, if the open-status lights for the knife gate valves do no stay lit after opening the valves, the valves did not fully open. Due to electronic interlocks in the cement delivery system, the DH filling operation may not start. Contact your supervisor. Electrical or mechanical trouble-shooting may be necessary.

NOTE The lights stay on when the knife gates are fully open.

[1] To begin filling the DH with cement from the silo, open knife gate valves A (KGA) and B (KGB) by pushing their open buttons on the control panel.

[2] Press the RESET button,
AND verify that the RESET light is then off.

[3] Before starting to fill the hopper, make sure that the following conditions exist:

- DH high-level light #1 is off
- RESET button light is off
- flexible spool is in (SPOOL IN light is on)
- drum is not being filled with cement
- silo is not being filled with cement

NOTE When the START button is pressed, the silo vibrator, rotary air lock valve (RA), and silo screw feeder (SSF) start running.

[4] Press the START button to start filling the hopper.

5.2 Filling the Dayhopper with Cement (continued)

CAUTION

Normal current readings are 2.0 to 4.0 amps for the SSF and 1.0 to 3.0 amps for the RA. If the current registers above or below the normal levels on the SSF or RA gauges, turn off the equipment by pressing the STOP button. Notify your supervisor.

[5] Verify that the SSF and the RA are running by observing a reading on the amperage gauges.

CAUTION

If the high level detector fails to detect the cement, the DH filling operation will not stop, which can lead to a compaction of cement in the SSF and DH. Observe the filling operation to completion. If the high level detector fails to detect the high level, immediately press the STOP button on the control panel.

NOTE The level will be above the window shortly before the high-level detector is reached.

[6] Use the side window on the DH to see the cement level.

[7] When cement contacts the DH #1 high-level detector, the following occur:

- The operation stops.
- The KGA and KGB valves automatically close.
- The DH #1 high-level light illuminates.

5.3 Performing the Cementation

NOTE 1 If an additive such as a set accelerator or retarder is required, your supervisor will determine what it is and when to add it.

NOTE 2 The weight of the drum lid and lid ring will be needed in Step **5.3[12]** for estimating the gross weight of drum after drum-out/closure to make certain that it does not exceed the 852-lb limit for a DOT Type A container.

[1] Obtain the weight of the drum lid and lid ring.

NOTE 1 WCATS is to be used to keep track of the cementation activities including visual volume (liters) and the weight (lbs) of the drum.

NOTE 2 Attachment B, *Cement Run Sheet* may be used to record information for later transcribing into WCATS.

NOTE 3 WCATS will use the following weight to calculate the final amount of cement added in Step **5.3[14]**.

[2] Enter the drum weight (without lid and ring) in WCATS as the initial weight.

[3] Enter the volume of liquid in the drum using the volume markings on the liner,
<u>AND</u> add water as necessary to reach the target volume, which is pre-determined by your supervisor.

NOTE The desired cement weight for this drum is determined by the cement-to-liquid ratio (pre-set in WCATS by your supervisor) and the liquid volume. WCATS calculates the cement add time by dividing the desired weight of cement for this drum by the Glovebox Screw Feeder (GSF) cement discharge rate for the previous drum.

$$\text{Cement}_{(lb)} = \text{Cement-to-liquid ratio}_{(Kg/L)} \times \text{Liquid volume}_{(L)} \times 2.2_{(lb/Kg)}$$

$$\text{GSF Time}_{(min)} = \text{Cement}_{(lb)}/\text{GSF discharge rate}_{(lb/min)}$$

[4] Set the timer on the GSF to the cement add time calculated or indicated on WCATS.

[a] Make sure that the GSF Feed Rate is set at 999 and the Agitation Rate is set at 650.

[5] Place the cement discharge tube inside the drum.

[6] Fully lower the mixer into the drum.

5.3 Performing the Cementation (continued)

WARNING

Hazard: Radiological contamination and Operating equipment: Contact with the rotating mixer can cause injury or pinch glove material if the worker contacts to mixer props.

Controls:
- **The top stirrer propeller has a guard around its perimeter.**
- **Avoid rotating the mixer while hands are in the mixer workstation and avoid having your hands in the glovebox when the mixers are rotating.**
- **Stop rotation of mixer before raising the mixer props to within reaching distance.**
- **Operate the mixers only after lowering the propellers all the way into the drum.**
- **An emergency stop button stops and raises the mixers when pushed in.**

[7] Turn on the mixer,
AND adjust the speed to an rpm adequate to generate thorough mixing without splashing.

CAUTION

Mechanical: The GSF could be damaged if a foreign object enters it.

- **Turn off the GSF if any noises indicate an obstruction and contact the supervisor.**
- **When pushed, the emergency stop button causes the GSF to the drum to stop, and the butterfly valve located between the DH and GSF to close.**

NOTE The cement delivery system will not operate unless the following conditions are satisfied.

[8] On the mobile control rack, ensure the emergency stop button is in the OUT position and the scale switch is in the ON position.

NOTE The following step will allow cement delivery to be started from the GSF control panel.

[9] Ensure the switch on the GSF control panel is OFF and the cement discharge switch located between the two front workstations is ON.

5.3 Performing the Cementation (continued)

WARNING

Hazard: Radiological contamination: The cement powder in the DH and GSF provide a barrier to back contamination. If the DH or GSF becomes empty, it presents a path for contamination upstream.

Controls: Low-level detectors in the DH and GSF ensure proper cement level is maintained. If a low level is detected in either location, cement delivery stops and the BF valve closes.

- **If the DH low-level detector is reached, refill the DH with cement powder from the silo.**
- **If the GSF low-level detector is reached, this indicates a blockage between the GSF and DH. Stop work and call your supervisor.**

NOTE The following step simultaneously starts the DH vibrator, opens the butterfly (BF) valve, and starts the agitation and screw rotation in the GSF.

[10] To start cement delivery to the drum, press the ON switch at the GSF panel, AND immediately press the Reset button on the panel to reset the timer display.

[11] As more cement is added, gradually turn the mixer speed up, but only to the minimum necessary to keep the cement powder mixed in quickly, AND ensure good center-to-edge mixing.

[a] Do not let cement powder pile up on the surface.

CAUTION

The drum will not meet the DOT shipping requirements if the weight of the drum and contents exceed 852 lbs. Stop cement addition if the estimate approaches 852 lbs.

NOTE The scale weight taken during mixing will be high because of the downward force on the scale from mixing.

[12] As cement addition and mixing continues, estimate drum gross weight drum by adding the combined weight of the lid and lid ring obtained in Step **5.3[1]** to the weight indicated on the scale display.

5.3 Performing the Cementation (continued)

WARNING

Hazard: Radiological contamination and Operating equipment: Attempting to scrape off caked-up cement or particulate on the inside of the liner with an extension tool can lead to contact with the rotating mixer and subsequent glove breach and physical injury.

Control: When mixing, never attempt to scrape cement build-up from the inside of the liner. Stop the mixer first, and then use a long-handled scraper to dislodge the cement.

[13] Continue cement addition until the timer reaches 0.0. However, mixing and/or cement addition should be stopped sooner for the following conditions.

[a] IF the discharge rate of the cement begins to exceed the ability of the mixer at 100% rpm to adequately mix in the cement powder,
THEN before center-to-edge mixing is lost, stop adding cement by pressing stop button,
AND continue mixing at 100%.

1. IF the mixture does NOT thin out enough to restart cement addition within 30 seconds,
THEN proceed to Step **5.3[20]** to conclude the drum.

2. IF the mixture thins out within 30 seconds,
THEN restart the cement addition.
AND repeat this step until the mixture does not thin out within 30 seconds or the timer reaches 0.0.

[b] IF the cement reaches the 3-in. mark below liner lip,
THEN stop cement addition.

[c] IF the cement appears to be hardening quickly,
THEN stop cement addition and mixing,
AND raise the mixer immediately.

[d] IF, using the guidance in Step **5.3[12]**, you determine that the gross weight of the drum is approaching the 852-lb limit,
THEN stop cement addition.

5.3 Performing the Cementation (continued)

NOTE If the current needed to power the mixer exceeds a preset level (~12 to 14 amps) the mixer shuts off automatically.

[e] IF the cement becomes so thick that the current needed to power the mixer exceeds a preset level (~12 to 14 amps),
THEN

1. Stop cement addition.

2. Raise the mixer.

3. Do NOT restart mixing.

WARNING

Hazard: Operating equipment: If a worker's hands are in the rear gloves of the glovebox when the mixer is raised, this can pose a risk of personal injury or glove damage.

Control: When raising the mixer, make sure no one has their hands in the rear glovebox gloves.

NOTE WCATS calculates how much cement was added and if it was within the acceptable range of cement needed for the liquid volume to achieve the target cement-to-liquid ratio.

[14] Enter the drum weight in WCATS.

[15] Use the following guidance depending on the cement weight:

[a] IF the cement is within or above the acceptable range (indicated by no warning notice),
THEN proceed to Step **5.3[16]** to restart mixing.

5.3 Performing the Cementation (continued)

NOTE 1 A low cement weight may be due to a blockage causing a decrease in the GSF discharge rate. The WCATS calculates the next drum's cement discharge rate (add time) from this drum's cement weight vs. add time. To compensate for the reduced rate in the next drum, the WCATS will increase the add time to obtain the required cement weight. If a blockage is found and remedied prior to the next drum, this increased add time will not be valid. Consult your supervisor before the next drum in order to make the appropriate changes to the add time.

NOTE 2 WCATS displays the added cement time needed in the additional cement add time field.

[b] IF the cement is below the acceptable range, a warning is displayed on WCATS that additional cement is required,
THEN perform the following steps:

1. Set the timer for the GSF to the additional time indicated,
AND restart mixing and cement addition, following
Steps **5.3[7]** – **5.3[13]**. Allow the GSF timer to time out.

2. WHEN the GSF time times out,
THEN stop and raise the mixer.

3. Enter the new weight in WCATS.

[16] Restart mixing,
AND continue mixing for 4 minutes at maximum speed without splashing.

[17] Record the mix time in WCATS,
AND indicate if accelerator or other additive was added.

[18] Indicate on WCATS that cementation has been completed.

[19] After mixing is complete, raise the props.

5.3 Performing the Cementation (continued)

WARNING

Hazard: Sharps: Potential sharps/burrs may be encountered in unexpected locations contact with which could result in a skin injury and/or glove puncture and contamination release.

Controls:
- **Workers should use caution.**
- **Workers should visually survey the work area for potential sharps prior to working.**
- **Workers should be aware of changing conditions that could result in the creation of a sharp.**

NOTE A small amount of water may be used for rinsing.

[20] Using an appropriate cleaning tool, clean off the mixer props into the drum.

[a] Clean the area of cement dust using the cloths.

[b] Clean the tools used for cleaning.

NOTE Usually the drum is left to harden at least overnight before drum-out.

[21] Do NOT drum-out the drum until the cement has set (hardened) and free liquid has been absorbed. (See PMT2-DOP-CF-002, *Drum-in/Drum-out Operations for Cement Fixation*.)

[22] Perform the necessary LANMAS transactions.

6.0 POST-PERFORMANCE ACTIVITIES

6.1 Testing

Not applicable

6.2 Restoration

Not applicable

6.3 Results

[1] Record information for the item and the drum in the CF logbook and in WCATS.

6.4 Independent Verification

Not applicable

6.5 Records Processing

[1] See Section 11.0 Records

7.0 EMERGENCY ACTIONS

[1] If a site emergency develops, follow TA55-AP-018, *TA-55 Emergency Procedures.*

[2] No actions will be taken in response to an emergency beyond those prescribed in TA55-PLAN-007, *TA-55 Facility Emergency Plan*. They involve evacuating the area and calling the OC (55-911), then Emergency 911.

[3] In case of physical injury, call the OC at 55-911 or 7-3330 and request the Emergency Response Team.

[4] A *panic button* (emergency stop button) on the control rack shuts down the system safely. This device is used whenever a system upset or hazardous condition arises and in the event of an evacuation. When this button is pushed, the mixers stop and raise out of the drum, the butterfly valve closes, and the cement delivery to the glovebox stops.

[5] The proper functioning of the emergency stop button should be verified once per year and the results recorded in the logbook.

[6] If you must stop mixing or delivering cement because of an emergency or having to vacate the area, push the emergency stop button. **If you cannot do this quickly and get out of the area, do not endanger anyone by taking time to push the button.**

8.0 DEFINITIONS AND ACRONYMS

Term	Definition
$	When located in far left hand margin identifies steps that implement Technical Safety Requirements.
*****	When located in far left hand margin identifies steps that are criticality safety significance.
ALARA	As Low As Reasonably Achievable
Be	Beryllium
BF	Butterfly (valve)
CCP	Central Characterization Project
CFR	Code of Federal Regulations
CSLA	Criticality Safety Limit Approval
DH	Dayhopper
DOP	Detailed Operating Procedure
DOT	U.S. Department of Transportation
EV	Evaporator
FLM	First Line Manager
FOD	Facility Operations Director
GSF	Glovebox Screw Feeder
HSWA	Hazardous and Solid Waste Amendments
ISI	In-Service Inspection
KGA	Knife Gate Valve A
KGB	Knife Gate Valve B
LANL	Los Alamos National Laboratory
LANMAS	Los Alamos Nuclear Material Accountability System
MSDS	Material Safety Data Sheet
NMED	New Mexico Environmental Division
NMHWA	New Mexico Hazardous Waste Act
OC	Operations Center
PPE	Personal Protective Equipment
RA	Rotary Air Lock
RCRA	Resource Conservation and Recovery Act
RCT	Radiological Control Technician
RWP	Radiological Work Permit
SSF	Silo Screw Feeder
TRU	Transuranic
TSD	Treatment, Storage And Disposal (unit)
TSR	Technical Safety Requirement

8.0 DEFINITIONS AND ACRONYMS (continued)

Term	Definition
WAC	Waste Acceptance Criteria
WCATS	waste characterization and tracking system
WIPP	Waste Isolation Pilot Plant

9.0 RESPONSIBILITIES

Not Applicable

10.0 REFERENCES

Document Number	Title
10 CFR 830	*Code of Federal Regulations - Nuclear Safety Management Assurance*
20 NMAC 4	*New Mexico Hazardous Waste Act (NMHWA)*
40 CFR, Parts 260 - 273	*Code of Federal Regulations - Solid Waste*
49 CFR 173.465	*Code of Federal Regulations - Transportation---Type A Packaging Tests*
CCP-QP-016	*CCP Control of Measuring, Testing, and Data Collection Equipment*
DOE/WIPP-02-3122	*Transuranic Waste Acceptance Criteria for the Waste Isolation Pilot Plant*
LIR 404-00-03.1	*Hazardous and Mixed Waste Requirements*
NCS-CSLA-10-062	*Cementation Glovebox G454*
NMT-14: 05-037 memorandum	*Request for Removal of TA-55 Compensatory Measures from Type A Transuranic (TRU) Waste Containers PISA*
PMT2-DOP-CF-002	*Drum-in/Drum-out Operations for Cement Fixation*
PMT2-DOP-CF-009	*Inspection of Treatment, Storage, and Disposal Units for Cement Fixation and Tank Storage*
TA55-AP-018	*TA-55 Emergency Procedures*
TA55-AP-138	*Records Processing Procedure for ADPSM Organizations*
TA55-DOP-054	*Vehicle Operations Program*
TA55-DOP-001	*Pre-Job Briefing and Post-Job Review*
TA55-PLAN-007	*TA-55 Facility Emergency Plan*
TA55-PLAN-046	*Quality Management Plan (QMP)*
TA55-RD-539	*TA-55 Waste Management Requirements*
TA55-RD-555	*TA-55 Radiation Protection Requirements*
TA55-RD-585	*Nuclear Materials Control and Accountability Requirements*
TA55-TSR-2011	*TA-55 Technical Safety Requirements (TSRs)*

11.0 RECORDS

Record Identification	Record Type Determination	Protection/Storage Methods	Processing Instructions
CF Logbook	Written process data record	Records shall be maintained at the CF process location.	When the records are ready for final disposition, the record is transferred to Records Management and processed in accordance with TA55-AP-138.
Attachment A, *Filling the PF-53 Cement Silo Acceptance Sheet*	QA record	Maintained in a metal file cabinet when not in use.	Record shall be turned into the Operations Center.
Attachment B, *Cement Run Sheet*	Aid for data input into the WCATS	Kept until data is placed into the WCATS.	Not a record.
Attachment C, *Performance Checklist*	Training record	Filed with training specialist.	Record shall be maintained by the Training Coordinator upon completion of training and qualification. When no longer in use transfer to the DCC for archiving.

12.0 APPENDICES AND ATTACHMENTS

Appendix	Title
A	Filling the PF-53 Cement Silo

Attachment	Title
A	Filling the PF-53 Cement Silo Acceptance Sheet
B	Cement Run Sheet
C	Performance Checklist

Appendix A, Filling the PF-53 Cement Silo

Page 1 of 2

SR 4.1.3.5: VERIFY that the PF-53 cement silo level is ≤ ½ of silo capacity.

Frequency: Within 4 hours of adding cement to the PF-53 cement silo**CAUTION**

The cement silo must not be filled to more than ¼ full in order to comply with the seismic considerations.

NOTE The cement fixation process SME does the ordering of the cement. Order cement from the appropriate vendor for bulk delivery after the cement level is within the cone of the silo, but before the silo is empty. No more than 4 tons of cement should be ordered after the cement in the silo reaches the silo cone.

[1] Escort the driver and cement vehicle to the cement silo in accordance with TA55-DOP-054, *Vehicle Operations Program*.

[2] Unlock the cover from over the pneumatic delivery pipe with the key obtained from the Operations Center.

[3] Have the driver hook up the hose from the cement truck trailer to the pneumatic delivery fill pipe on the silo and pneumatically transfer the cement into the silo.

[4] When the delivery transfer is complete, escort the driver and cement vehicle from the cement silo.

[5] Lock the cover plate over the pipe,
AND return the key to the Operations Center.

$ **[6]** After the cement dust has sufficiently dissipated inside the silo to allow viewing of the cement surface, perform the following steps to confirm that the level is at or below the ¼ capacity of the silo. Document the time on Attachment A.

NOTE 1 Due to the pneumatic transfer, the cement powder will be aerated, thus at a greater height than normal. The silo may be vibrated to assist in de-aerating, settling and leveling the cement at a lower level.

NOTE 2 Vibrating the silo may be done by using the dayhopper fill operation detailed in section **5.2**.

[a] Vibrate the silo for approximately 15 minutes.

[b] Notify security prior to climbing the cement silo.

Appendix A, Filling the PF-53 Cement Silo

Page 2 of 2

WARNING 1

Hazard: **Ladder Hazard**

Control:
- **Always face the ladder and use at least one hand to grasp the ladder when climbing and descending.**
- **Do not carry objects that could cause you to lose balance and fall.**
- **Keep tools in tool belt.**
- **Avoid excessive stretching, leaning or overreaching.**

WARNING 2

Hazard: **The top of the silo is an elevated work surface from which the worker may fall.**

Control:
- **Use caution when on the top of the silo.**
- **Hand rails provide protection from falling.**

[c] Climb the ladders to the top of the silo,
AND remove the cover from the access port.

WARNING 1

Hazard: **Pinching Hazard**

Control:
- **Maintain awareness of pinch points associated with the silo port cover.**
- **Wear appropriate work gloves.**

WARNING 2

Hazard: **The inside of the silo is a confined space.**

Control: **Do not break the plane of the silo opening while taking a measurement.**

$ **[d]** Verify amount of cement in silo is less than or equal to ¼ of silo capacity by measuring from the low side of the port to the top of the cement level inside the silo,
AND record the measurement and time the measurement was taken on Attachment A.
(This measurement shall be ≥ 177 inches.)

[e] IF the measurement is less than 177 inches,
THEN notify the Operations Center.

[f] Replace the cover on the access port,
AND climb down to ground level.

[g] Note the measurement in the cement logbook.

[h] Notify security that checking the level in the cement silo is complete.

[i] Turn the original of Attachment A into Operations Center.

Attachment A, Filling the PF-53 Cement Silo Acceptance Sheet

NOTE The amount of cement in the cement silo shall be limited to less than or equal to ¼ of the silo capacity at all times for conservatism.

SR 4.1.3.5: VERIFY that the PF-53 cement silo level is ≤ ½ of silo capacity.

Frequency: Within 4 hours of adding cement to the PF-53 cement silo

NOTE The measurement recorded below ensures that the amount of cement in the cement silo is less than or equal to ¼ of the silo capacity.

[1] Record the time that the cement is in the Silo and has been filled and dissipated.

Time: _____ AM/PM

[2] Record the time that the measurement is taken:

Time: _____ AM/PM

$ **[3]** Record the measurement from the low side of the port to the top of the cement level inside the silo.

Level: _____ inches _____
(Level shall be ≥ 177 inches.) Initials

[4] IF the measurement is less than 177 inches,
THEN notify the Operations Center.

Surveillance Test Procedure Acceptance			
Date of Test:		(unless already listed elsewhere on the attachment)	
Test Results:	SATISFACTORY/UNSATISFACTORY (circle one)		
Surveillance Personnel:			
	Signature/Z#/date		
OC Operator:		**OC On-Duty Supervisor:**	
	Signature/Z#/date		Signature/Z#/date
Surveillance Test Results Review			
System Engineer:			
	Signature/Z#/date		
Comments			

Attachment B, Cement Run Sheet

NOTE Attachment B may be used to record information for later transcribing into WCATS.

Date_____ Workers_____ Drum #_____

Tare_____ Filter_____ Scale_____

TK to FT Transfer

TK___ to FTx_____ Vol_____ TK___ to FTy_____ Vol_____

Other waste ID#_____ Gross_____ Tare_____ Net_____

pH probe #_____

7 Lot # _____ 10 Lot # _____

7 Exp date _____ 10 Exp date_____

Titration 1

_____L EV + total volume with NaOH _____ pH_____

Vol of NaOH_____ NaOH/EV ratio _____

Remainder FTx to drum_____ Total FTx to drum_____

Pu_____ Am_____

Titration 2

_____L EV + total volume with NaOH _____ pH_____

Vol of NaOH_____ NaOH/EV ratio _____

Remainder FTy to drum_____ Total FTy to drum_____

Pu_____ Am_____

Drum pH adjust Final pH in drum_____

Cement

Starting vol_____ Starting wt_____

Cement wanted: actual vol (L) x ____ kg/L x 2.2 lb/kg = _____lbs

Expected final weight_____

Timer: cement wanted lbs/___ lbs/min= _____ min

Additional time needed_____ Final weight_____

Attachment C, Performance Checklist

Page 1 of 2

Course:	**Session:**

Procedure No.: PMT2-DOP-CF-007,R3 Title: Cement Addition Operations for Cement Fixation

Task Hazard Level ☐ Minimal ☐ Low ☒ Medium ☐ High ☐ Mission-critical

Worker's Name: _____ Z number _____

☐ Worker has completed the following training prerequisites: _____
(Verifier's name and Z number)

☐ PMT2-DOP-CF-009, *Inspection of Treatment, Storage, and Disposal Units for Cement Fixation and Tank Storage*

☐ Plan 256: RCRA Hazardous/Mixed Waste Worker Training

☐ LANL course 12985 "Ladder Safety" training

☐ _____

Task #	Emergency Actions	Instruction	Evaluation
1	Discuss what can be done in case of an emergency.	☐	☐
	Comments		

Task #	Hazards and Controls	Instruction	Evaluation
1	Describe the hazard associated with nuclear criticality and how to minimize it.	☐	☐
2	Describe the hazard associated with ionizing radiation and how to minimize it.	☐	☐
3	Describe the hazard associated with alpha contamination and how to minimize it.	☐	☐
4	Describe the hazard associated with tripping and how to minimize it.	☐	☐
5	Describe the hazard associated working on elevated platforms and how to minimize it.	☐	☐
6	Describe the hazard associated with operating equipment and how to minimize it.	☐	☐
7	Discuss the hazards associated with working with cement powder and how to minimize it.	☐	☐
	Comments		

Attachment C, Performance Checklist

Page 2 of 2

Task #	Procedural Steps	Instruction	Evaluation
1	Discuss how to measure the cement level inside the silo. (Attachment A)	☐	☐
2	Demonstrate and/or discuss checking and cleaning the dayhopper screen.	☐	☐
3	Demonstrate and/or discuss filling the dayhopper with cement.	☐	☐
4	Discuss performing cementation.	☐	☐
5	Discuss what to do if the cement paste becomes too thick for adequate mixing.	☐	☐
6	Discuss what to do if the cement weight is higher than the target ratio.	☐	☐
7	Discuss what to do if the cement weight is below the target weight.	☐	☐
8	Discuss how to estimate the final drum weight during cement addition and what to do if the estimate exceeds 852 lbs.	☐	☐
	Comments		

Signature Approvals

Worker's Name (Last, First, Middle Init.)	**Signature**	**Z #**	**Group**	**Date**

(Your signature indicates that you are confident to safely and independently perform work relative to this procedure.)

Instructor's Name (Last, First, Middle Init.)	**Signature**	**Z #**	**Group**	**Date**

(Your signature indicates that you are confident that the worker indicated above is adequately prepared for a performance evaluation.)

Evaluator's Name (Last, First, Middle Init.)	**Signature**	**Z #**	**Group**	**Date**

(Your signature indicates that you are confident that the worker indicated above has been adequately trained to safely and independently perform work relative to this procedure.)

PMT2-DOP-CF-008, R4 Particulate Waste Certification and Cementation

LA-UR-14-24636

MET-1

Detailed Operating Procedure

Approval Cover Sheet

Document number: PMT2-DOP-CF-008, R4

Effective date: 01/25/13

Next review date: 01/25/16

Supersedes:

Title: Particulate Waste Certification and Cementation

Status:	Hazard:	For Document Control Use Only:
☐ New	☐ Low-hazard	
☒ Major revision	☒ Moderate-hazard	
☐ Minor revision	☐ High-hazard/complex	
☐ Review, no change	**Use Type:**	
	☒ Reference ☐ Use every Time	
	☐ WR (Use every Time)	

	Organization	Date	Signature
Written By:			
Casey Finstad MET-1 Engineer	MET-1	10/10/12	SIGANTURE ON FILE
Approved for Use By: Responsible Line Manager:			
Kent Abney MET-1 Group Leader	MET-1	01/25/13	SIGNATURE ON FILE
Authorized for Use By: FOD:			
Chuck Tesch Operations Manager	TA55-OPS	01/25/13	SIGNATURE ON FILE

☒ Unclassified ☐ Restricted Data ☐ Confidential ☐ Formerly Restricted Data ☐ Secret ☐ National Security Information ☐ Unclassified Controlled Nuclear Information ☐ Official Use Only	**Derivative Classifier:** **Name:** Darren Quintana (Signature on File) **Title:** MET-1/DC **Date:** 01/25/13 **Derived from:**

Revision History

Document Number	Effective Date	Action	Description
PMT2-DOP-CF-008, R4	01/25/13	Major Revision	• Repealed the part of previous IPC that removed size reduction as an option. • Rolled-up of the part of previous IPC that provided additional directions for non-discardable items. • Updated references
PMT2-DOP-CF-008, R3-IPC1	3/27/12	IPC	Added 'subMBA' as a valid destination for discardable material.
PMT2-DOP-CF-008, R2-IPC1	2/16/12	IPC	• Removed mechanical crushing as an option for size-reduction • Clarified destination of material depending on results of NDA.
PMT2-DOP-CF-008, R1	5/31/11	Major Revision	Reformatted to DOP standard. Incorporated IPC modifications from previous document. Removed instructions for if waste item entered as non-waste item. Removed Caution concerning wattage limit. Removed the limit on containers larger than 5 liters. Replaced MASS with LANMAS and WMS with WCATS. Removed attachment on MASS instructions. Removed the exception for very dense particulates. Supersedes PMT2-DOP-CF-008,R0-IPC-1.
PMT2-DOP-CF-008, R0 IPC-1	12/01/2010	IPC	Removed requirement to weigh the particulate before adding to drum. Added possible blend/split operation. Added possible crusher operation. Supersedes PMT2-DOP-CF-008,R0.
PMT2-DOP-CF-008, R0	12/18/2008	New	Reformatted to IMP 300. Incorporated FOD and RP-1 safety recommendations. Supersedes NMT2-WI-009-CF-913,R2 and NMT2-IWD-WI-009-CF-913,R2.

Table of Contents

1.0 INTRODUCTION 4

1.1 Purpose 4
1.2 Scope and Applicability 4
1.3 Applicability 4
1.4 Technical Safety Requirements 4

2.0 PRECAUTIONS AND LIMITATIONS 5

2.1 General 5
2.1 General, (continued) 9
2.2 Additional Requirements and Conditions (WR Use) 9

3.0 PREREQUISITE ACTION 10

3.1 Planning and Coordination 10
3.2 Performance Documents 10
3.3 Special Tools, Equipment, Parts, and Supplies 11
3.4 Field Preparation 11
3.5 Approvals and Notifications 11

4.0 ACCEPTANCE CRITERIA 12

5.0 PERFORMANCE 12

5.1 Material Introduction 12
5.2 Pre-Inspection Options for Vault Residues 13
5.3 Inspecting and Certifying Particulates 14
5.4 Adding Particulate Wastes to the Drum 18
5.4 Adding Particulate Wastes to the Drum (continued) 19

6.0 POST-PERFORMANCE ACTIVITIES 19

6.1 Testing 19
6.2 Restoration 19
6.3 Results 19
6.4 Independent Verification 19
6.5 Records Processing 19

7.0 CONTINGENCIES 19

8.0 DEFINITIONS AND ACRONYMS 20

9.0 RESPONSIBILITIES 21

9.1 Waste Generator 21
9.2 CF Process Operator 21
9.3 NCO-2 First Line Manager (FLM) 21
9.4 MET-1 Responsible Engineer 21

10.0 REFERENCES 22

11.0 RECORDS 23

12.0 APPENDICES AND ATTACHMENTS 23

Attachment A, Performance Checklist 24

1.0 INTRODUCTION

1.1 Purpose

Define the steps by which particulates are examined, certified and disposed of via cement fixation by personnel from the Cement Fixation (CF) process.

1.2 Scope and Applicability

This procedure is performed at TA-55, PF-4, Room 401, in location CF by NCO-2 personnel assigned to the CF process. Examination and certification may also be performed at the waste generator's glovebox (GB) location, and size reduction may be done in room 420 per PMT2-DOP-CLO-001. The particulate waste may be non-soluble or soluble and in an acidic or basic pH form. The particulate may be residues or waste items from the vault or a waste generator's safe, glovebox or floor location.

1.3 Applicability

A. This procedure is intended to produce a cemented waste form that complies with the Waste Isolation Pilot Plant (WIPP) Waste Acceptance Criteria as defined in Transuranic Waste Acceptance Criteria for the Waste Isolation Pilot Plant, DOE/WIPP-02-3122, for contact-handled TRU waste.

B. The CF process and this procedure are subject to the quality assurance program plan specified in TA55-PLAN-046, *Quality Management Plan*, and 10 CFR 830, Nuclear Safety Management Quality Assurance.

C. This procedure is subject to the Central Characterization Project (CCP) procedure CCP-QP-016, CCP Control of Measuring, Testing, and Data Collection Equipment.

D. This procedure is intended to produce a cemented waste form that meets the Resource Conservation and Recovery Act (RCRA), definition of a non-mixed waste as defined 40 CFR, Parts 260 through 273, Solid Waste, as amended by the Hazardous and Solid Waste Amendments. Hazardous waste regulation and enforcement in New Mexico is performed by the New Mexico Environmental Department (NMED) under 20 NMAC 4, New Mexico Hazardous Waste Act.

1.4 Technical Safety Requirements

Not Applicable.

2.0 PRECAUTIONS AND LIMITATIONS

2.1 General

A. Pause/Stop Work

All workers are responsible for pausing or stopping work when they have a reasonable belief that quality, work risks or hazards are not effectively controlled and workers have the right to do so without fear of reprisal. LANL Policy P101-18 provides more information on the differences between pausing or stopping work and the process for resuming work in either case

If this procedure cannot be completed as written or abnormal conditions are encountered, PAUSE WORK, place the work in a safe configuration if possible, and notify the Operations Center (OC) and First Line Manager (FLM).

B. Hazards and Controls

Hazards and controls that are associated with this procedure are embedded in the procedural steps. The following table identifies those hazards and controls that are not tied to a specific step:

Hazard	Controls
Nuclear Criticality Accident	• See applicable CSLA for a list of controls (administrative and engineering feature requirements), see Section 10, *References*.
Ionizing Radiation and Contamination	• Radiation Protection Requirements are detailed in TA55-RD-555 • Follow radiological postings • Radiological Control Technicians (RCTs) are notified to perform a radiation survey when transferring radioactive material that could cause a new radiation area or high radiation area to be created. • As Low as Reasonably Achievable (ALARA) principles are to be used (time, distance, and/or shielding) to minimize dose to workers • Correct personnel protective equipment (PPE) is to be used • Radiation Work Permits (RWPs) are required when dose rates ≥ 75 mrem/hr at 30 cm or ≥ 700 mrem/hr on contact

B. Hazards and Controls, (continued)

Hazard	Controls
Regulated Waste: This work takes place within the TSD Unit. A TSD Unit is a permitted or interim status hazardous waste management unit where hazardous or mixed waste regulated by the Resource Conservation and Recovery Act (RCRA) may be stored or treated before disposal.	• The CF Process must comply with New Mexico State-regulated requirements for operation and inspection. Requirements include inspections to ensure safe operation. This inspection procedure is found in PMT2-DOP-CF-009. • Manage waste in compliance with regulations. Specific waste controls are available at http://swrc.lanl.gov/int.lanl.gov/environment/waste/. Additional waste management information is available at http://swrc.lanl.gov. • Plan 256: RCRA Hazardous/Mixed Waste Worker Training • During walk-arounds, watch for evidence of leaks. • Cementation removes the characteristics of toxicity.
Hazardous chemicals: • Exposure to hazardous chemicals and waste containing hazardous materials can result if containment (GB, gloves, etc.) is breached or if transfer lines leak. • Many of the wastes processed in the CF GB contain acids and heavy metals (cadmium, chromium, and lead). The controls provided by TA55-RD-555 are effective in preventing exposure to hazardous chemicals.	To minimize the hazards from dangerous chemicals: • The glovebox (GB) is an engineering control that protects the worker from exposure to hazardous chemicals in addition to preventing radioactive contamination • Eye wash is required to be within 10 seconds travel time of any work with acids or bases performed outside the GB. • Shower is located within 100 feet of the GB. • Experienced and trained personnel make use of Material Safety Data Sheets (MSDS) to acquaint themselves with chemicals they are handling. • Wear PPE (chemical resistant gloves, safety glasses, safety shoes, etc.) appropriate to the material being handled. • Engineered containment (glovebox, pipes). • Frequent inspection of the Treatment, Storage, and Disposal (TSD) area to keep personnel abreast of changing conditions. • During walk-arounds, evidence of leaks is looked for. • Hazardous and toxic materials are stored in appropriate containers with proper labels. • Barriers observed in hazardous waste areas. • Guidelines are followed in TA55-RD-539 and P409. • Formal hazardous waste training is mandatory.

B. Hazards and Controls, (continued)

Hazard	Controls
Elevated workspace: Personnel must step onto an elevated work platform to operate GB equipment. The stand is secured to the GB with a mechanism that allows the platform to be removed for access to the drum during drum-out. There is also an elevated walkway behind the GB. • When entering or leaving the platform or walkway, personnel may trip, fall or stumble. If detached from the GB, the platform may roll away while personnel are on it.	• Before climbing onto the rollable elevated work stand, attach it to the GB stand. • Signs are posted to alert personnel to the tripping hazard. • When in elevated areas, personnel should use appropriate caution.
Ergonomic Issues: The activities and operations included in the scope of this DOP require the work to be performed in a glovebox. Because of the nature of working through gloveports, the workers range of motion is restricted and causes increased stress on the musculoskeletal system. This results in an increase injury risk and thus ergonomic guidance is necessary including both engineering controls and administrative controls.	• Try to avoid use of tools with very small grips, such as allen wrenches without handles. Adapt tools to increase grip diameter or ask for assistance from the ergonomics team if tools require a pinch grip. Increase break frequency if work requires pinch gripping. • Workers should take breaks on a regular schedule, every 30 minutes for 2-5 minutes • Items that need to be moved that weigh over 15 lbs should have either a lifting assistive device or a second person to assist. • Practice good housekeeping and organize process equipment and materials to help avoid awkward motions. • Individuals that are less than 5ft 8 in should use step platforms when centerline gloveport height is 52 in. Use anti-fatigue mats to reduce leg and back strain. • Workers should be familiar and follow the ergonomic guidance in P101 -28, section 3.3. Glovebox safety program.

2.1 General, (continued)

C. Unique Entry Conditions

Not Applicable

D. Basis for Use Categorization/Sequence of Steps

This procedure is routinely used and was determined to be a Reference use category.

The steps and Sections in the Performance Section are to be performed in sequence unless otherwise stated.

E. Criticality Safety Limit Approval (CSLA) Requirements

In this DOP, steps associated with criticality issues are marked with an asterisk (*) in the margin.
See the Criticality Safety Limit Approvals (CSLA's), referenced in section **10.0**, *REFERENCES*, for specific criticality safety requirements:

F. Required Permits

NMED Permit to operate as a TSD Unit.

Radiation Work Permits (RWPs) are required when dose rates ≥ 75 mrem/hr at 30 cm or ≥ 700 mrem/hr on contact.

G. Training and/or Qualifications

Operators must be qualified to this procedure or in supervised qualification on this procedure. Operator qualification is documented on Attachment A, *Performance Checklist*.

H. Cautions

Not Applicable.

2.1 General, (continued)

I. Material Control and Accountability

This procedure complies with the *Material Control and Accountability Plan* (NMCA-FSD-001) and TA55-AP-585, *Nuclear Materials Control and Accountability Implementation Plan.* Receipt or shipment of material is accompanied by appropriate Local Area Nuclear Material Accountability Software (LANMAS) transactions and manifests.

Because the drum is attached to the GB system, to prevent any unauthorized personnel from diverting nuclear material out through a cemented drum, the process operation also requires the following:

- If the cementation GB is unattended, it is locked. Only the CF and EV operations have keyed access to DB-424 in PF-4. The CF GB has a combination lock, the combination to which is known only by CF personnel.
- When the CF process is running, two HRP certified operators must be present.
- CF personnel inspect the particulate feed material to ensure no foreign objects are being diverted out through CF.
- The gross weight of the item and container must agree to within +/- 10 grams with the initial weight obtained during the initial inspection of the item at the generator's GB.

Items are accepted and coded according to the Process Monitoring Flow Diagram (PMFD) for the CF Process/Status. See Section **10.0**, *References*, for identification of the relevant PMFD.

2.2 Additional Requirements and Conditions (WR Use)

Not Applicable.

3.0 PREREQUISITE ACTION

The sections and the steps in the Prerequisite Action section are not required to be performed in sequence, unless otherwise stated.

3.1 Planning and Coordination

[1] Ensure that a pre-job brief has been conducted in accordance with PA-AP-01020, *TA-55 Pre-Job Briefing and Post Job Review*.

[2] Obtain permission from the Operations Center before conducting a Surveillance Test procedure (STP), In-Service Inspection (ISI), or Administrative Surveillance Instruction (ASI) surveillance

[3] Schedule the work with the Facility Operations Director organization.

[4] The Worker is responsible for ensuring that they are working to the most current procedure and complies with document control processes concerning copying, marking, and final disposition.

[5] Ensure that tool, equipment, and material numbers in the work area match those specified

[6] Per section **2.1.0**, two HRP certified operators are required to be present while this procedure is being performed. One of the operators may be in training as outlined in section **2.1.G**.

3.2 Performance Documents

The following documents may be required for the completion of this procedure:

- PMT2-DOP-CLO-001, *Size Reduction*
- TA55-AP-522, *TA55 Nuclear Criticality Safety Program*
- TA55-AP-585, *Nuclear Materials Control and Accountability Implementation Plan*
- TA55-DOP-016, *TA55 Material Transfer Procedure*
- TA55-DOP-024, *Trolley Hoist Conveying System*
- TA55-DOP-030, *Introducing Items Through a Pencil Drop or Hood Into Gloveboxes in PF-4*
- TA55-DOP-026, *Operating Electronic Balances*
- TA55-PMFD-01030, *Cement Fixation (CF) MBA 743*
- TA55-RD-539, *TA-55 Waste Management*

3.3 Special Tools, Equipment, Parts, and Supplies

Equipment

- Furnace or oven for drying. As this is equipment is only used to dry waste material, precise or accurate temperature control and measurement is not required. Calibration is not required.

Tools and Fixtures

- Temporary container to be used while the original item container is being tared.
- Suitably-sized stainless steel container for particulate wastes (may be original container)
- Hand tools for size-reducing particulate or fibrous material (ex. 8-mesh screen with bottom pan, mortar and pestle, scissors). Screen does not require calibration.
- Heavy gloves for sharps protection (Hexarmor or similar)
- Lead shielding for high dose items as needed
- Forceps for segregation

Measuring and Test Equipment

- Calibrated and certified weigh scale with range of 0 to 1000 grams. All equipment used to perform MC&A is maintained and calibrated by NPI-1. Ensure calibration is current before use. This may be accomplished by checking LANMAS.

3.4 Field Preparation

The item must be inspected by CF personnel for suitability for cementation. The CF personnel may require one or more of the following pretreatments:

- Particle size reduction by the generator
- Crushing and pulverizing by room 420 personnel
- Blending and splitting the item by room 208 personnel to reduce the item into Pu amounts suitable for a single drum (<150 g Pu).
- Drying (calcination)
- Segregation of different matrices

3.5 Approvals and Notifications

Not Applicable.

4.0 ACCEPTANCE CRITERIA

Prior to accepting the item for submittal for NDA, the CF inspector must verify the following conditions are met:

- Correct particle size (< 8 mesh - ½ inch) Visual determination is adequate; it is not necessary to use a calibrated screen to confirm this.
- Dry and free-flowing
- Single matrix (crucible acceptable as second matrix)

Prior to accepting the item for cementation, the generator must obtain and supply to the CF personnel a current Calorimetry/Isotopic (CAL/ISO) analysis. Verify that the following condition is met:

- The Pu content is low enough to result in a drum with ≤150 g Pu when added to the other wastes planned for the drum.

5.0 PERFORMANCE

NOTE The steps within each subsection, must be performed in order, but the subsections themselves may be performed out of order or may be skipped. Additionally, work covered by other procedures may be performed in between subsections.

5.1 Material Introduction

[1] IF introducing the item into the GB line (TA55-DOP-30, *Introducing Items Through a Pencil Drop or Hood Into Gloveboxes in PF-4*) and transferring it via trolley (TA55-DOP-024, *Trolley Hoist Conveying System*) to the appropriate GB location for inspection and certification or to a secondary location for pre-certification storage

* THEN perform the following according to TA55-AP-522 and TA55-DOP-016:

[a] Determine the quantity of SNM that is currently present in the destination. LANMAS may be used as an aid for this determination

* **[b]** Before physically moving fissile material, check that the transfer will not cause the criticality safety limits to be exceeded in the destination workstation or other workstations en route. Perform a LANMAS transaction to aid in determining compliance.

* **[c]** Ensure that the criticality tag board accurately represents the amount of SNM that is currently in the glovebox location to be used.

WARNING

Hazard: Ergonomic risk if moving items heavier than 15 lbs in glovebox.

Control: Consider assistive devices.

[d] Introduce the item and transfer the item to the destination box.

* **[e]** Update the criticality tag board to accurately represent the amount of SNM that is now in the glovebox location.

5.2 Pre-Inspection Options for Vault Residues

NOTE 1 The CF personnel are typically considered the generator for vault residues.

NOTE 2 For vault items, preliminary information may exist (process knowledge, feed list or LANMAS information), from which the Subject Matter Expert (SME) can judge with reasonable confidence without an inspection how the item should handled prior to cement fixation.

NOTE 3 The following actions accept some risk that the decision based on preliminary information is in error.

NOTE 4 Use Guidance in TA55-DOP-016 when crossing MBA boundaries.

[1] IF the items cannot be easily sized-reduced
THEN contact Waste Services for instructions
AND send them to Waste Services for disposal in a solid waste drum.

[2] IF the item ID indicates the item probably contains “rocks” that cannot be manually size-reduced by the CF generator (pyro salts),
THEN introduce the item into the GB line per TA55-DOP-030,
AND using the trolley per TA55-DOP-024, transfer the item to room 420 to be mechanically crushed per PMT2-DOP-CLO-001.

[3] IF the vault feed list indicates the residue contains too much Pu grams for a single drum ($\geq$ 150 g Pu),
THEN introduce the item into the GB line per TA55-DOP-030,
AND using the trolley per TA55-DOP-024 transfer it a GB location to be split by the CF generator.

[4] IF the SME determines that an item needs no physical alteration to meet the acceptance criteria listed in Section **0**,

[5] *Acceptance* Criteria,
THEN transport the item directly to the NDA laboratory for CAL/ISO analysis.

[6] IF the NDA indicates the item is discardable,
THEN send it to Waste Services or subMBA CF for disposal.

[7] IF the NDA indicates the item is NOT discardable,
THEN send it to the vault of the subMBA of origin.

[8] IF the preliminary information is found to be in error,
THEN go back to the beginning of section **5.2**, *Pre-Inspection Options for Vault Residues*.

[9] IF not already done
THEN introduce the item into the GB line per TA55-DOP-030
AND using the trolley per TA55-DOP-024 transfer the item to a GB location at which the inspection and certification is to take place.

5.3 Inspecting and Certifying Particulates

NOTE 1 For items already in-line due to recent generation, the following inspection and certification of an item typically takes place in the generator's GB.

NOTE 2 For items that are coming from outside the GB system (vault) that must be introduced into the GB system, the inspection and certification operation typically takes place in a GB used by the CF personnel. CSLA-approved locations for this activity are DB424 and GB 434.

NOTE 3 The NDA laboratory will enter the assay into WCATS.

[1] Record in the CF logbook (based on information obtained from the generator, or in the case that CF is the generator, from LANMAS or the vault feed list) all identifying information for the item including ID #, Process/Status, matrix, RCRA-hazardous characteristics and generator contact information.

[2] Have the generator open the item container and manipulate the item to permit its inspection by the CF personnel.

[3] Confirm that the item meets the following acceptance criteria for cement fixation:

- Correct particle size (< 8 mesh - ½ inch diameter). Visual determination is adequate; it is not necessary to use a calibrated screen to confirm this.
- Dry and free-flowing (to permit inspection for foreign objects)
- Single matrix (crucible acceptable as second matrix)

[4] IF the item requires further physical alteration (segregation, drying, size-reduction) to meet the acceptance criteria,
THEN proceed as follows:

WARNING 1

Hazard: Using hands to size reduce the item present an ergonomic risk and a risk of being injured by sharps.

Control: Use a tool for breaking up clumps instead of hands.

WARNING 2

Hazard: Using tools for breaking up clumps may present an ergonomic risk and a risk of being injured by the blunt force of the tool (mortar and pestle).

Control: Wear heavy gloves (Hexarmor or equivalent) as needed. Use caution with handling tools. Frequent breaks are recommended to avoid fatigue

5.3 Inspecting and Certifying Particulates, (Continued)

NOTE 1 The particles only need to be small enough to ensure that the material remains non-attractive from a safeguards and security standpoint and that the particle size does not interfere with the mixing blades. The most desirable particle size is minus 8 mesh, however, sizes as large as ½ inch diameter may be accepted at the discretion of the CF personnel.

NOTE 2 Materials that are not amenable to screening, such as fibrous material and filter paper, must be manually size reduced to approximately 1-inch diameter sizes.

[a] IF the item requires size-reduction that cannot be accomplished by the generator,
THEN proceed as stated above in step **5.1[2]** for size-reduction at a GB location in room 420.

[b] IF the physical alteration can be performed by the generator,
THEN proceed using the suitable tool(s).

- Use a furnace, oven or air drying to dry damp material.
- Use a mortar and pestle for size reduction of rock.
- Use scissors (preferred for ergonomic safety) or tearing by hand for size reduction of paper or rags.

NOTE Whenever items are split into multiple containers (the following two bullets) the subsequent steps in this section are performed for each item. Each container should contain an estimate of no more than 100 grams Pu

- Manually pour items to be split into an additional container(s).
- Use forceps to handle Sharps requiring segregation.

[5] Have the generator obtain the tare weight of the item's container using a calibrated weigh scale per TA55-DOP-026.
IF the container to be tared already contains material,
THEN the generator must pour the particulate material into a temporary second container while the original container is tared. The particulate material is returned to the original container after the tare weight has been obtained.

[6] Have the generator determine the gross weight of the waste item and its container.

[7] Have the generator estimate the volume of the container and waste item.

[8] Record (upon agreement that the values are correct) the values in the CF logbook and on the container.

[9] Have the generator close the container, tape the top of the container closed with vinyl tape, and label the container with the item ID.

5.3 Inspecting and Certifying Particulates (Continued)

[10] Initial (CF examiner) the tape where it overlaps.

NOTE The following WCATS information may be performed at a later time, but before the actual cementation of the item.

[11] Enter the item into WCATS and indicate the visual inspection (VI) was performed. Enter all descriptive information for the item requested by WCATS. Electronically attach a discard justification memo if necessary.

[12] Ensure the item information (location, SNM, IDES) on WCATS matches that on LANMAS.

[13] IF the item has not been NDA'ed in step **5.2[4]**,
THEN have the generator transfer and submit the item to the NDA laboratory for CAL/ISO analysis.

- **[a]** Have the generator retrieve the item from the NDA laboratory.
- **[b]** Have the generator transfer the item to the appropriate GB location for storage or to the CF location for cement fixation per step **5.1**.

5.4 Adding Particulate Wastes to the Drum

NOTE 1 All particulates, soluble or insoluble are added to the waste drum before the evaporator (EV) bottoms waste, non-evaporator waste solution, water, and sodium hydroxide are added. As the acidic EV Bottoms is added to the drum, this results in dissolution and dispersion of particulates that are soluble in acid, such as hydroxide cakes. Any material that is re-precipitated as a result of the subsequent pH adjustment into the basic pH range is suspended and dispersed in the liquid by the stirring action of the mixer, and micro-encapsulation in the cement is ensured.

NOTE 2 This procedure assumes the primary waste being cemented is EV Bottoms liquid. If this is not the case, consult with the SME for instructions.

NOTE 3 If the CF process was assigned as the generator (for example, the item was retrieved from the vault), then the confirmatory re-weighing in step **5.4[1]** below is not required. If the item has not left the custody of the CF personnel since inspection, then re-weighing is not required.

[1] IF the item has had a previous gross weight obtained during step **5.3[6],** THEN verify that the gross weight of the item is within 10 grams of the weight obtained at the original certification.

[a] IF there is a discrepancy greater than ±10 grams, THEN the item must be re-NDA'ed and recertified.

[2] Record the weight in the CF Logbook and in the Note Field Box on WCATS.

[3] Place all particulates for the drum close to the drum, but where they will not be accidentally knocked into the drum.

[4] Before adding the particulates to the drum, open the cans and inspect the contents for potentially diverted material or unusual objects.

[5] In association with adding the particulate to the cement drum, perform the following according to TA55-AP-522 and TA55-DOP-016:

[a] Determine the quantity of SNM that is currently present in the drum.

* **NOTE** The criticality limit for the cement drum is ≤200 grams Pu in any form per the CSLA (see section **10.0**, *References*).

[b] Before physically moving fissile material, check that the transfer will not cause the criticality safety limits to be exceeded in the drum.

5.4 Adding Particulate Wastes to the Drum (continued)

NOTE The criticality tag board reflects GB and drums combined.

* **[c]** Ensure that the criticality tag board accurately represents the amount of SNM that is currently in the GB and drums.

[6] Add the particulate by slowly pouring it out of the container into the drum.

NOTE The drum is now ready for the next phase of the operation, which is adding the liquid wastes to the drum. See PMT2-DOP-CF-005 and/or PMT2-DOP-CF-006.

6.0 POST-PERFORMANCE ACTIVITIES

6.1 Testing

Not Applicable.

6.2 Restoration

[1] Return the empty container to the generator for reuse or disposal.

6.3 Results

[1] Record information for the item and the drum in the CF logbook and in WCATS.

6.4 Independent Verification

Not Applicable.

6.5 Records Processing

See Section **11.0**

7.0 CONTINGENCIES

Not Applicable.

8.0 DEFINITIONS AND ACRONYMS

Term	Definition
ALARA	As Low As Reasonably Achievable
CAL/ISO	Calorimetry/Isotopic
CCP	Central Characterization Project
CF	cement fixation
CFR	code of federal regulations
CSLA	Criticality Safety Limit Approval
DOE	Department of Energy
DOP	detailed operating procedure
EV	evaporator
GB	glovebox
ID	identifier
IDES	Item Description Number
LANMAS	Local Area Nuclear Material Accountability Software
MET-1	Actinide Processing Support group
NCO-2	Actinide Process Chemistry group
NDA	nondestructive assay
NMED	New Mexico Environmental Department
PMFD	Process Monitoring Flow Diagram
PPE	personal protective equipment
RCRA	Resource Conservation and Recovery Act
RCT	radiological control technician
RWP	radiological work permit
SME	subject matter expert
SNM	special nuclear material
TRU	transuranic
TSD	Treatment, storage and disposal
VI	Visual inspection
WIPP	Waste Isolation Pilot Plant
WCATS	Waste Compliance and Tracking System

9.0 RESPONSIBILITIES

9.1 Waste Generator

- Responsible for providing the particulate item
- Responsible for providing the characterization data for the particulate item to the CF Process Operator.
- Responsible for presenting the particulate item to the CF Process Operation for visual inspection and weighing.

9.2 CF Process Operator

- Responsible for serving as Waste Generator in cases of vault items.
- Responsible for safely performing the steps per this procedure and pausing or stopping work if the procedure cannot be completed as written.
- Performing LANMAS transactions

9.3 NCO-2 First Line Manager (FLM)

- Responsible for ensuring workers are properly trained.
- NCO-2 FLM may also be an operator.

9.4 MET-1 Responsible Engineer

- Responsible for technical support
- The engineer may also be an operator

10.0 REFERENCES

Document Number	Title
NMCA-FSD-001	Material Control and Accountability Plan
10 CFR 830	Code of Federal Regulations - Nuclear Safety Management Assurance
20 NMAC 4	New Mexico Hazardous Waste Act (NMHWA)
40 CFR, Parts 260 - 273	Code of Federal Regulations - Solid Waste
CCP-QP-016	CCP Control of Measuring, Testing, and Data Collection Equipment
DOE/WIPP-02-3122	Transuranic Waste Acceptance Criteria for the Waste Isolation Pilot Plant
NCS-CSLA-10-061	Criticality Safety Limit Approval for *FT Tanks at Location CF*
NCS-CSLA-10-062	Criticality Safety Limit Approval for *Cementation Glovebox GB454* (GB454)
NCS-CSLA-10-124	Criticality Safety Limit Approval for *Inspection Activities of PF-4 Vault Particulate Waste Items* (DB424)
NCS-CSLA-11-122	Criticality Safety Limit Approval for *Staging, Splitting, Combining, Weighing, Inspection, and Sampling* (GB434A)
P101-18	Pause/Stop Work Procedure
P409	Waste Management
PMT2-DOP-CF-005	Non-evaporator Solution Operations for Cement Fixation
PMT2-DOP-CF-006	pH Adjustment of Evaporator Bottoms for Cement Fixation
PMT2-DOP-CF-009	Inspection of PMT-2 Treatment, Storage, and Disposal Units for Cement Fixation and Tank Storage
PMT2-DOP-CLO-001	Size Reduction
TA55-AP-522	Nuclear Criticality Safety
TA55-AP-585	Nuclear Materials Control and Accountability Implementation Plan
PA-AP-01020	Pre-Job Briefing and Post-Job Review
TA55-DOP-024	Trolley Hoist Conveying System,
TA55-DOP-026	Operating Electronic Balances
TA55-DOP-030	Introducing and Removing Items From Gloveboxes in PF-4
TA55-PLAN-046	Quality Management Plan (QMP)
TA55-PMFD-01030	Cement Fixation (CF) MBA 743
TA55-RD-539	TA-55 Waste Management

11.0 RECORDS

Record Identification	Record Type Determination	Protection/Storage Methods	Processing Instructions
CF Logbook	Process Data Record	Supervision shall implement a reasonable level of protection to prevent loss and degradation. Records shall be maintained in a metal file cabinet when not in use.	When the records are ready for final disposition, the record is transferred to Records Management and processed in accordance with procedure.
Attachment A, *Performance Checklist*	Training Record	Maintain in training file	Record shall be maintained by the Training Coordinator upon completion of training and qualification. When no longer in use transfer to the DCC for archiving.

12.0 APPENDICES AND ATTACHMENTS

Attachment	Title
A	*Performance Checklist*

Attachment A, Performance Checklist

Page 1 of 2

Procedure Number: PMT2-DOP-CF-008,R4 Title: Particulate Waste Certification and Cementation

Task Hazard Level ☐ Minimal ☐ Low ☒ Medium ☐ High ☐ Mission-critical

Worker's Name: _____ Z number _____

☐ Worker has completed the following training prerequisites _____
(Verifiers name and Z number)

The worker must be qualified on the following procedures and training plans.

☐ _____

☐ _____

☐ _____

☐ _____

☐ _____

☐ _____

☐ _____

Qualification Requirements

Task #	Emergency Actions	Instruction	Evaluation
1	Describe the response to an emergency shutdown.	☐	☐
	Comments	☐	☐
Task #	**Hazards and Controls**	**Instruction**	**Evaluation**
1	Describe the hazard associated with nuclear criticality and how to minimize it.	☐	☐
2	Describe the hazard associated with ionizing radiation and how to minimize it.	☐	☐
3	Describe the hazard associated with alpha contamination and how to minimize it.	☐	☐

Attachment A, Performance Checklist

Page 2 of 2

Task #	Hazards and Controls	Instruction	Evaluation
4	Describe the hazard associated with the elevated work platform and how to control it.	☐	☐
5	Describe the hazard of working with hazardous chemicals and how to control it.	☐	☐
6	Describe the ergonomic hazard and how to control it.	☐	☐
	Comments	☐	☐
Task #	**Procedural Steps**	**Instruction**	**Evaluation**
1	Describe the acceptance criteria for particulates to include in a cement drum.	☐	☐
2	Demonstrate or discuss how to verify the item weight and the acceptable limits.	☐	☐
3	Demonstrate or discuss when the particulate wastes are added to the drum.	☐	☐
4	Demonstrate or discuss when the evaporator bottoms are added to the drum.	☐	☐
	Comments	☐	☐

Signature Approvals

Worker's Name (Last, First, Middle Init.)	**Signature**	**Z #**	**Group**	**Date**

(Your signature indicates that you are confident to safely and independently perform work relative to this procedure.)

Instructor's Name (Last, First, Middle Init.)	**Signature**	**Z #**	**Group**	**Date**

(Your signature indicates you are confident the worker indicated above is adequately prepared for a performance evaluation.)

Evaluator's Name (Last, First, Middle Init.)	**Signature**	**Z #**	**Group**	**Date**

(Your signature indicates that you are confident that the worker indicated above has been adequately trained to safely

PMT2-DOP-CF-009, R3 Inspection of Treatment, Storage, and Disposal Units for Cement Fixation and Tank Storage

LA-UR-14-24635

MET-1

Detailed Operating Procedure

Approval Cover Sheet

Document Number:	PMT2-DOP-CF-009, R3
Effective Date:	3/6/2014
Next Review Date:	3/6/2017
Supersedes:	

Title: Inspection of Treatment, Storage, and Disposal Units for Cement Fixation and Tank Storage

Status:	Hazard:	For Document Control Use Only:
☐ New	☒ Low-hazard	
☒ Major revision	☐ Moderate-hazard	
☐ Minor revision	☐ High-hazard/complex	
	Use Type:	
	☒ Reference ☐ Use every Time	

	Organization	Date	Signature
Written By: David Kimball	MET-1		
Approved for Use By: Document Owner: Kent Abney, *Group Leader*	MET-1	3/5/14	Signature on File
Authorized for Use By: FOD: Charles Tesch, *Operations Manager*	TA55-OPS	3/6/14	Signature on File
Released: FOD: Charles Tesch, *Operations Manager*	TA55-OPS	3/6/14	Signature on File

Derivative Classification Review			
☒ UNCLASSIFIED ☐ Export Controlled Information ☐ Official Use Only ☐ Unclassified Controlled Nuclear Information Guidance Used: N/A		☐ CONFIDENTIAL ☐ SECRET ☐ Restricted Data ☐ Formerly Restricted Data ☐ National Security Information Guidance Used:	
DC/RO Name/Z Number: Keith Fife/095877	Organization: MET-1	Signature: Signature on File	Date: 3/5/14

Revision History

Document Number	Effective Date	Action	Description
PMT2-DOP-CF-009, R3	3/6/14	Major Revision	• Formatting changes throughout to match latest guidance. • Removed spills/leaks from Hazards and Controls table and expounded in Contingencies. • Changes in **5.0** Performance for compliance for Conduct of Operations.
PMT2-DOP-CF-009, R2	6/6/13	Major Revision	• Performed Periodic Review • Updated and modified to match PA-AP-01016 template and to comply with P315; Expanded Applicability, Hazards and Controls, and Planning and Coordination to clarify. • Removed performance checklist and directed trainees to new OJT curriculum. • Inserted new sample IRF and renumbered appendices. • Updated names on call-out list
PMT2-DOP-CF-009, R1	12/13/11	Major Revision	• Updated group names. • Added NMED Permit considerations
PMT2-DOP-CF-009, R0		New Procedure	• Reformatted to IMP 300. • Supersedes NMT2-WI-009-CF-917,R1 and NMT2-IWD-WI-009-CF-917,R0.

Table of Contents

1.0 Introduction 4
- 1.1 Purpose 4
- 1.2 Scope 4
- 1.3 Applicability 4
- 1.4 Technical Safety Requirements 4

2.0 Precautions and Limitations 5
- 2.1 General 5
- 2.2 Additional Requirements and Conditions (WR Use) 7

3.0 Prerequisite Action 7
- 3.1 Planning and Coordination 7
- 3.2 Performance Documents 8
- 3.3 Special Tools, Equipment, Parts, and Supplies 8
- 3.4 Field Preparation 8
- 3.5 Approvals and Notifications 8

4.0 Acceptance Criteria 8

5.0 Performance 9
- 5.1 Conducting the Inspection and Completing the Checklist 9

6.0 Post-Performance Activities 12
- 6.1 Testing 12
- 6.2 Restoration 12
- 6.3 Results 12
- 6.4 Independent Verification 12
- 6.5 Records Processing 12

7.0 Contingencies 12

8.0 Definitions and Acronyms 13

9.0 Responsibilities 14
- 9.1 NPI-7/WMC 14
- 9.2 Inspection Staff 14

10.0 References 14

11.0 Records 15

12.0 Appendices and Attachments 15
- Appendix 1, Permit Considerations 16
- Appendix 2, Item Descriptions for Hazardous and Mixed Waste Facility Inspection Record Form 17
- Appendix 3, TSD Inspection Notifications 21
- Appendix 4, Example of Hazardous and Mixed Waste Facility Inspection Record Form 22

1.0 INTRODUCTION

1.1 Purpose

This procedure provides instructions for performing an inspection of the Cement Fixation (CF) and Evaporation (EV) processes to validate compliance with the Waste Isolation Pilot Plant (WIPP) Waste Acceptance Criteria (WAC) regulations in order to operate as a Treatment, Storage, and Disposal (TSD) Unit.

1.2 Scope

This Detailed Operating Procedure (DOP) describes the requirements and steps for conducting an inspection of the TSD Unit, the hazards and controls for the inspection, and how to document the inspection. This document is NOT intended to address the hazards and controls inherent in the cleanup of spills or leaks. This DOP is performed at TA-55, PF-4, Room 401, locations CF and EV, and the secondary containment area. The inspection portion of this procedure must be performed daily. Daily is defined as every day that Room 401 is in Mode 1 or Mode 2, including weekends and holidays, but not when it is red lit.

1.3 Applicability

This procedure complies with the WIPP WAC as defined in *Transuranic Waste Acceptance Criteria for the Waste Isolation Pilot Plant,* DOE/WIPP-02-3122, for contact-handled waste.

This procedure complies with regulations governed by the Resource Conservation and Recovery Act (RCRA), definitions of a non-mixed waste as defined 40 CFR, Parts 260 through 273, *Solid Waste*, as amended by the Hazardous and Solid Waste Amendments. Hazardous waste regulation and enforcement in New Mexico is performed by the New Mexico Environmental Department (NMED) under 20 NMAC 4, New Mexico Hazardous Waste Act.

1.4 Technical Safety Requirements

Not Applicable.

2.0 PRECAUTIONS AND LIMITATIONS

2.1 General

A. Pause/Stop Work

All workers are responsible for pausing or stopping work when they have a reasonable belief that quality, work risks or hazards are not effectively controlled and workers have the right to do so without fear of reprisal. Los Alamos National Laboratory (LANL) Policy P101-18, *Procedure for Pause/Stop Work,* provides more information on the differences between pausing or stopping work and the process for resuming work in either case.

If this procedure cannot be completed as written or abnormal conditions are encountered, PAUSE WORK, place the work in a safe configuration if possible, and notify the Operations Center (OC) and Responsible Line Manager (RLM).

B. Hazards and Controls

Hazards and controls that are associated with this DOP are embedded in the procedural steps. The following table identifies those hazards and controls that are not tied to a specific step:

Hazard	Controls
Ionizing Radiation and Contamination	• Radiation Protection Requirements are detailed in TA55-RD-555, *TA-55 Radiation Protection Requirements.* • Follow radiological postings. • Radiological Control Technicians (RCTs) are notified to perform a radiation survey when transferring radioactive material that could cause a new radiation area or high radiation area to be created. • As Low as Reasonably Achievable (ALARA) principles are to be used (time, distance, and/or shielding) to minimize dose to workers. • Correct personal protective equipment (PPE) is to be used. • Radiation Work Permits (RWPs) are required when dose rates ≥ 75 mrem/hr at 30 cm or ≥ 700 mrem/hr on contact.

2.1 General (continued)

Hazard	Controls
Hazardous chemicals	To minimize the hazards from dangerous chemicals: • Emergency shower is located in an area that requires no more than 10 seconds to reach. Shower location is in a well-lit area and identified with a sign. • Engineered containment (gloveboxes, pipes). • Frequent inspections of the TSD area keep workers abreast of changing conditions. • During walk-arounds, watch for evidence of leaks. • Hazardous and toxic materials are stored in appropriate containers with proper labels. • Observe barriers in hazardous waste areas. • Follow guidelines in TA55-RD-539, *TA-55 Waste Management Requirements* and P409, *Waste Management.* • Formal hazardous waste training is mandatory (curriculum 256).
Elevated workspace: Personnel may be required to use an elevated platform during the inspection from which a fall can occur.	• Signs are posted to alert personnel to tripping hazards. • Personnel should use appropriate caution in these areas. • Use hand rails on any elevated platform used.

C. Unique Entry Conditions

Not Applicable.

D. Basis for Use Categorization/Sequence of Steps

This procedure is routinely used and was determined to be a Reference Use category.

The steps and sections in the Performance section are to be performed in sequence unless otherwise stated.

* E. Criticality Safety Limit Approval (CSLA) Requirements

In this DOP, steps associated with criticality issues are marked with an asterisk (*) in the margin.

No CSLA requirements are applicable to the performance of this DOP.

2.1 General (continued)

F. Required Permits

Los Alamos National Laboratory Hazardous Waste Facility Permit, EPA ID No. NM0890010515.

A Radiation Work Permit (RWP) is required when dose rates ≥75 mrem/hr at 30 cm or ≥700 mrem/hr on contact.

G. Training and/or Qualifications

This procedure must be performed by a qualified PF-4 Aqueous Nitrate Operator (WQAS #1450) or one complete in the On-the-Job training (OJT), *PF-4 Aqueous Nitrate Ops – Cement Fixation* (OJT 17730). At a minimum, performers of this procedure must have a complete curricula 256, *RCRA Hazardous Mixed Waste Worker*. Provisional authorization is allowed, and must be documented in WQAS.

H. Cautions

Not Applicable.

I. Material Control and Accountability

Not Applicable.

2.2 Additional Requirements and Conditions (WR Use)

Not Applicable.

3.0 PREREQUISITE ACTION

The sections and the steps in the Prerequisite Action Section are not required to be performed in sequence, unless otherwise stated.

3.1 Planning and Coordination

[1] Ensure that a pre-job brief has been conducted in accordance with PA-AP-01020, *Pre-Job Briefing and Post Job Review*.

[2] Schedule the work with the Facility Operations Director (FOD) organization.

[3] The Operation Responsible Supervisor (ORS)/Person In Charge (PIC) is responsible for ensuring that the work **shall** be performed to the most current procedure and associated performance documents.

* **[4]** The PIC, in consultation with workers, is responsible for ensuring that the planned process can be executed in compliance with relevant safety management program (e.g. Criticality Safety, MC&A, Material At Risk (MAR), RadCon, etc.) requirements prior to releasing the work.

[5] Notify the OC before entering PF-4 during off-hours and off-days.

[6] IF PF-4 is in Mode 2,
THEN do NOT enter PF-4 unless approved by the OC.

3.0 PREREQUISITE ACTION (continued)

3.2 Performance Documents

- P101-18, *Procedure for Pause/Stop Work*
- P409, *Waste Management*
- PA-AP-01020, *Pre-Job Briefing and Post-Job Review*
- TA55-RD-555, *TA-55 Radiation Protection Requirements*
- TA55-RD-539, *TA-55 Waste Management Requirements*

3.3 Special Tools, Equipment, Parts, and Supplies

Not Applicable.

3.4 Field Preparation

NOTE When using the call-out list (Appendix 3, *TSD Inspection Notifications*), the first person on the call-out list should be contacted first, working down the list until someone is contacted. Leaving a message on someone's telephone voice message system does NOT constitute a notification.

- IF the team assigned cannot perform a daily inspection,
  THEN notify a person in Appendix 3, *TSD Inspection Notifications*.

3.5 Approvals and Notifications

NOTE Failure to conduct an inspection is an example of a non-compliance with the LANL Hazardous Waste Permit and requires reporting.

[1] IF an inspection is NOT conducted,
THEN notify the TA-55 Resource Conservation and Recovery Act (RCRA) Compliance/Permit Environmental Representative.

4.0 ACCEPTANCE CRITERIA

Not Applicable.

5.0 PERFORMANCE

5.1 Conducting the Inspection and Completing the Checklist

NOTE 1 The TSD area must be inspected every day. The TSD Unit is defined as the Evaporator Glovebox Tank Component, the external CF feed storage (FT) tanks, and the CF processing equipment. The inspection will occur even when the tanks are not storing waste during holidays and Laboratory closures. The inspection can be performed weekly with the approval of the RLM if the tanks will not be storing waste for an extended period.

NOTE 2 The results of the inspection are recorded on the *Hazardous and Mixed Waste Facility Inspection Record Form* (IRF). The IRF consists of a checklist of conditions that are considered necessary for proper containment and control of RCRA hazardous wastes. Detailed definitions of the items contained on the IRF are found in Appendix 2, *Item Descriptions for the Hazardous and Mixed Waste Facility Inspection Record Form*.

NOTE 3 The secondary containment for the TSD Unit includes the floor of room 401 in which the TSD Unit is located.

NOTE 4 The EV bottoms are considered to be waste as soon as they are transferred to the EV bottoms storage tanks (TK) in the EV salt box, and after radiochemistry has been performed and the item is determined to be discardable through the CF process.

NOTE 5 A typical inspection does NOT require touching any surface on which radioactive or hazardous material may be contacted. Therefore, the inspection may be conducted wearing a lab coat. Consult the RCT for further guidance as needed.

NOTE 6 Hazardous Material Management (NPI-7) provides the IRF partially completed with standard information for the specific TSD being inspected.

[1] Obtain the week's IRF from NPI-7 and begin the inspection, using the IRF as a checklist.

5.1 Conducting the Inspection and Completing the Checklist (continued)

[2] Verify the appropriate information in boxes 1 through 5 of the IRF that describes the location and type of TSD Unit. Fill out these boxes as follows:

Box #	Title	Entry
1	Facility	TA55-4-401
2	Site ID #	481, 1225
		TSD
3	Start Date	Date of Monday
4	End Date	Date of Sunday
5		Check boxes for *Tank* and *Miscellaneous Unit (Open Burn/Open Detonation [OB/OD], Cementation)*

NOTE 1 Appendix 2, *Item Descriptions for Hazardous and Mixed Waste Facility Inspection Record Form*, provides descriptions of each inspection item on the IRF.

NOTE 2 Some items on the IRF may NOT apply to the CF/EV TSD Unit. Examples of possible non-applicable items are listed in the table below.

Table 1, Possible Non-applicable Items

Box #	Title	Entry
10	Security	Securing our country (SOC)
14	Wind Sock	Not Applicable (NA)
17	Run-on/off Control	NA
18	Covers/Lids of Containers	NA
20	Compatibility	NA
22	Aisle Space/Stacking	NA
23	Pallets and Raised Containers	NA
25	Shafts/Landfill Covers	NA
26	Open burning Units	NA
27	Open Detonation Units	NA
28	Cementation Units	NA when no treatment occurred that day and there is no un-cemented hazardous waste.

[3] IF room 401 is red lit,
THEN proceed to section **7.0 Contingencies**.

[4] Fill out the IRF as described below.

[a] Write OK in the box for all items inspected on a given day for which no deficiencies were noted.

[b] IF an observation cannot be clearly determined as a deficiency, THEN consult your Waste Management Coordinator (WMC) before marking the IRF with an action required (AR).

5.1 Conducting the Inspection and Completing the Checklist (continued)

NOTE For each AR noted, additional information to clarify the AR must be noted, including work orders, small-job tickets, and memos. Include the type of problem, action required, and date and time that action was taken.

[c] Write AR in the box of any item for which a deficiency was noted.

1. Complete Part II of the IRF to explain the AR entry.

2. IF more than one AR is required,
THEN identify each AR with a sequential number.

3. IF an emergency equipment deficiency is found,
THEN stop work immediately, notify management, and wait for instructions.

4. Enter the AR on subsequent inspection dates until the deficiency is corrected.

5. WHEN the deficiency has been corrected,
THEN state the details in Part II of the IRF.

[d] Enter the date, time, printed name and signature in the IRF in boxes 29 through 31.

[e] Enter document informational comments associated with the current inspection that do NOT require specific regulatory action or remedies in Part III of the IRF.

NOTE The following steps are performed at the end of the IRF inspection period (weekly).

[5] Photocopy the completed IRF and keep the copy for your records.

[6] Submit the original to NPI-7.

6.0 POST-PERFORMANCE ACTIVITIES

6.1 Testing

Not Applicable.

6.2 Restoration

Not Applicable.

6.3 Results

- Ensure results are recorded on the IRF.
- Complete the Post-job Review as per PA-AP-01020, *Pre-Job Briefing and Post Job Review*.

6.4 Independent Verification

Not Applicable.

6.5 Records Processing

See Section 11.0

7.0 CONTINGENCIES

- IF room 401 is red lit
  THEN perform the following actions:

  [a] On the IRF, in the specific column for the date of the event, write the words "Red Lit" or a descriptor of the event preventing the inspection.

  [b] In Part III of the IRF, state why the room is not accessible (for example, "Room not accessible due to Continuous Air Monitor (CAM) alarm" or "Room rad contaminated from glove breach").

  [c] Enter the date, time, and inspector signature in Part I of the IRF.

  [d] Process the IRF according to **5.1** steps **[5]** and **[6]**.

NOTE The Evaporator Glovebox Tank Component comprises the glovebox that houses the individual TK tanks. Only leaks from the glovebox are required to be remediated within 24 hours (including weekends), NOT the individual TK tanks.

- IF there is a spill/leak
  THEN perform the following actions:

  [a] IF it is safe to do so,
  THEN note the extent, source and/or characteristics of the spill/leak.

  [b] Contact the OC and report the abnormal condition.

  [c] Evacuate the room and post barriers to alert personnel.

  [d] Contact the TA-55 RCRA Compliance/Permit Environmental Representative as soon as possible.

8.0 DEFINITIONS AND ACRONYMS

Term	Definition
AK	acceptable knowledge
ALARA	as low as reasonably achievable
AR	action required
CAM	continuous air monitor
CF	cement fixation
CFR	Code of Federal Regulations
CSLA	criticality safety limit approval
DOE	Department of Energy
DOP	detailed operating procedure
EPA	Environmental Protection Agency
EV	evaporator
FOD	Facility Operations Director
FT	Stabilization Unit Pencil Tanks
IRF	Inspection Record Form
LANL	Los Alamos National Laboratory
NA	Not Applicable
NMED	New Mexico Environmental Department
NMHWA	New Mexico Hazardous Waste Act
OB/OD	open burn/open detonation
OC	operations center
PIC	Person In Charge
PPE	personal protective equipment
QMP	Quality Management Plan
RCRA	Resource Conservation and Recovery Act
RCT	radiological control technician
RLM	Responsible Line Manager
RWPs	radiological work permits
SOC	Securing our country
TK	EV bottoms storage tanks
TSD	treatment, storage, and disposal
UET	Use every time
WMC	waste management coordination

9.0 RESPONSIBILITIES

9.1 NPI-7/WMC

- Supplies IRF
- Receives the completed IRF and maintains IRF storage

9.2 Inspection Staff

9.2.1 Normal Operations

- NCO-2: Aqueous Nitrate Operators are the primary inspectors.
- NPI-7: Waste and Decontamination Services are the backup inspectors.

9.2.2 Friday, Weekends, and Holidays

- TA55-OPS: Operations are the primary inspectors.
- NPI-7: Waste and Decontamination Services are the backup inspectors.
- NCO-2: Aqueous Nitrate Operators are backup inspectors.

10.0 REFERENCES

Document Number	Title
20 NMAC 4	*New Mexico Hazardous Waste Act (NMHWA)*
40 CFR, Parts 260 - 273	*Code of Federal Regulations - Solid Waste*
DOE/WIPP-02-3122	*Transuranic Waste Acceptance Criteria for the Waste Isolation Pilot Plant*
EPA ID No. NM0890010515	*Los Alamos National Laboratory Hazardous Waste Facility Permit*
P101-18	*Procedure for Pause/Stop Work*
P409	*Waste Management*
PA-AP-01020	*Pre-Job Briefing and Post-Job Review*
PA-AP-01040	*Records Processing Procedure for ADPSM Organizations*
TA55-RD-539	*TA-55 Waste Management Requirements*
TA55-RD-555	*TA-55 Radiation Protection Requirements*

11.0 RECORDS

Record Identification	Record Type Determination	Protection/Storage Methods	Processing Instructions
Hazardous and Mixed Waste Facility Inspection Record Form	Written process data record	Copy and retain the completed *Hazardous and Mixed Waste Facility Inspection Record Form*. Submit the original to the WMC office.	When the records are ready for final disposition, the record is transferred to Records Management and processed as per PA-AP-01040, *Records Processing Procedure for ADPSM Organizations*.

12.0 APPENDICES AND ATTACHMENTS

Appendix	Title
1	*Permit Considerations*
2	*Item Descriptions for the Hazardous and Mixed Waste Facility Inspection Record Form*
3	*TSD Inspection Notification Call-out List*
4	*Example of Hazardous and Mixed Waste Facility Inspection Record Form*

Appendix 1, Permit Considerations

The following are pertinent excerpts from the Permit:

- **Section 1.9.14 | General Conditions**
  Requires the reporting of noncompliance with the permit; an example of a non-compliance would be failure to conduct an inspection. Your procedure could require that the TA-55 RCRA Compliance/Permit Environmental Professional be contacted.

- **Section 2.4.7 | Waste Characterization Review**
  Requires an annual revaluation of all hazardous waste streams generated to verify the accuracy of initial and subsequent characterization results. This can be an acceptable knowledge (AK) revaluation or analytical based. Since our cementation drums are managed as non-hazardous, an annual analysis of the cement is recommended.

- **Section 4.3 | Replacement Tank System and Stabilization Unit Components**
  The Permittees shall ensure that prior to replacing a portion of the tank or stabilization unit systems, a registered engineer trained and experienced in the proper installation of tank systems or components inspects the system in accordance with the requirements of 40 CFR § 264.192(b). A record of this inspection shall be maintained in the Facility Operating Record.

  If the Permittees repair the storage tank unit or the stabilization unit systems, the Permittees shall certify that the system is capable of handling mixed wastes without release for the intended life of the system in accordance with the requirements of 40 CFR § 264.196(f). This certification must be submitted to the Department within seven days after returning the tank system to use.

  Replacement tanks, their ancillary equipment, and stabilization unit ancillary equipment shall be tested for tightness prior to being placed into use § 264.192(d)). If a replacement tank, tank ancillary equipment or the stabilization unit ancillary equipment is found not to be tight, all repairs necessary to remedy the leak(s) in the system shall be performed prior to the system being placed into use.

- **Section 4.4 | Tank System and Stabilization Unit Containment**
  All leaks and associated accumulated liquids from the Evaporator Glovebox Tank and Stabilization Unit Pencil Tanks (FT) must be removed within 24 hours including weekends. The NMED must be notified within 5 days of detection.

Appendix 2, Item Descriptions for Hazardous and Mixed Waste Facility Inspection Record Form

Part I

Daily inspection of TSDs will be conducted in accordance with the inspection plan in the most recent Los Alamos National Laboratory (LANL) Hazardous Waste Facility Permit. Not all items in this section will apply to all facilities. An "NA" (not applicable) is required if the item does not apply.

1. Location information, including TA, building, room (if applicable), and any other location descriptors that may be necessary (*e.g.*, TA-59-3-114 or TA-59-1-S, Dock).
2. A site identification number is assigned to every facility by the Resource Conservation and Recovery Act (RCRA) compliance personnel. This allows for ease in identification.
3. Start date of Monday for the week of record.
4. End date of Sunday for the week of record.
5. Check the appropriate box for the type of operation. Several boxes may be checked, if necessary, for those locations where inspections are combined on a single sheet. You must have prior approval from RCRA compliance personnel to combine inspections for more than one unit.
6. These boxes are to be marked N/A. The TSD area must be inspected every day. The TSD Unit is defined as the TK tanks inside the EV salt box, the external CF FT tanks, and the CF processing equipment. As a best management practice the tanks will be inspected daily. The inspection will occur even when the tanks are not storing waste during holidays and Laboratory closures.
7. These Boxes are to be marked N/A (see 6).
8. Communication equipment must be inspected in order to ensure availability and proper operating condition for each piece of equipment (*e.g.,* telephones, radios, and alarms). Equipment must be present in accordance with the appropriate contingency plan.
9. Required signs must be legible and prominently posted in accordance with 40 CFR § 264.14(c) and/or the permit as applicable.
10. Site security must be verified. Items such as fences, gates, locks, and other access control equipment (as appropriate) should be checked for proper operating condition.
11. Roads, process floors, and other work surfaces at TSDs must be inspected for any conditions that could lead to a spill or an accident.
12. Hazardous or mixed waste TSDs must have fire control and spill control equipment. Equipment must be present, in proper operating condition, and appropriate for the material in question. Hose bibs, where present, should be inspected for proper operating condition and adequate pressure. Outdoor fire-water supply systems must be checked for freezing and damage. Equipment must be inspected and present in accordance with the appropriate inspection and contingency plans.

Appendix 2, Item Descriptions for Hazardous and Mixed Waste Facility Inspection Record Form

13. Where present, eyewashes and safety showers must be inspected to ensure proper operating condition. Outdoor locations must be checked for freezing.
14. Wind socks, where present at outside TSDs, must be inspected to ensure that they are in proper operating condition/functional and checked for damage.
15. Secondary containment structures for hazardous or mixed waste operations must be inspected to verify proper operating condition and to ensure adequate capacity. Structures must also be inspected for the presence of standing water or hazardous/mixed waste or any other indication of a spill (*i.e.* discolored vegetation, soil, or concrete). For certain operations, secondary containment includes inspection of gloves, gloveboxes, hoods, and ventilation systems. For locations where inflatable "Porta Berms" are used, inspectors must ensure that they are adequately inflated. All monitoring and leak detection systems must also be checked.
16. Loading and unloading areas must be inspected daily when in use for signs of damage or deterioration that may lead to an accident or spill. This includes asphalt covered areas and areas where containers or tanks are handled or the contents thereof are transferred.
17. Run-on and runoff controls, wherever present, must be checked. The integrity should be inspected by looking for signs of damage, erosion, ponding, or any other conditions that could lead to a spill or an accident.
18. All tanks and containers used for storing hazardous or mixed waste must have the cover or lid securely in place. Containers are not considered to be closed until the lid/cover is fastened in the manner the manufacturer originally intended. However, the lid may be off of a tank or container while waste is being placed into or removed from a container. *Note: Mark as N/A since these tanks do not have lids.
19. All containers and tanks containing hazardous or mixed waste must be labeled with the words "HAZARDOUS WASTE," and Environmental Protection Agency (EPA) Hazardous Waste Numbers or hazardous waste constituents. They must also be marked with a legible accumulation start date. All containers must be dated when they arrive at the facility and no hazardous or mixed waste may be stored for over one year, unless specifically exempted.
20. All hazardous or mixed waste containers holding materials that may be incompatible with any other materials at that location must be separated from those materials by dikes, berms, or other physical barriers to prevent a possible reaction.
21. All containers and tanks must be checked for structural integrity, leakage, corrosion, or damage that may impact integrity. This includes checking the condition of all construction materials, fixtures, seams, and auxiliary equipment. There are special inspection criteria for tank systems (see Item 24 below).

22. Adequate aisle space must be maintained to allow for inspection and for the unobstructed movement of personnel, fire protection equipment, spill control equipment, and decontamination equipment to any area of facility operation in an emergency. Containers of hazardous and mixed waste must be stored in a manner that ensures a minimum 2-foot aisle space and containers may not be stacked more than 3 high, unless otherwise specified for the facility (*i.e.* some units within the LANL Hazardous Waste Facility Permit must have an aisle space of 28 inches and only 55 gallon drums may be stored three high). Please consult RCRA compliance personnel for permit related questions.
23. Hazardous or mixed waste containers stored at TSDs must be on pallets, elevated, or otherwise raised to be protected from contact with accumulated liquid.

TANKS SYSTEMS:

24. For tank systems used for treatment or storage of hazardous or mixed waste, all aboveground portions of the tank system, including any and all ancillary plumbing, must be inspected for signs of leaking, corrosion, deterioration, or improper operation. Tanks must be operated with a minimum freeboard of 6 inches. If the tank system includes discharge controls, overtopping controls, tank level alarms, or other monitoring equipment, including leak detection equipment, all controls and relevant data must be checked to ensure they are operating properly and that operation is within design specifications for the system.

SHAFTS:

25. Shafts used for retrievable storage should have their covers securely in place and the surrounding area should show no evidence of erosion. Disposal shafts and shafts used for retrievable storage should have their covers securely in place and, during waste handling operations, guard rails must be installed and in good condition. Landfill covers must be inspected at least weekly and after storms for evidence of erosion, subsidence, and water intrusion.

OPEN BURNING UNITS:

26. Open burning units must be inspected for deterioration, leakage, vegetation in the immediate vicinity that could catch fire, and assure that the unit is covered when not in use. Inspectors must also look for explosives and debris not consumed during the burn.

OPEN DETONATION UNITS:

27. Open detonation units must be inspected for deterioration, leakage, or vegetation in the immediate vicinity that could catch fire. Inspectors must also look for explosives and debris not consumed by the detonation.

CEMENTATION UNITS:

28. The structural integrity and condition of equipment and systems must be inspected on stabilization units. Units must also be inspected for signs of leaking, corrosion, deterioration, or improper operation.

Appendix 2, Item Descriptions for Hazardous and Mixed Waste Facility Inspection Record Form

FOR ALL INSPECTIONS:

29. Record of the date of the current inspection. Only one date is given for each inspection, whether a team or an individual performs the inspection.
30. Record of the time of the current inspection. Only one time is given for each inspection, whether a team or an individual performs the inspection.
31. Legible and/or printed name of each inspector involved in the current inspection.

PART II

List any action required.

32. Document any action taken immediately and express any plans for future action to be taken. Also, ensure that previous ARs are closed out with completed actions described. If the AR has not been resolved, ensure that it is carried over to the current inspection. Status should be provided for both open and closed items. If necessary, attach additional sheets to inspection record form to efficiently cover the action taken or required. Initial any information or comments added, and if more than one action is required or conducted, assign a number to each AR.

PART III

Identify any comments.

33. Document informational comments and any status associated with the current inspection that does not require specific regulatory action or remedies.

Appendix 3, TSD Inspection Notifications

	Name	**Phone #**	**Pager #**
TA-55 Waste Management Coordinator	Egan McCormick	667-8158	664-6753
TA-55 RCRA Compliance/Permit Environmental Representative	Jeff Carmichael	665-2505	664-4220
TA-55 Operations Center	various	667-3330	
Cement Fixation Subject Matter Expert	Georgette Ayers (or current)	665-0443	664-3362
Aqueous Nitrate Processing First Line Manager	Ron Chavez (or current)	667-0220	664-3022

Appendix 4, Example of Hazardous and Mixed Waste Facility Inspection Record Form

HAZARDOUS WASTE FACILITY INSPECTION RECORD FORM

[1] FACILITY: TA55-4-401	[2] Site ID #: 481,1225	TREATMENT, STORAGE, OR DISPOSAL UNIT (TSD)	[3] START DATE:	[4] END DATE:

☐ Containers ☐ Landfill ☐ Chemical Treatment X Tank X Miscellaneous Unit (OB/OD, Cementation)

PART I- Enter condition of the item inspected (*i.e.* **OK, NA** [Not Applicable], or **AR** [Action Required]) in column for day inspected.

ITEM	INSPECTED FOR:	MON	TUE	WED	THU	FRI	SAT	SUN
[6] NO UNIT USE	No waste stored	N/A	N/A	N/A	N/A	N/A	N/A	N/A
[7] NO WASTE HANDLING	No waste handled (see instructions)	N/A	N/A	N/A	N/A	N/A	N/A	N/A
All TSDs								
[8] COMMUNICATIONS EQUIPMENT	Availability and proper operating condition							
[9] WARNING SIGNS	Posted, legible, and bilingual							
[10] SECURITY	Good condition of fences, gates, locks, and other access control equipment	SOC	SOC	SOC	SOC	SOC	SOC	SOC
[11] WORK SURFACES/ FLOORS/ROADS	Absence of conditions that could lead to an accident or spill							
[12] SPILL/FIRE EQUIPMENT	Present, appropriate, and in proper operating condition							
[13] EYEWASHES/ SAFETY SHOWERS	Proper operating condition							
[14] WIND SOCK	Proper operating condition and functional	NA	NA	NA	NA	NA	NA	NA
[15] SECONDARY CONTAINMENT	Integrity- No standing water/waste, erosion, or signs of a spill							
[16] (UN)LOADING AREA	No spills or deterioration							
[17] RUN-ON/OFF CONTROL	Integrity- no ponding, erosion, or damage	NA	NA	NA	NA	NA	NA	NA
Container Storage Units and/or Tanks (see instructions)								
[18] COVERS/LIDS OF CONTAINERS	Closed and secured properly	NA	NA	NA	NA	NA	NA	NA
[19] LABELS	Proper with start date, present & legible							
[20] COMPATIBILITY	Separated according to compatibility	NA	NA	NA	NA	NA	NA	NA
[21] INTEGRITY	No leakage, corrosion, or damage							
[22] AISLE SPACE/STACKING	Appropriateness and adequacy	NA	NA	NA	NA	NA	NA	NA

EXAMPLE

Appendix 4, Example of Hazardous and Mixed Waste Facility Inspection Record Form

FACILITY: TA55-4-401	Site ID #: 481,1225	START DATE:	END DATE:

ITEM	INSPECTED FOR:	MON	TUE	WED	THU	FRI	SAT	SUN
[23]PALLETS AND RAISED CONTAINERS	Absence of conditions that could result in failure	NA	NA	NA	NA	NA	NA	NA
[24]TANK SYSTEMS	Discharge controls and fill level and no corrosion or leakage							
Other TSDs								
[25]SHAFTS/LANDFILL COVERS	Presence and condition of cover	NA	NA	NA	NA	NA	NA	NA
[26]OPEN BURNING UNITS	Condition of cover, and no erosion, leakage, or damage	NA	NA	NA	NA	NA	NA	NA
[27]OPEN DETONATION UNITS	Unit and vegetation condition and no erosion	NA	NA	NA	NA	NA	NA	NA
[28]CEMENTATION UNITS	Structural integrity and condition of equipment and systems							
		MON	TUE	WED	THU	FRI	SAT	SUN
	[29] DATE							
	[30] TIME							
	[31] INSPECTOR(S)							

EXAMPLE

Part II- For any AR (Action Required) in PART I, describe below: action required, action taken, status, date, and time of action. Attach additional sheets if necessary. If more than one action is required, number each AR.

[32]

Part III- Comments.

[33]

WETF-WST-TP-01, Rev. A,Tritium Contaminated Waste Oil Disposal Operating Instruction

LA-UR-14-24961

Weapons Engineering Tritium Facility (WETF)

TRITIUM CONTAMINATED WASTE OIL DISPOSAL OPERATING INSTRUCTION

WETF-WST-TP-01, Rev. A

Effective Date: 01/25/06
Next Review Date: 01/25/11

Ward Rupprecht
Document Owner — Ward Rupprecht — 12/12/05 Date

Louise O'Brien
Operational Quality — Louise O'Brien — 12/13/05 Date

Rick Hemphill
Group Management — Rick Hemphill — 12-13-05 Date

Users have the ultimate responsibility to ensure that they are working with the latest revision of the controlled document

HISTORY OF REVISIONS

Revision	Revision Description	Revision Date
Rev. A	Procedure number changed to WETF-WST-TP-01 from WETF-OI-WST-07, per TSE-AP-01, *Document Control.* Revised per revision cycle. Removed section on ETCS Roots Blower and updated acronyms and references and other minor editoral changes.	08/11/05

TABLE OF CONTENTS

1.0 INTRODUCTION 1
1.1 Purpose 1
1.2 Scope 1
1.3 Applicability 1
1.4 References 1
1.5 Acronyms and Abbreviations 1
2.0 PRECAUTIONS AND LIMITATIONS 2
2.1 Precautions 2
2.2 Limitations 2
3.0 PREREQUISITES 2
3.1 Administrative Requirements 2
3.2 Training 2
3.3 Documentation Needed 2
3.4 Tools, Parts, and Equipment 3
4.0 INSTRUCTIONS 3
4.1 Preparation 3
4.2 Drum Vacuum 3
4.3 Leak Detector Pump 4
4.3 Turbo Pumps 4

1.0 INTRODUCTION

1.1 Purpose

This operating instruction (OI) is designed to ensure proper disposal of the Weapons Engineering Tritium Facility (WETF) tritium contaminated waste oil in accordance with applicable documents listed under references.

1.2 Scope

This OI covers the disposal of tritium contaminated waste oil at WETF. For questions regarding waste disposal at WETF that are beyond the scope of this procedure, contact the Waste Storage Area Contact (WSAC) or the Waste Management Coordinator (WMC).

1.3 Applicability

The WMC is responsible for ensuring that these instructions are carried out properly. The WETF Radiological Control Technician (RCT) is responsible for radiological controls during the completion of this OI.

1.4 References

LIR 404-00-02.2	*General Waste Management and Requirements*
LIR404-00-03.0	*Hazardous and Mixed Waste Requirements for Generators.*
LIR 404-00-05.1	*Managing Radioactive Waste*
PLAN-WASTEMGMT-002	*LANL Waste Management Facilities Waste Acceptance Criteria*
TSE-TP-05	*Waste Management Operating Procedure*

1.5 Acronyms and Abbreviations

DO	Duty Operator
HPAL	Health Physics Analytical Laboratory
OI	Operating Instruction
RCT	Radiological Control Technician
RWP	Radiological Work Permit
TOL	Tritium Operations Lead
TP	Technical Procedure
WETF	Weapons Engineering Tritium Facility
WMC	Waste Management Coordinator
WSAC	Waste Storage Area Contact

2.0 PRECAUTIONS AND LIMITATIONS

2.1 Precautions

Activities where personnel may be exposed to tritium contaminated oil (potential personnel hazard) are monitored and controlled by the RCT. The protective clothing required for "hands on" work in performing this OI is a labcoat with two pairs of pylox gloves (with the inner pair taped to the labcoat).

2.2 Limitations

Tritium contaminated oils < 100 Ci/m^3 may be stored in liquid form while awaiting treatment, provided that ≤ 7.5 gallons of oil is packaged in an approved 30 gallon drum or ≤ 12.5 gallons of oil in an approved 55 gallon drum filled with vermiculite or other inorganic absorbent material.

3.0 PREREQUISITES

3.1 Administrative Requirements

Verify this document is the most current revision against a control file copy and review applicable temporary conditions.

3.2 Training

WETF personnel are trained by experienced personnel and authorized by the TOL to perform tasks related to this OI, thru the guidance of the ESA-TSE training office.

3.3 Documentation Needed

A logbook is maintained for the Waste Oil Drum by personnel disposing of the oil. The log documents:

1. The amount of oil disposed of (add to previous total and record the new amount),
2. the date of disposal,
3. the LANL property number/description of the pump the/or equipment oil came from,
4. the name of the WETF person disposing of the oil, and
5. the T_2 concentration of the oil (recorded after test results of oil sample are returned from HPAL).

Contact the WMC or the DO if, after adding the oil to the drum, the total volume of oil is between 7.0 and 7.3 gallons for a 30 gallon drum or 12.0 and 12.3 gallons for a 55 gallon drum.

A Radiological Work Permit (RWP) is required to cover the operation if there is ≥ 20 μCi/m^3 tritium outgassing detected at any time.

If needed, a copy of the liquid scintillation historical counting results for pump oil at WETF is available from HSR-4.

3.4 Tools, Parts, and Equipment

Items required for this procedure include (items in *italic* may not always be required):

- Kimwipes/teri towels,
- 30 or 55 gallon waste oil drum,
- vermiculite or other inorganic absorbent material,
- household cleaner (such as Fantastic),
- *a disposable 50 cc syringe,*
- *a 20 cc plastic scintillation vial,*
- *3/16 inch I.D. tygon tubing* (≈ 8-10"),
- *an oil drainage pan,*
- protective clothing (per Section 2.1), and
- a portable tritium monitor.

4.0 INSTRUCTIONS

WETF maintains a 30 or 55 gallon drum for tritium contaminated waste oil generated at WETF. The drum is marked with the label, "Waste Oil Only" and a Radioactive Material Tag. Strips of yellow "Caution Radioactive Material" tape encircle the midsection of the container. A logbook is stored with the container to document the volume of oil stored in the drum and the level of contamination of the oil.

The following steps are taken to ensure correct waste oil storage at WETF. WETF personnel perform waste oil-generating operations per the appropriate manuals, work instructions or RWPs. The RCT is required to be available for this OI to be implemented.

4.1 Preparation

1. Place a yellow radioactive waste can near the site of the waste oil generation. Have Kimwipes/teri towels nearby to control any oil spills or drips. Fantastic is used to clean any oil drips off the floor, tools, and quick-connect fittings.
2. Ensure the pump to be drained is properly vented by disconnecting the appropriate fitting on the pump.

4.2 Drum Vacuum

After a period of time, the waste oil drum may lose its vacuum and have to be evacuated again before using it to remove oil out of pumps/equipment. Use the following steps to evacuate the drum.

1. Attach the hose to a facility nitrogen supply and to the inlet side of the "Venturi" pump.
2. Start the flow of Nitrogen ($\leq$120 psi).
3. Position portable ventilation near outlet of "Venturi" pump.
4. With an RCT or qualified operator monitoring the outlet of the "Venturi" pump, open the valve on the drum labeled "VAC" and close or check closed the valve labeled "OIL."
5. If no tritium is detected, remove ventilation and pull vacuum to $\geq$20" Hg.
6. If tritium is detected, follow RCT's instructions before continuing. If > 20μCi/m^3, a RWP is required.
7. Close the "VAC" valve.

4.3 Leak Detector Pump

Configuration of the Leak Detector Pump does not allow sampling of the oil. Change oil using 4.3, steps 1-6.

1. The Leak Detector Pump has a quick connect fitting for coupling with the drum hose. Connect the hose (it is stored on top of the waste oil drum) to the pump and the drum with the appropriate fittings.
2. Open the valve tagged "OIL" on the drum. The hose draws air through the pump into the drum when the pump is drained. The pressure gauge needle will vibrate when air is passing through to the gauge indicating the pump is drained.
3. When the pump is drained, close the valve tagged "OIL."
4. Disconnect the drum's hose from the pump taking care not to drip any oil from the hose end (wrap with a Kimwipe).
5. Carefully clean the hose connections free of oil with a Kimwipe. Contain the drum hose fittings in plastic to prevent tritium contaminated oil from spreading to uncontaminated surfaces.
6. WETF personnel conclude the maintenance per the appropriate manual(s).

4.3 Turbo Pumps

Note

There is not enough oil in the smaller (e.g., models 050 and 060) turbo pumps (i.e. oil-soaked felt gasket/washer) to provide a sample. This section applies to larger (i.e. Model 1600) turbo pumps only.

1. With the RCT monitoring for tritium, remove oil plug on the pump.
2. The RCT immediately samples the port with the portable tritium monitor. If there is < 20 $\mu Ci/m^3$ tritium outgassing from the port, proceed. Otherwise, tightly close the port and prepare an RWP covering the operation.
3. Using a disposable syringe, withdraw a 10 cc oil sample for analysis by the RCT. Place the sample in a 20 cc liquid scintillation vial.
4. Syringe the remaining oil into a suitable container (e.g. plastic tray). (Dispose of the syringe per the RCT.)
5. Disposition the oil from the container/sample (when returned) into the drum by attaching the quick-connect copper tubing apparatus (located on top of the drum) to the hose and siphoning the oil. Record sample analysis results in the waste oil logbook.
6. WETF personnel conclude the maintenance per the appropriate manual(s).

W-7-TP-0053U, Rev A, Absorption of Liquid Waste with Low-Level Tritium

LA-UR-14-24963

☐ Record Copy

ABSORPTION OF LIQUID WASTE WITH LOW-LEVEL TRITIUM

W-7-TP-0053U, REVISION A

Effective Date: 5/22/2014
Expiration Date: 5/22/2015

Moderate Hazard:

☐ w/controls in TP number (s) _____
☒ w/controls in this TP

Format: ☒ Reference ☐ UET
Status: ☒ New ☐ Major Revision ☐ Minor revision ☐ Reviewed, no change

Approvals

Name	Organization	Date
Drew Geller **Person-in-Charge/Technical Contact**	W-7	5/22/2014
Larry Najera **Responsible Line Manger**	W-7	4/28/2014
Dale Talbott **Responsible Line Manger**	W-SPO	5/02/2014
Janice Salazar **Industrial Hygienist**	DSESH-WFO	5/15/2014
Terry Vergamini **Radiation Protection**	DSESH-WFO	5/07/2014
Al Stadelmaier **Waste Management**	DSESH-WFO	5/21/2014
Mark Fitzgerald **FOD Representative**	WFO-WF	5/01/2014

Execution Date: _____ PIC Signature: _____

This document is deemed **UNCLASSIFIED** by Lorenzo Najera, R&D Manager, W-7

Reviewers

Name	Organization
Angela Renneke	W-SPO
Kris Law	DSESH-WFO

REVISION LOG

Document Number	Revision	Description of Change
W-7-TP-0053U	A	Initial Release

TABLE OF CONTENTS

1.0 INTRODUCTION 5
1.1 Purpose 5
1.2 Scope 5
2.0 PRECAUTIONS AND LIMITATIONS 5
2.1 Hazards and Controls 5
2.2 Precautions 6
2.3 Limitations 7
2.4 Emergency Actions 7
2.5 Referenced Procedures 7
3.0 PREREQUISITE ACTIONS 7
3.1 Scheduling and Coordination 7
3.2 Required Training 7
3.3 Performance Documents 7
3.4 Instruments, Components, and Supplies Information 7
4.0 PERFORMANCE STEPS 8
5.0 RECORDS 9
6.0 APPENDICES 9
7.0 DEFINITIONS AND ACRONYMS 10
7.1 Definitions 10
7.2 Acronyms 10
8.0 REFERENCES 10
APPENDIX A: IWD PART 2, FOD REQUIREMENTS AND APPROVAL 11
APPENDIX B: IWD PART 4, POST-JOB REVIEW 12

1.0 INTRODUCTION

1.1 Purpose

Liquid waste with low-level tritium content was generated by several processes in Technical Area (TA)-16-202-107, when it was a tritium radiological lab. The waste is composed of water, ethylene glycol, and Ultima Gold scintillation cocktail, with trace amounts of tritium. The tritium content has been assessed by Environment, Safety, Health Deployed Services, Weapons Facilities Operations (DSESH-WFO) through scintillation counting and constitutes a total of less than 1 mCi in the approximately 5 gallons of waste.

One path for disposal of this waste requires absorbing the liquid on a porous granular absorbent material. The absorbent material must be packaged such that there is no remaining free liquid after absorption. This reference technical procedure (TP) outlines the safe handling of liquid radiological waste for the process of absorbing the liquid waste in the Limited Area TA-16-202-107 at Los Alamos National Laboratory (LANL), through enumeration of the work hazards and controls.

1.2 Scope

This technical procedure applies to absorption of liquid radiological waste located in a Radiological Controlled Area (RCA) inside of TA-16-202-107, which is designated as a Limited Area. The waste contains potential tritium contamination but is otherwise nonhazardous. The use of this TP is limited to TA-16-202-107, but it could easily be reevaluated and adapted for use at other facilities.

2.0 PRECAUTIONS AND LIMITATIONS

2.1 Hazards and Controls

Hazards	Controls
Uncleared Visitor in a Limited Area	• Visitor is escorted by a Q-cleared, escort-trained LANL employee • Visitor signs Visitor Log upon entry to TA-16-202-107 • Coordinate visit with W-SPO and any other tenants of this room • Post sign “Uncleared Visitor” on entrance to room • Verbally inform workers present or entering that visitor is Uncleared

Hazards	Controls
Control of Classified Matter	• There is no classified matter involved in this procedure • Classified matter from collocated activities shall be covered or removed by personnel owning those activities
Spread of Tritium Contamination	• Read and observe all radiological postings • Follow facility radiation protection requirements (FRPR) or radiation work permit (RWP) • Wear personal protective equipment (PPE) as specified in FRPR, RWP, area radiological postings, or as directed by a radiological control technician (RCT) • Dispose of potentially tritium-contaminated gloves and compactable waste in yellow radioactive waste cans
Splash hazard to eyes	• Wear goggles for eye protection
Skin contact hazard through splashing or dripping of tritium-contaminated liquid	• Wear PPE as specified in RWP
Lifting for heavy objects	• Wear steel-toe shoes
Lifting or moving objects with sharp edges	• Wear leather or synthetic work gloves
Hand Tools	• Skill of craft
Inhalation of particulates	• The vermiculite is selected is coarse-grade, and the room volume is large is well-ventilated. An IH SME has determined this operation to be low hazard.
Unexpected Hazards are observed	• If an unexpected hazard is observed, stop work and consult appropriate subject matter expert (SME) or industrial hygienist (IH) professional.

2.2 Precautions

Ensure that room tritium monitor is operating, has air flow, is in calibration, and has been performance tested by an RCT.

2.3 Limitations

See *Integrated Work Document (IWD) Part 2, FOD Requirements and Approval for Entry and Area Hazards and Controls* (Form 2102, Appendix A).

2.4 Emergency Actions

Workers follow instructions of RCT present during work. If additional RCT support is needed, workers contact RCT and the Weapons Facility Operations (WFO) Duty Officer at 664-2926 using nearby phone [e.g., outside the 202 Closed Area (CA)]. See HPO-FRPR-WFO, Sec. 9.1.3.

2.5 Referenced Procedures

None

3.0 PREREQUISITE ACTIONS

3.1 Scheduling and Coordination

This activity requires the presence of an RCT, to be arranged by the person-in-charge (PIC). The PIC will also arrange a time for the work to be done with Weapon System Engineering Division Surety Program Office (W-SPO), the primary tenant of this laboratory space. The PIC will notify W-SPO when the work is complete. The absorbed waste must be visually inspected before packaging by a waste packaging certifier (WPC) from Waste Management Services (WM-SVS). The PIC will coordinate with the waste management coordinator (WMC) to arrange for this inspection or observation of the absorption activity, as applicable.

3.2 Required Training

For LANL workers:

- *Rad Worker II*, Training Plan #115
- *Tritium Safety*, Course #11952
- *16-202-107 Access Training*, Curriculum #6469

3.3 Performance Documents

None

3.4 Instruments, Components, and Supplies Information

3.4.1 Measurement and Test Equipment

None

3.4.2 Tools, Fixtures, and Gauges

- open-end wrenches, various sizes as needed
- adjustable wrenches
- screwdrivers, various as needed

- pliers

3.4.3 Special Tools, Equipment, or Components

Plastic container or beaker of known volume (< 1 gallon) for measuring out absorbent and waste liquid (e.g., 1-2 liter graduated cylinder)

3.4.4 Supplies

- DOT-certified drum
- Large, clear plastic bags (as used in compactable waste containers), as needed
- Clear plastic waste drums, as needed
- Vermiculite or other absorbent material, as needed
- Plastic sheet, to cover clean surfaces

3.4.5 Test Equipment or Facilities Description

None

4.0 PERFORMANCE STEPS

Note:

The waste liquid has already been sampled for tritium before commencing this procedure.

The liquid will be absorbed on vermiculite absorbent in the ratio 1:5 by volume. If the vermiculite does not absorb all free liquid, the ratio will be increased until no free liquid remains in the waste container.

Step 4.1 **DISPENSE** equal volumes of particulate absorbent (25 gallons, total) into each waste container or bag.

Step 4.2 **PLACE** plastic sheet on floor, for placement of plastic measuring container.

Step 4.3 **OPEN** 5-gallon waste container.

Step 4.4 **IF** absorbed material is to be disposed in bags, place one partially filled bag in drum for support and containment of potential leaks from bag.

Step 4.5 **IF** using a plastic waste container for the absorbed waste, **PLACE** it on a plastic sheet at this time.

Step 4.6 **FILL** measuring container to mark, measuring out a known quantity of waste liquid. Slowly **POUR** waste liquid from measuring container into dispensed vermiculite, allowing liquid to saturate the absorbent material. **REPEAT** this step until the volume of liquid dispensed into the vermiculite is approximately 1/5 the volume of vermiculite measured in Step 4.1.

Step 4.7 **WIPE** off plastic measuring container, disposing of towel in bag. **PLACE** plastic measuring container on plastic sheet on floor.

Step 4.8 **IF** required by the WPC, **INSPECT** vermiculite for free liquid, lifting the bag or container if necessary. Also **INSPECT** exterior of container for free liquid, indicating a leak.

Step 4.9 **IF** free liquid is visible inside bag or container, **PLACE** bag back in drum or waste container on plastic sheet. **LIFT** alternate sides of bag or container to rearrange particulate material. **WAIT** several minutes for liquid to be absorbed.

Step 4.10 **IF** free liquid is still visible **AND** there is still free space in the container or bag, then **ADD** more vermiculite to the container or bag. **IF** free liquid is still visible **BUT** the container is mostly full, then **GET** a second bag or container and **TRANSFER** some of the contaminated vermiculite to the new container. **ADD** an equal portion of fresh vermiculite to refill the old container. **GO TO** Step 4.8.

Step 4.11 **CLOSE** bag(s) or container and tape as applicable.

Step 4.12 **IF** more bags or containers are to be filled, **GO TO** Step 4.4.

Step 4.13 **DISPOSE** of rags, gloves, and disposable PPE in compactable radiological trash.

Step 4.14 **REQUEST** RCT to perform release survey for tritium contamination on bags or containers.

5.0 RECORDS

Electronic copies of finalized documents will be stored in PDMLink. In accordance with P 1020-1, *Laboratory Records Management*; PD 1020, *Document Control and Records Management*; and W-AD-0055, *W Division Records Management Plan*, the Document Configuration Management (DCM) Team will maintain official records. The PIC or designee must either hand-carry or scan and email records to the DCM Team at dcmrequest@lanl.gov.

6.0 APPENDICES

Appendix A: *IWD Part 2, FOD Requirements and Approval for Entry and Area Hazards and Controls*, Form 2102
Appendix B: *IWD Part 4, Feedback/Post Job Reviews*

7.0 DEFINITIONS AND ACRONYMS

7.1 Definitions

Waste management coordinator (WMC)	The individual responsible for coordinating waste management activities on behalf of waste generators, line managers, facility managers, field project leaders, waste management groups, and other Laboratory organizations. This individual also coordinates resolution of waste management issues on behalf of his/her waste-generating organization and reviews documents pertaining to the management of waste.

7.2 Acronyms

DCM	Document Configuration Management
FRPR	Facility Radiation Protection Requirements
IH	Industrial Hygiene
IWD	Integrated Work Document
PIC	Person-in-Charge
PPE	Personal Protective Equipment
RCA	Radiological Controlled Area
RCT	Radiological Control Technician
RWP	Radiological Work Permit
SME	Subject Matter Expert
TP	Technical Procedure
WFO	Weapons Facility Operations
WMC	Waste Management Coordinator
WPC	Waste Packaging Certifier

8.0 REFERENCES

HPO-FRPR-WFO, *Facility Radiation Protection Requirements Weapons Facilities Operations*

WFO-TRN-0004, *TA-16-202-107 Laboratory Space Access Training Study Guide*

APPENDIX A: IWD PART 2, FOD REQUIREMENTS AND APPROVAL

IWD#:	**FOD Requirements and Approval for Entry and Area Hazards and Controls**	**Tenant Activity Form**
Title:		

FOD must determine the facility entry and coordination requirements and identify the ESH/S&S hazards and controls associated with the activity location.

FOD	TA	Bldg.	Room	Other Location
FOD Designated Facility Point-of-Contact	Name	Phone	Pager	Email

Entry and Coordination Requirements (Check one or more of the following):

☐ No Entry/Coordination Requirements
☐ FOD designated facility point-of-contact must sign IWD Part 3
☐ POTD/POTW ☐ Check in at Start of Work ☐ Work-Area Training Required
☐ Security Clearance Requirements ☐ Work must be Scheduled ☐ Check in Daily
☐ Escort Required ☐ Other Security Requirements ☐ Co-located Hazards/Concerns
☐ Check out at End of Work ☐ Quality Issues ☐ Review under AB/Safety Basis/USQ
☐ Other Bounding Conditions _____

Instructions: In the block below, provide facility or work-area information needed by the workers on this activity. (Things to consider include specific work-area hazards and controls, potential conflicts with co-located activities, or any facility restrictions on the activity.) Identify relevant reference documents and any training required.

Facility/Work-Area Information Relevant to this Activity
Reference Documents:
Training Requirements:

FOD Approval
I have verified that the hazards identified above adequately identify the area hazards and that the IWM process has been applied appropriately. **FOD or Representative** (Signature/Z #/Date) **Approval Required** _____ Date Approval Expires:

Form 2102

APPENDIX B: IWD PART 4, POST-JOB REVIEW

A post-job review with the workers and PIC should include the following:

- Verify that the activity is complete and make notifications in accordance with FOD requirements;
- Ensure that follow-through actions (*e.g., clean-up, recycle, waste disposal, equipment removal, and secure storage*) are completed;
- Identify inefficiencies, problems during the activity, coordination issues, unanticipated conditions, and near misses; and
- Develop recommendations for improvement.

Lessons learned; safety, security, and environmental issues; coordination issues; and unexpected conditions.
Suggested improvements to enter into the JHA Tool, FootPrints, or other integrated work control data bases supported by Lessons Learned.
Other recommendations for improvements to performing this activity. State the positive attributes of this activity.

Completion Statement

By signing below, I have verified that the activity scope, final worksite ESH&Q/S&S restoration, and cleanup are complete, and I have ensured proper notifications and turnover in accordance with FOD requirements.
PIC (Signature/Z #/Date) **Required:**

Form 2104

ENCLOSURE 2

Post 1979 LANL Locations Generating Hazardous, Mixed, and Non-Hazardous TRU or Low-Level Waste

WM-DO-14-048

LA-UR-14-24906

Date: JUL 03 2014

Response to the NMED information request concerning a list of all LANL locations where hazardous waste, mixed waste, and non-hazardous TRU or low level radioactive waste is generated. This list includes sites recorded in WCATS generating waste as of 01-OCT-1979 through the date the query was run (26-JUN-2014.) The information is broken down into columns as follows:
TA = Technical Area
BLDG = Building within the Technical Area
Waste Type = Haz (ardous), MLLW (Mixed Low Level Waste), TRU (Transuranic) and MTRU (Mixed Transuranic.)
First Fiscal Year Generated = Earliest Fiscal Year Generated
Last Fiscal Year Generated = Latest Fiscal Year Generated

TA	BLDG	Waste Type	First Fiscal Year Generated	Last Fiscal Year Generated
00	1	HAZ	2005	2005
00	1	HAZ	2004	2004
00	1	HAZ	2004	2008
00	1	HAZ	2004	2004
00	1	HAZ	2004	2004
00	1	HAZ	1991	1991
00	1	HAZ	2004	2004
00	100	HAZ	1991	1991
00	107	HAZ	2008	2008
00	116	HAZ	1995	1995
00	1197	HAZ	2001	2003
00	1237	HAZ	1987	2011
00	1237	HAZ	1993	2009
00	1237	HAZ	2000	2012
00	1237	HAZ	2000	2000
00	1308	HAZ	2001	2001
00	1308	HAZ	2001	2002
00	1308	HAZ	2011	2012
00	1309	HAZ	2003	2003
00	1331	HAZ	1999	1999
00	1355	HAZ	1999	1999
00	150	HAZ	1997	1997
00	16	HAZ	1996	1997
00	1698	HAZ	2008	2008
00	1698	HAZ	2008	2008
00	1698	HAZ	2008	2008
00	199	HAZ	2003	2003
00	199	HAZ	1996	1996
00	199	HAZ	1993	1993
00	2	HAZ	2004	2004
00	2009	HAZ	2008	2008

Response to the NMED information request concerning a list of all LANL locations where hazardous waste, mixed waste, and non-hazardous TRU or low level radioactive waste is generated. This list includes sites recorded in WCATS generating waste as of 01-OCT-1979 through the date the query was run (26-JUN-2014.) The information is broken down into columns as follows:
TA = Technical Area
BLDG = Building within the Technical Area
Waste Type = Haz (ardous), MLLW (Mixed Low Level Waste), TRU (Transuranic) and MTRU (Mixed Transuranic.)
First Fiscal Year Generated = Earliest Fiscal Year Generated
Last Fiscal Year Generated = Latest Fiscal Year Generated

TA	BLDG	Waste Type	First Fiscal Year Generated	Last Fiscal Year Generated
00	21	HAZ	2008	2008
00	21	HAZ	2008	2008
00	21	HAZ	2008	2008
00	21	HAZ	2008	2008
00	29	HAZ	2004	2004
00	29	HAZ	2008	2008
00	3	HAZ	1998	2001
00	3	HAZ	2007	2008
00	3	HAZ	2004	2008
00	31	HAZ	2008	2008
00	31	HAZ	1998	1998
00	32	HAZ	2008	2008
00	32	HAZ	1996	1996
00	38	HAZ	2002	2003
00	39	HAZ	1995	1996
00	40	HAZ	2008	2008
00	40	HAZ	2008	2008
00	40	HAZ	2006	2006
00	40	HAZ	1994	1994
00	409	HAZ	2008	2008
00	410	HAZ	1994	1995
00	44	HAZ	2008	2008
00	455	HAZ	2006	2006
00	46	HAZ	1998	1998
00	480	HAZ	1991	1992
00	480	HAZ	1992	1992
00	534	HAZ	2007	2007
00	622	HAZ	1997	1997
00	66	HAZ	2008	2008
00	758	HAZ	2009	2009
00	76	HAZ	2008	2008
00	770	HAZ	2009	2009

Response to the NMED information request concerning a list of all LANL locations where hazardous waste, mixed waste, and non-hazardous TRU or low level radioactive waste is generated. This list includes sites recorded in WCATS generating waste as of 01-OCT-1979 through the date the query was run (26-JUN-2014.) The information is broken down into columns as follows:
TA = Technical Area
BLDG = Building within the Technical Area
Waste Type = Haz (ardous), MLLW (Mixed Low Level Waste), TRU (Transuranic) and MTRU (Mixed Transuranic.)
First Fiscal Year Generated = Earliest Fiscal Year Generated
Last Fiscal Year Generated = Latest Fiscal Year Generated

TA	BLDG	Waste Type	First Fiscal Year Generated	Last Fiscal Year Generated
00	85	HAZ	2004	2006
00	85	HAZ	2008	2008
00	85	HAZ	2004	2004
00	85	HAZ	2004	2004
00	85	HAZ	2004	2004
00	86	HAZ	2003	2003
00	87	HAZ	2004	2004
00	87	HAZ	2004	2004
00	91	HAZ	2008	2008
00	GEN-AREAS	HAZ	1992	1992
00	GEN-AREAS	HAZ	2004	2004
00	GEN-AREAS	HAZ	1985	2009
00	GEN-AREAS	HAZ	2008	2014
00	GEN-AREAS	HAZ	2001	2007
01	1003	HAZ	1995	1995
01	207	HAZ	1995	1995
02	1	HAZ	1998	2003
02	1	HAZ	1995	1996
02	1	HAZ	1993	1993
02	1	HAZ	1995	1995
02	1	HAZ	1997	1997
02	1	HAZ	2003	2003
02	1	HAZ	2000	2000
02	210	HAZ	2004	2004
02	210	HAZ	2004	2006
02	3	HAZ	2003	2003
02	86	HAZ	2003	2003
02	GEN-AREAS	HAZ	1986	2000
02	GEN-AREAS	HAZ	2003	2003
03	1	HAZ	2004	2004
03	1	HAZ	2003	2003
03	1	HAZ	2003	2005

Response to the NMED information request concerning a list of all LANL locations where hazardous waste, mixed waste, and non-hazardous TRU or low level radioactive waste is generated. This list includes sites recorded in WCATS generating waste as of 01-OCT-1979 through the date the query was run (26-JUN-2014.) The information is broken down into columns as follows:
TA = Technical Area
BLDG = Building within the Technical Area
Waste Type = Haz (ardous), MLLW (Mixed Low Level Waste), TRU (Transuranic) and MTRU (Mixed Transuranic.)
First Fiscal Year Generated = Earliest Fiscal Year Generated
Last Fiscal Year Generated = Latest Fiscal Year Generated

TA	BLDG	Waste Type	First Fiscal Year Generated	Last Fiscal Year Generated
03	1	HAZ	2003	2003
03	1	HAZ	1994	2004
03	1	HAZ	2003	2003
03	1	HAZ	2003	2003
03	1	HAZ	2001	2004
03	1	HAZ	2003	2003
03	1	HAZ	2002	2002
03	1	HAZ	2003	2003
03	1	HAZ	2003	2003
03	1	HAZ	2002	2003
03	1	HAZ	2003	2003
03	1	HAZ	2002	2002
03	1	HAZ	2003	2003
03	1	HAZ	1992	1998
03	1003	HAZ	1996	1996
03	102	HAZ	1991	1992
03	102	HAZ	1983	1993
03	102	HAZ	1993	1995
03	102	HAZ	2002	2002
03	102	HAZ	1993	1993
03	102	HAZ	1996	1996
03	105	HAZ	1991	1991
03	105	HAZ	2001	2001
03	105	HAZ	1998	1998
03	105	HAZ	1998	1999
03	107	HAZ	1998	1998
03	107	HAZ	2002	2003
03	1085	HAZ	2003	2003
03	11	HAZ	2005	2005
03	111	HAZ	2003	2003
03	123	HAZ	1986	1986
03	1233	HAZ	1999	1999

Response to the NMED information request concerning a list of all LANL locations where hazardous waste, mixed waste, and non-hazardous TRU or low level radioactive waste is generated. This list includes sites recorded in WCATS generating waste as of 01-OCT-1979 through the date the query was run (26-JUN-2014.) The information is broken down into columns as follows:
TA = Technical Area
BLDG = Building within the Technical Area
Waste Type = Haz (ardous), MLLW (Mixed Low Level Waste), TRU (Transuranic) and MTRU (Mixed Transuranic.)
First Fiscal Year Generated = Earliest Fiscal Year Generated
Last Fiscal Year Generated = Latest Fiscal Year Generated

TA	BLDG	Waste Type	First Fiscal Year Generated	Last Fiscal Year Generated
03	1237	HAZ	1996	2000
03	124	HAZ	2008	2008
03	124	HAZ	2002	2008
03	124	HAZ	2003	2003
03	1269	HAZ	2012	2012
03	128	HAZ	1996	1996
03	130	HAZ	1990	2014
03	130	HAZ	2005	2008
03	130	HAZ	2010	2010
03	132	HAZ	1990	1997
03	132	HAZ	2000	2000
03	132	HAZ	1994	1994
03	132	HAZ	1996	1996
03	132	HAZ	1991	1991
03	132	HAZ	1992	2000
03	132	HAZ	1993	1999
03	132	HAZ	1992	1995
03	132	HAZ	1992	1992
03	132	HAZ	1992	1998
03	132	HAZ	1995	1995
03	132	HAZ	1996	2000
03	132	HAZ	1997	1997
03	132	HAZ	1992	1995
03	132	HAZ	1994	1997
03	132	HAZ	1998	1998
03	1321	HAZ	1992	1992
03	1353	HAZ	1991	1992
03	1398	HAZ	2010	2011
03	1398	HAZ	2010	2011
03	1398	HAZ	2011	2011
03	1398	HAZ	2010	2014
03	1398	HAZ	2010	2011

Response to the NMED information request concerning a list of all LANL locations where hazardous waste, mixed waste, and non-hazardous TRU or low level radioactive waste is generated. This list includes sites recorded in WCATS generating waste as of 01-OCT-1979 through the date the query was run (26-JUN-2014.) The information is broken down into columns as follows:
TA = Technical Area
BLDG = Building within the Technical Area
Waste Type = Haz (ardous), MLLW (Mixed Low Level Waste), TRU (Transuranic) and MTRU (Mixed Transuranic.)
First Fiscal Year Generated = Earliest Fiscal Year Generated
Last Fiscal Year Generated = Latest Fiscal Year Generated

TA	BLDG	Waste Type	First Fiscal Year Generated	Last Fiscal Year Generated
03	141	HAZ	1986	1995
03	141	HAZ	1996	1996
03	141	HAZ	1997	1997
03	141	HAZ	2000	2010
03	141	HAZ	1992	1993
03	141	HAZ	1996	2013
03	141	HAZ	1992	2004
03	141	HAZ	1992	1992
03	141	HAZ	1996	1996
03	141	HAZ	1995	1996
03	141	HAZ	2001	2001
03	141	HAZ	1995	1995
03	141	HAZ	2010	2010
03	1411	HAZ	2003	2004
03	1411	HAZ	2013	2014
03	142	HAZ	1991	2004
03	142	HAZ	2004	2004
03	1420	HAZ	2012	2012
03	1420	HAZ	2010	2010
03	1420	HAZ	2007	2014
03	1420	HAZ	2008	2014
03	1420	HAZ	2007	2014
03	1420	HAZ	2009	2014
03	1498	HAZ	1998	2000
03	1527	HAZ	1991	1991
03	154	HAZ	2002	2002
03	154	HAZ	2010	2010
03	1572	HAZ	1995	1995
03	16	HAZ	1987	2010
03	16	HAZ	2010	2010
03	16	HAZ	1992	1996
03	16	HAZ	1992	1992

Response to the NMED information request concerning a list of all LANL locations where hazardous waste, mixed waste, and non-hazardous TRU or low level radioactive waste is generated. This list includes sites recorded in WCATS generating waste as of 01-OCT-1979 through the date the query was run (26-JUN-2014.) The information is broken down into columns as follows:
TA = Technical Area
BLDG = Building within the Technical Area
Waste Type = Haz (ardous), MLLW (Mixed Low Level Waste), TRU (Transuranic) and MTRU (Mixed Transuranic.)
First Fiscal Year Generated = Earliest Fiscal Year Generated
Last Fiscal Year Generated = Latest Fiscal Year Generated

TA	BLDG	Waste Type	First Fiscal Year Generated	Last Fiscal Year Generated
03	16	HAZ	2006	2007
03	16	HAZ	1998	2003
03	16	HAZ	2003	2003
03	16	HAZ	1991	1991
03	163	HAZ	2000	2000
03	164	HAZ	1991	1991
03	1663	HAZ	1999	1999
03	169	HAZ	2001	2001
03	169	HAZ	2001	2001
03	1698	HAZ	1999	2000
03	1698	HAZ	1996	2001
03	1698	HAZ	1997	2001
03	1698	HAZ	1997	1998
03	1698	HAZ	2000	2010
03	1698	HAZ	1997	1997
03	1698	HAZ	2008	2008
03	1698	HAZ	1996	1996
03	1698	HAZ	1996	1997
03	1698	HAZ	1996	1997
03	1698	HAZ	2010	2011
03	1698	HAZ	1997	2014
03	1698	HAZ	1995	2000
03	1698	HAZ	2000	2012
03	1698	HAZ	2011	2011
03	1698	HAZ	2001	2001
03	1698	HAZ	1997	2013
03	1698	HAZ	1998	2004
03	1698	HAZ	2001	2010
03	1698	HAZ	2001	2014
03	1698	HAZ	2001	2001
03	1698	HAZ	1997	1997
03	1698	HAZ	1997	2013

Response to the NMED information request concerning a list of all LANL locations where hazardous waste, mixed waste, and non-hazardous TRU or low level radioactive waste is generated. This list includes sites recorded in WCATS generating waste as of 01-OCT-1979 through the date the query was run (26-JUN-2014.) The information is broken down into columns as follows:
TA = Technical Area
BLDG = Building within the Technical Area
Waste Type = Haz (ardous), MLLW (Mixed Low Level Waste), TRU (Transuranic) and MTRU (Mixed Transuranic.)
First Fiscal Year Generated = Earliest Fiscal Year Generated
Last Fiscal Year Generated = Latest Fiscal Year Generated

TA	BLDG	Waste Type	First Fiscal Year Generated	Last Fiscal Year Generated
03	1698	HAZ	2000	2010
03	1698	HAZ	1997	2011
03	1698	HAZ	1997	2008
03	1698	HAZ	1995	2010
03	1698	HAZ	1997	2014
03	1698	HAZ	1996	2010
03	1698	HAZ	1997	2008
03	1698	HAZ	2003	2003
03	1698	HAZ	2003	2005
03	1698	HAZ	2009	2014
03	170	HAZ	1984	1994
03	170	HAZ	2006	2006
03	1746	HAZ	1991	1991
03	1790	HAZ	2002	2002
03	18	HAZ	2004	2004
03	1819	HAZ	1991	1996
03	1819	HAZ	1995	2010
03	1819	HAZ	1992	2010
03	1819	HAZ	1992	2009
03	1819	HAZ	1993	2012
03	1819	HAZ	1993	2013
03	1819	HAZ	2010	2010
03	1819	HAZ	2002	2014
03	189	HAZ	2003	2003
03	2	HAZ	1991	1992
03	2	HAZ	2002	2003
03	2	HAZ	2003	2003
03	2	HAZ	2003	2003
03	20	HAZ	2001	2001
03	200	HAZ	1989	1992
03	2002	HAZ	2005	2005
03	2008	HAZ	1992	1993

Response to the NMED information request concerning a list of all LANL locations where hazardous waste, mixed waste, and non-hazardous TRU or low level radioactive waste is generated. This list includes sites recorded in WCATS generating waste as of 01-OCT-1979 through the date the query was run (26-JUN-2014.) The information is broken down into columns as follows:
TA = Technical Area
BLDG = Building within the Technical Area
Waste Type = Haz (ardous), MLLW (Mixed Low Level Waste), TRU (Transuranic) and MTRU (Mixed Transuranic.)
First Fiscal Year Generated = Earliest Fiscal Year Generated
Last Fiscal Year Generated = Latest Fiscal Year Generated

TA	BLDG	Waste Type	First Fiscal Year Generated	Last Fiscal Year Generated
03	2009	HAZ	1995	2014
03	2009	HAZ	1994	2014
03	2009	HAZ	1996	1996
03	2009	HAZ	2010	2010
03	2018	HAZ	1991	1991
03	2018	HAZ	2000	2000
03	2018	HAZ	2010	2010
03	2056	HAZ	1999	1999
03	2058	HAZ	1998	1999
03	207	HAZ	1991	1992
03	207	HAZ	2000	2000
03	208	HAZ	2006	2006
03	209	HAZ	2004	2004
03	21	HAZ	2005	2005
03	21	HAZ	2004	2005
03	21	HAZ	2004	2004
03	21	HAZ	2004	2004
03	21	HAZ	2004	2005
03	21	HAZ	2004	2004
03	21	HAZ	2005	2005
03	213	HAZ	2003	2003
03	213	HAZ	2003	2005
03	213	HAZ	2004	2005
03	213	HAZ	2004	2004
03	213	HAZ	2005	2005
03	213	HAZ	2003	2005
03	213	HAZ	2003	2003
03	213	HAZ	2002	2002
03	213	HAZ	2003	2005
03	213	HAZ	2004	2005
03	2132	HAZ	1996	2002
03	2133	HAZ	1991	1996

Response to the NMED information request concerning a list of all LANL locations where hazardous waste, mixed waste, and non-hazardous TRU or low level radioactive waste is generated. This list includes sites recorded in WCATS generating waste as of 01-OCT-1979 through the date the query was run (26-JUN-2014.) The information is broken down into columns as follows:
TA = Technical Area
BLDG = Building within the Technical Area
Waste Type = Haz (ardous), MLLW (Mixed Low Level Waste), TRU (Transuranic) and MTRU (Mixed Transuranic.)
First Fiscal Year Generated = Earliest Fiscal Year Generated
Last Fiscal Year Generated = Latest Fiscal Year Generated

TA	BLDG	Waste Type	First Fiscal Year Generated	Last Fiscal Year Generated
03	215	HAZ	1984	1999
03	215	HAZ	1999	1999
03	215	HAZ	1992	1995
03	215	HAZ	1993	1998
03	216	HAZ	1983	2000
03	216	HAZ	1996	2008
03	216	HAZ	2003	2003
03	216	HAZ	1992	1992
03	216	HAZ	1992	1992
03	216	HAZ	1993	2000
03	218	HAZ	1982	2000
03	218	HAZ	1991	1992
03	218	HAZ	1999	1999
03	22	HAZ	1987	2008
03	22	HAZ	1992	1992
03	22	HAZ	1991	1992
03	22	HAZ	2004	2004
03	22	HAZ	1997	1998
03	22	HAZ	1992	1992
03	22	HAZ	1992	1992
03	22	HAZ	2001	2001
03	22	HAZ	2004	2004
03	22	HAZ	2012	2012
03	2206	HAZ	2002	2002
03	223	HAZ	1989	2006
03	223	HAZ	2004	2006
03	223	HAZ	2009	2011
03	223	HAZ	1993	1993
03	223	HAZ	1992	1993
03	2236	HAZ	1995	2001
03	2237	HAZ	1995	1996
03	228	HAZ	2002	2002

Response to the NMED information request concerning a list of all LANL locations where hazardous waste, mixed waste, and non-hazardous TRU or low level radioactive waste is generated. This list includes sites recorded in WCATS generating waste as of 01-OCT-1979 through the date the query was run (26-JUN-2014.) The information is broken down into columns as follows:
TA = Technical Area
BLDG = Building within the Technical Area
Waste Type = Haz (ardous), MLLW (Mixed Low Level Waste), TRU (Transuranic) and MTRU (Mixed Transuranic.)
First Fiscal Year Generated = Earliest Fiscal Year Generated
Last Fiscal Year Generated = Latest Fiscal Year Generated

TA	BLDG	Waste Type	First Fiscal Year Generated	Last Fiscal Year Generated
03	23	HAZ	2005	2005
03	2322	HAZ	2004	2004
03	2322	HAZ	2007	2007
03	2322	HAZ	2008	2011
03	2322	HAZ	2011	2011
03	24	HAZ	2008	2008
03	24	HAZ	2000	2000
03	25	HAZ	2004	2004
03	253	HAZ	1987	1987
03	253	HAZ	2000	2004
03	253	HAZ	2009	2009
03	26	HAZ	2004	2005
03	26	HAZ	2004	2004
03	260	HAZ	2004	2004
03	261	HAZ	1991	1992
03	261	HAZ	2002	2002
03	261	HAZ	2009	2013
03	271	HAZ	1987	2003
03	271	HAZ	1998	1998
03	271	HAZ	1992	2005
03	271	HAZ	1994	1994
03	28	HAZ	1993	1994
03	28	HAZ	1991	1991
03	28	HAZ	1991	1992
03	287	HAZ	1991	1992
03	287	HAZ	2003	2003
03	287	HAZ	2000	2003
03	287	HAZ	1992	1992
03	29	HAZ	2007	2008
03	29	HAZ	2006	2006
03	29	HAZ	1998	1998
03	29	HAZ	1998	2005

Response to the NMED information request concerning a list of all LANL locations where hazardous waste, mixed waste, and non-hazardous TRU or low level radioactive waste is generated. This list includes sites recorded in WCATS generating waste as of 01-OCT-1979 through the date the query was run (26-JUN-2014.) The information is broken down into columns as follows:
TA = Technical Area
BLDG = Building within the Technical Area
Waste Type = Haz (ardous), MLLW (Mixed Low Level Waste), TRU (Transuranic) and MTRU (Mixed Transuranic.)
First Fiscal Year Generated = Earliest Fiscal Year Generated
Last Fiscal Year Generated = Latest Fiscal Year Generated

TA	BLDG	Waste Type	First Fiscal Year Generated	Last Fiscal Year Generated
03	29	HAZ	2002	2009
03	3	HAZ	2005	2005
03	3	HAZ	2004	2004
03	3	HAZ	2005	2005
03	30	HAZ	1983	2004
03	30	HAZ	1996	1996
03	30	HAZ	1992	1995
03	30	HAZ	1992	1992
03	30	HAZ	1994	1994
03	30	HAZ	1995	1997
03	30	HAZ	2009	2009
03	30	HAZ	1993	1993
03	30	HAZ	1996	1996
03	30	HAZ	1991	1994
03	30	HAZ	1991	1992
03	30	HAZ	2001	2003
03	300	HAZ	2003	2003
03	3003	HAZ	1996	1996
03	3003	HAZ	1995	1995
03	304	HAZ	2005	2005
03	3074	HAZ	1998	2001
03	31	HAZ	1995	1996
03	31	HAZ	1992	1994
03	312	HAZ	2004	2004
03	313	HAZ	2005	2005
03	316	HAZ	1985	1999
03	316	HAZ	1999	1999
03	316	HAZ	2000	2001
03	317	HAZ	2009	2010
03	317	HAZ	2009	2012
03	317	HAZ	2009	2009
03	317	HAZ	2012	2012

Response to the NMED information request concerning a list of all LANL locations where hazardous waste, mixed waste, and non-hazardous TRU or low level radioactive waste is generated. This list includes sites recorded in WCATS generating waste as of 01-OCT-1979 through the date the query was run (26-JUN-2014.) The information is broken down into columns as follows:
TA = Technical Area
BLDG = Building within the Technical Area
Waste Type = Haz (ardous), MLLW (Mixed Low Level Waste), TRU (Transuranic) and MTRU (Mixed Transuranic.)
First Fiscal Year Generated = Earliest Fiscal Year Generated
Last Fiscal Year Generated = Latest Fiscal Year Generated

TA	BLDG	Waste Type	First Fiscal Year Generated	Last Fiscal Year Generated
03	317	HAZ	2011	2011
03	32	HAZ	1989	1999
03	32	HAZ	1999	1999
03	32	HAZ	1995	1996
03	32	HAZ	1993	2000
03	32	HAZ	1992	1993
03	32	HAZ	1993	1996
03	32	HAZ	1991	2007
03	32	HAZ	1991	1991
03	32	HAZ	1997	1997
03	32	HAZ	1993	2014
03	32	HAZ	1993	2013
03	32	HAZ	2007	2007
03	32	HAZ	2003	2003
03	32	HAZ	2009	2011
03	322	HAZ	1989	2001
03	322	HAZ	2011	2011
03	322	HAZ	2002	2002
03	334	HAZ	2003	2003
03	334	HAZ	2000	2003
03	334	HAZ	2003	2003
03	34	HAZ	1986	2008
03	34	HAZ	1996	1996
03	34	HAZ	1994	2004
03	34	HAZ	2004	2009
03	34	HAZ	1991	2014
03	34	HAZ	1999	1999
03	34	HAZ	1993	2011
03	34	HAZ	1991	2014
03	34	HAZ	2009	2009
03	34	HAZ	2006	2006
03	34	HAZ	1994	2009

Response to the NMED information request concerning a list of all LANL locations where hazardous waste, mixed waste, and non-hazardous TRU or low level radioactive waste is generated. This list includes sites recorded in WCATS generating waste as of 01-OCT-1979 through the date the query was run (26-JUN-2014.) The information is broken down into columns as follows:
TA = Technical Area
BLDG = Building within the Technical Area
Waste Type = Haz (ardous), MLLW (Mixed Low Level Waste), TRU (Transuranic) and MTRU (Mixed Transuranic.)
First Fiscal Year Generated = Earliest Fiscal Year Generated
Last Fiscal Year Generated = Latest Fiscal Year Generated

TA	BLDG	Waste Type	First Fiscal Year Generated	Last Fiscal Year Generated
03	34	HAZ	1997	2013
03	34	HAZ	1991	2014
03	34	HAZ	1995	2014
03	34	HAZ	1993	2014
03	34	HAZ	1993	1993
03	34	HAZ	2007	2007
03	34	HAZ	1994	2013
03	34	HAZ	2001	2010
03	34	HAZ	1992	2007
03	34	HAZ	2001	2005
03	34	HAZ	2004	2004
03	34	HAZ	1996	1996
03	34	HAZ	2009	2014
03	34	HAZ	1991	1991
03	35	HAZ	1989	1991
03	359	HAZ	1997	1997
03	36	HAZ	1998	1998
03	36	HAZ	1991	1993
03	36	HAZ	1992	1992
03	37	HAZ	1986	1995
03	379	HAZ	1992	1992
03	379	HAZ	1991	1998
03	379	HAZ	1993	2001
03	38	HAZ	1991	1991
03	38	HAZ	1992	1992
03	38	HAZ	1983	2014
03	38	HAZ	2007	2011
03	38	HAZ	2001	2014
03	38	HAZ	2006	2006
03	38	HAZ	2001	2003
03	38	HAZ	1992	2003
03	38	HAZ	1991	2001

Response to the NMED information request concerning a list of all LANL locations where hazardous waste, mixed waste, and non-hazardous TRU or low level radioactive waste is generated. This list includes sites recorded in WCATS generating waste as of 01-OCT-1979 through the date the query was run (26-JUN-2014.) The information is broken down into columns as follows:
TA = Technical Area
BLDG = Building within the Technical Area
Waste Type = Haz (ardous), MLLW (Mixed Low Level Waste), TRU (Transuranic) and MTRU (Mixed Transuranic.)
First Fiscal Year Generated = Earliest Fiscal Year Generated
Last Fiscal Year Generated = Latest Fiscal Year Generated

TA	BLDG	Waste Type	First Fiscal Year Generated	Last Fiscal Year Generated
03	38	HAZ	2002	2002
03	38	HAZ	1992	1992
03	38	HAZ	1993	2004
03	38	HAZ	2006	2007
03	38	HAZ	1991	1994
03	38	HAZ	2003	2003
03	38	HAZ	1997	2004
03	38	HAZ	1992	1994
03	38	HAZ	1993	1993
03	38	HAZ	1995	1995
03	38	HAZ	1995	1995
03	38	HAZ	1991	2012
03	38	HAZ	2009	2014
03	38	HAZ	1992	1993
03	38	HAZ	1993	2010
03	38	HAZ	2002	2002
03	382	HAZ	1991	1991
03	388	HAZ	2005	2005
03	39	HAZ	1983	2014
03	39	HAZ	1995	1995
03	39	HAZ	2010	2010
03	39	HAZ	2005	2014
03	39	HAZ	1997	1997
03	39	HAZ	1999	2000
03	39	HAZ	1995	2011
03	39	HAZ	2003	2004
03	39	HAZ	1993	2010
03	39	HAZ	2008	2013
03	39	HAZ	2006	2006
03	39	HAZ	1999	2006
03	39	HAZ	2006	2006
03	39	HAZ	2006	2006

Response to the NMED information request concerning a list of all LANL locations where hazardous waste, mixed waste, and non-hazardous TRU or low level radioactive waste is generated. This list includes sites recorded in WCATS generating waste as of 01-OCT-1979 through the date the query was run (26-JUN-2014.) The information is broken down into columns as follows:
TA = Technical Area
BLDG = Building within the Technical Area
Waste Type = Haz (ardous), MLLW (Mixed Low Level Waste), TRU (Transuranic) and MTRU (Mixed Transuranic.)
First Fiscal Year Generated = Earliest Fiscal Year Generated
Last Fiscal Year Generated = Latest Fiscal Year Generated

TA	BLDG	Waste Type	First Fiscal Year Generated	Last Fiscal Year Generated
03	39	HAZ	2001	2002
03	39	HAZ	2007	2007
03	39	HAZ	1993	1993
03	39	HAZ	2000	2000
03	39	HAZ	2000	2000
03	39	HAZ	1997	1999
03	39	HAZ	1992	2011
03	39	HAZ	1991	2006
03	39	HAZ	2009	2014
03	39	HAZ	1992	1992
03	39	HAZ	1993	1993
03	39	HAZ	2000	2000
03	39	HAZ	1998	2011
03	39	HAZ	1992	1992
03	39	HAZ	1991	1992
03	39	HAZ	1991	1994
03	39	HAZ	1993	1993
03	39	HAZ	1991	1991
03	39	HAZ	1992	1992
03	39	HAZ	1991	1994
03	39	HAZ	1993	1995
03	390	HAZ	1991	1991
03	391	HAZ	1996	1999
03	40	HAZ	1983	2013
03	40	HAZ	2000	2000
03	40	HAZ	2000	2000
03	40	HAZ	1997	2003
03	40	HAZ	1992	2004
03	40	HAZ	1997	2004
03	40	HAZ	1996	1998
03	40	HAZ	1995	2009
03	40	HAZ	1998	1998

Response to the NMED information request concerning a list of all LANL locations where hazardous waste, mixed waste, and non-hazardous TRU or low level radioactive waste is generated. This list includes sites recorded in WCATS generating waste as of 01-OCT-1979 through the date the query was run (26-JUN-2014.) The information is broken down into columns as follows:
TA = Technical Area
BLDG = Building within the Technical Area
Waste Type = Haz (ardous), MLLW (Mixed Low Level Waste), TRU (Transuranic) and MTRU (Mixed Transuranic.)
First Fiscal Year Generated = Earliest Fiscal Year Generated
Last Fiscal Year Generated = Latest Fiscal Year Generated

TA	BLDG	Waste Type	First Fiscal Year Generated	Last Fiscal Year Generated
03	40	HAZ	1992	1992
03	40	HAZ	2006	2008
03	40	HAZ	1992	2003
03	40	HAZ	1994	1995
03	40	HAZ	1996	1996
03	40	HAZ	2004	2006
03	40	HAZ	1993	2006
03	40	HAZ	1999	1999
03	40	HAZ	1993	1998
03	40	HAZ	1992	2013
03	40	HAZ	1996	1996
03	40	HAZ	1997	1998
03	40	HAZ	1996	1996
03	40	HAZ	1992	1992
03	40	HAZ	1992	1992
03	40	HAZ	1995	1995
03	40	HAZ	2001	2001
03	40	HAZ	1998	2008
03	40	HAZ	2003	2003
03	40	HAZ	2004	2004
03	40	HAZ	2005	2007
03	40	HAZ	1999	1999
03	40	HAZ	1992	1992
03	40	HAZ	1993	1996
03	40	HAZ	2008	2008
03	40	HAZ	1998	1998
03	40	HAZ	2000	2000
03	40	HAZ	1998	1998
03	40	HAZ	1998	1998
03	40	HAZ	2010	2010
03	40	HAZ	2008	2013
03	40	HAZ	2008	2008

Response to the NMED information request concerning a list of all LANL locations where hazardous waste, mixed waste, and non-hazardous TRU or low level radioactive waste is generated. This list includes sites recorded in WCATS generating waste as of 01-OCT-1979 through the date the query was run (26-JUN-2014.) The information is broken down into columns as follows:
TA = Technical Area
BLDG = Building within the Technical Area
Waste Type = Haz (ardous), MLLW (Mixed Low Level Waste), TRU (Transuranic) and MTRU (Mixed Transuranic.)
First Fiscal Year Generated = Earliest Fiscal Year Generated
Last Fiscal Year Generated = Latest Fiscal Year Generated

TA	BLDG	Waste Type	First Fiscal Year Generated	Last Fiscal Year Generated
03	40	HAZ	2008	2008
03	40	HAZ	1998	2009
03	40	HAZ	1992	2011
03	40	HAZ	2011	2011
03	40	HAZ	1992	2008
03	40	HAZ	1993	2013
03	40	HAZ	1998	2001
03	40	HAZ	1993	1993
03	40	HAZ	1992	2013
03	40	HAZ	2001	2013
03	40	HAZ	1998	2008
03	40	HAZ	1998	2010
03	40	HAZ	1997	1998
03	40	HAZ	2003	2013
03	40	HAZ	2008	2008
03	40	HAZ	1995	1995
03	40	HAZ	1992	2005
03	40	HAZ	2002	2002
03	40	HAZ	1995	1999
03	40	HAZ	1995	1995
03	40	HAZ	1993	2013
03	40	HAZ	1994	1999
03	40	HAZ	1993	1993
03	40	HAZ	1997	2008
03	40	HAZ	1993	2002
03	40	HAZ	1991	2013
03	40	HAZ	1992	1992
03	40	HAZ	2001	2001
03	40	HAZ	2010	2010
03	40	HAZ	1992	1992
03	40	HAZ	1998	1998
03	40	HAZ	2005	2008

Response to the NMED information request concerning a list of all LANL locations where hazardous waste, mixed waste, and non-hazardous TRU or low level radioactive waste is generated. This list includes sites recorded in WCATS generating waste as of 01-OCT-1979 through the date the query was run (26-JUN-2014.) The information is broken down into columns as follows:
TA = Technical Area
BLDG = Building within the Technical Area
Waste Type = Haz (ardous), MLLW (Mixed Low Level Waste), TRU (Transuranic) and MTRU (Mixed Transuranic.)
First Fiscal Year Generated = Earliest Fiscal Year Generated
Last Fiscal Year Generated = Latest Fiscal Year Generated

TA	BLDG	Waste Type	First Fiscal Year Generated	Last Fiscal Year Generated
03	40	HAZ	1995	1995
03	40	HAZ	2009	2009
03	40	HAZ	1995	2013
03	40	HAZ	1992	1999
03	40	HAZ	2001	2001
03	40	HAZ	1993	1993
03	409	HAZ	1991	1994
03	409	HAZ	2004	2004
03	409	HAZ	1991	1993
03	409	HAZ	1995	2005
03	409	HAZ	1993	1993
03	4090	HAZ	1991	1991
03	410	HAZ	1987	1992
03	410	HAZ	1993	1995
03	410	HAZ	1991	1992
03	4200	HAZ	2004	2010
03	4200	HAZ	2012	2012
03	4200	HAZ	2009	2010
03	4200	HAZ	2009	2010
03	4200	HAZ	2010	2010
03	4200	HAZ	2005	2013
03	4200	HAZ	2004	2011
03	4200	HAZ	2004	2011
03	4200	HAZ	2009	2013
03	4200	HAZ	2003	2010
03	4200	HAZ	2009	2012
03	422	HAZ	1990	1990
03	426	HAZ	2004	2004
03	43	HAZ	1983	1999
03	43	HAZ	1991	1992
03	43	HAZ	1991	1991
03	43	HAZ	1992	1997

Response to the NMED information request concerning a list of all LANL locations where hazardous waste, mixed waste, and non-hazardous TRU or low level radioactive waste is generated. This list includes sites recorded in WCATS generating waste as of 01-OCT-1979 through the date the query was run (26-JUN-2014.) The information is broken down into columns as follows:
TA = Technical Area
BLDG = Building within the Technical Area
Waste Type = Haz (ardous), MLLW (Mixed Low Level Waste), TRU (Transuranic) and MTRU (Mixed Transuranic.)
First Fiscal Year Generated = Earliest Fiscal Year Generated
Last Fiscal Year Generated = Latest Fiscal Year Generated

TA	BLDG	Waste Type	First Fiscal Year Generated	Last Fiscal Year Generated
03	43	HAZ	1996	1997
03	43	HAZ	1992	1992
03	43	HAZ	1996	1996
03	43	HAZ	1992	1992
03	43	HAZ	1995	1995
03	43	HAZ	1992	1993
03	43	HAZ	1992	1992
03	43	HAZ	2010	2011
03	43	HAZ	2003	2004
03	43	HAZ	1999	2000
03	43	HAZ	1995	1997
03	43	HAZ	1992	1992
03	43	HAZ	1991	2001
03	43	HAZ	1995	1995
03	43	HAZ	1992	1992
03	43	HAZ	1992	1996
03	43	HAZ	1997	1997
03	43	HAZ	2009	2011
03	44	HAZ	2003	2013
03	440	HAZ	1991	1991
03	45	HAZ	2002	2002
03	455	HAZ	1997	2005
03	460	HAZ	2004	2004
03	462	HAZ	1995	1995
03	47	HAZ	1991	2004
03	473	HAZ	1990	1990
03	474	HAZ	1993	1993
03	480	HAZ	1988	1988
03	490	HAZ	1991	1991
03	494	HAZ	1989	2014
03	494	HAZ	1991	2014
03	494	HAZ	1992	1992

Response to the NMED information request concerning a list of all LANL locations where hazardous waste, mixed waste, and non-hazardous TRU or low level radioactive waste is generated. This list includes sites recorded in WCATS generating waste as of 01-OCT-1979 through the date the query was run (26-JUN-2014.) The information is broken down into columns as follows:
TA = Technical Area
BLDG = Building within the Technical Area
Waste Type = Haz (ardous), MLLW (Mixed Low Level Waste), TRU (Transuranic) and MTRU (Mixed Transuranic.)
First Fiscal Year Generated = Earliest Fiscal Year Generated
Last Fiscal Year Generated = Latest Fiscal Year Generated

TA	BLDG	Waste Type	First Fiscal Year Generated	Last Fiscal Year Generated
03	494	HAZ	2002	2002
03	494	HAZ	1991	2014
03	494	HAZ	2009	2011
03	5	HAZ	2005	2005
03	502	HAZ	1988	2006
03	502	HAZ	1992	1994
03	502	HAZ	2004	2004
03	502	HAZ	1992	1994
03	502	HAZ	1993	2013
03	502	HAZ	2006	2006
03	502	HAZ	1991	1992
03	502	HAZ	2006	2006
03	502	HAZ	2009	2013
03	502	HAZ	1991	1993
03	502	HAZ	1996	2000
03	502	HAZ	1992	1995
03	502	HAZ	2007	2007
03	502	HAZ	2008	2014
03	510	HAZ	1993	1996
03	510	HAZ	1995	1995
03	510	HAZ	1992	1997
03	521	HAZ	1999	1999
03	60	HAZ	1995	1995
03	65	HAZ	1990	1992
03	65	HAZ	1996	2007
03	66	HAZ	1983	2009
03	66	HAZ	1999	1999
03	66	HAZ	1996	1996
03	66	HAZ	1996	1996
03	66	HAZ	1996	1996
03	66	HAZ	1994	2002
03	66	HAZ	1992	2001

Response to the NMED information request concerning a list of all LANL locations where hazardous waste, mixed waste, and non-hazardous TRU or low level radioactive waste is generated. This list includes sites recorded in WCATS generating waste as of 01-OCT-1979 through the date the query was run (26-JUN-2014.) The information is broken down into columns as follows:
TA = Technical Area
BLDG = Building within the Technical Area
Waste Type = Haz (ardous), MLLW (Mixed Low Level Waste), TRU (Transuranic) and MTRU (Mixed Transuranic.)
First Fiscal Year Generated = Earliest Fiscal Year Generated
Last Fiscal Year Generated = Latest Fiscal Year Generated

TA	BLDG	Waste Type	First Fiscal Year Generated	Last Fiscal Year Generated
03	66	HAZ	1991	1991
03	66	HAZ	1998	1998
03	66	HAZ	1992	1998
03	66	HAZ	1993	1995
03	66	HAZ	1996	2001
03	66	HAZ	1994	1994
03	66	HAZ	1995	2013
03	66	HAZ	2009	2013
03	66	HAZ	1993	1993
03	66	HAZ	1992	1992
03	66	HAZ	1996	2011
03	66	HAZ	2000	2000
03	66	HAZ	1993	1994
03	66	HAZ	2010	2011
03	66	HAZ	1998	2012
03	66	HAZ	1994	1994
03	66	HAZ	2003	2009
03	66	HAZ	1992	2000
03	66	HAZ	1992	1992
03	66	HAZ	1993	1993
03	66	HAZ	1998	1998
03	66	HAZ	2001	2001
03	66	HAZ	2001	2013
03	66	HAZ	1992	2013
03	66	HAZ	1998	2002
03	66	HAZ	2001	2001
03	66	HAZ	1992	2004
03	66	HAZ	1998	1998
03	66	HAZ	1992	2000
03	66	HAZ	1999	1999
03	66	HAZ	1994	2013
03	66	HAZ	1991	2014

Response to the NMED information request concerning a list of all LANL locations where hazardous waste, mixed waste, and non-hazardous TRU or low level radioactive waste is generated. This list includes sites recorded in WCATS generating waste as of 01-OCT-1979 through the date the query was run (26-JUN-2014.) The information is broken down into columns as follows:
TA = Technical Area
BLDG = Building within the Technical Area
Waste Type = Haz (ardous), MLLW (Mixed Low Level Waste), TRU (Transuranic) and MTRU (Mixed Transuranic.)
First Fiscal Year Generated = Earliest Fiscal Year Generated
Last Fiscal Year Generated = Latest Fiscal Year Generated

TA	BLDG	Waste Type	First Fiscal Year Generated	Last Fiscal Year Generated
03	66	HAZ	2001	2001
03	66	HAZ	2000	2013
03	66	HAZ	2009	2013
03	66	HAZ	1993	2006
03	66	HAZ	1992	2011
03	66	HAZ	1991	2006
03	66	HAZ	2010	2010
03	66	HAZ	1991	2013
03	66	HAZ	1996	2012
03	66	HAZ	1998	2005
03	66	HAZ	1992	1993
03	66	HAZ	2001	2001
03	66	HAZ	2002	2003
03	70	HAZ	1992	2005
03	73	HAZ	1998	1999
03	85	HAZ	2003	2005
03	86	HAZ	2003	2003
03	86	HAZ	2003	2003
03	87	HAZ	2005	2005
03	88	HAZ	1991	1991
03	901	HAZ	2003	2003
03	91	HAZ	2004	2004
03	95	HAZ	2005	2005
03	968	HAZ	1999	1999
03	GEN-AREAS	HAZ	2000	2005
03	GEN-AREAS	HAZ	2005	2005
03	GEN-AREAS	HAZ	1983	2008
03	GEN-AREAS	HAZ	2009	2014
03	GEN-AREAS	HAZ	2000	2008
03	L90-03473	HAZ	2010	2010
03	SM40	HAZ	1996	1996
03-CMR	150	HAZ	1998	1998

Response to the NMED information request concerning a list of all LANL locations where hazardous waste, mixed waste, and non-hazardous TRU or low level radioactive waste is generated. This list includes sites recorded in WCATS generating waste as of 01-OCT-1979 through the date the query was run (26-JUN-2014.) The information is broken down into columns as follows:
TA = Technical Area
BLDG = Building within the Technical Area
Waste Type = Haz (ardous), MLLW (Mixed Low Level Waste), TRU (Transuranic) and MTRU (Mixed Transuranic.)
First Fiscal Year Generated = Earliest Fiscal Year Generated
Last Fiscal Year Generated = Latest Fiscal Year Generated

TA	BLDG	Waste Type	First Fiscal Year Generated	Last Fiscal Year Generated
03-CMR	154	HAZ	2003	2003
03-CMR	2	HAZ	1993	1994
03-CMR	20	HAZ	2001	2001
03-CMR	2206	HAZ	2002	2002
03-CMR	271	HAZ	1991	1991
03-CMR	29	HAZ	1995	1995
03-CMR	29	HAZ	2004	2005
03-CMR	29	HAZ	1998	1998
03-CMR	29	HAZ	1998	1998
03-CMR	29	HAZ	1999	1999
03-CMR	29	HAZ	2001	2001
03-CMR	29	HAZ	1993	2001
03-CMR	29	HAZ	2002	2002
03-CMR	29	HAZ	1999	2000
03-CMR	29	HAZ	1995	1998
03-CMR	29	HAZ	1996	2000
03-CMR	29	HAZ	1996	1996
03-CMR	29	HAZ	2002	2002
03-CMR	29	HAZ	1997	1997
03-CMR	29	HAZ	1992	1999
03-CMR	29	HAZ	1992	2000
03-CMR	29	HAZ	1999	1999
03-CMR	29	HAZ	1999	1999
03-CMR	29	HAZ	1993	1997
03-CMR	29	HAZ	1996	2003
03-CMR	29	HAZ	1992	1998
03-CMR	29	HAZ	1996	1997
03-CMR	29	HAZ	2000	2002
03-CMR	29	HAZ	1994	1994
03-CMR	29	HAZ	1992	1999
03-CMR	29	HAZ	1999	2000
03-CMR	29	HAZ	1992	2001

Response to the NMED information request concerning a list of all LANL locations where hazardous waste, mixed waste, and non-hazardous TRU or low level radioactive waste is generated. This list includes sites recorded in WCATS generating waste as of 01-OCT-1979 through the date the query was run (26-JUN-2014.) The information is broken down into columns as follows:
TA = Technical Area
BLDG = Building within the Technical Area
Waste Type = Haz (ardous), MLLW (Mixed Low Level Waste), TRU (Transuranic) and MTRU (Mixed Transuranic.)
First Fiscal Year Generated = Earliest Fiscal Year Generated
Last Fiscal Year Generated = Latest Fiscal Year Generated

TA	BLDG	Waste Type	First Fiscal Year Generated	Last Fiscal Year Generated
03-CMR	29	HAZ	1997	1998
03-CMR	29	HAZ	1997	1997
03-CMR	29	HAZ	2000	2001
03-CMR	29	HAZ	1999	2000
03-CMR	29	HAZ	2002	2003
03-CMR	29	HAZ	1994	1994
03-CMR	29	HAZ	1992	1992
03-CMR	29	HAZ	1999	1999
03-CMR	29	HAZ	1994	1994
03-CMR	29	HAZ	1992	1992
03-CMR	29	HAZ	1999	1999
03-CMR	29	HAZ	2000	2000
03-CMR	29	HAZ	1998	1999
03-CMR	29	HAZ	1996	1996
03-CMR	29	HAZ	1998	1999
03-CMR	29	HAZ	2002	2002
03-CMR	29	HAZ	1997	1997
03-CMR	29	HAZ	1999	2002
03-CMR	29	HAZ	1992	1993
03-CMR	29	HAZ	1994	1996
03-CMR	29	HAZ	2000	2003
03-CMR	29	HAZ	1996	1996
03-CMR	29	HAZ	1992	1992
03-CMR	29	HAZ	2005	2005
03-CMR	29	HAZ	2000	2001
03-CMR	29	HAZ	1993	2003
03-CMR	29	HAZ	1997	1997
03-CMR	29	HAZ	1995	1998
03-CMR	29	HAZ	1993	1995
03-CMR	29	HAZ	1997	1999
03-CMR	29	HAZ	1996	1996
03-CMR	29	HAZ	1992	1992

Response to the NMED information request concerning a list of all LANL locations where hazardous waste, mixed waste, and non-hazardous TRU or low level radioactive waste is generated. This list includes sites recorded in WCATS generating waste as of 01-OCT-1979 through the date the query was run (26-JUN-2014.) The information is broken down into columns as follows:
TA = Technical Area
BLDG = Building within the Technical Area
Waste Type = Haz (ardous), MLLW (Mixed Low Level Waste), TRU (Transuranic) and MTRU (Mixed Transuranic.)
First Fiscal Year Generated = Earliest Fiscal Year Generated
Last Fiscal Year Generated = Latest Fiscal Year Generated

TA	BLDG	Waste Type	First Fiscal Year Generated	Last Fiscal Year Generated
03-CMR	29	HAZ	2001	2001
03-CMR	29	HAZ	1998	1998
03-CMR	29	HAZ	1993	1993
03-CMR	29	HAZ	1995	1999
03-CMR	29	HAZ	1998	1998
03-CMR	29	HAZ	1994	1994
03-CMR	29	HAZ	2000	2000
03-CMR	29	HAZ	1998	1998
03-CMR	29	HAZ	1999	2002
03-CMR	29	HAZ	1992	1997
03-CMR	29	HAZ	2003	2003
03-CMR	29	HAZ	1992	1992
03-CMR	29	HAZ	1995	1996
03-CMR	29	HAZ	2007	2007
03-CMR	29	HAZ	2003	2008
03-CMR	29	HAZ	1993	1993
03-CMR	29	HAZ	1999	1999
03-CMR	29	HAZ	1999	1999
03-CMR	29	HAZ	1997	1999
03-CMR	29	HAZ	2002	2002
03-CMR	29	HAZ	1995	2008
03-CMR	29	HAZ	1997	1997
03-CMR	29	HAZ	1993	1993
03-CMR	29	HAZ	1995	2009
03-CMR	29	HAZ	2001	2001
03-CMR	29	HAZ	1992	1992
03-CMR	29	HAZ	2000	2001
03-CMR	29	HAZ	1994	1995
03-CMR	29	HAZ	1995	1995
03-CMR	29	HAZ	2004	2004
03-CMR	29	HAZ	2002	2003
03-CMR	29	HAZ	1993	1993

Response to the NMED information request concerning a list of all LANL locations where hazardous waste, mixed waste, and non-hazardous TRU or low level radioactive waste is generated. This list includes sites recorded in WCATS generating waste as of 01-OCT-1979 through the date the query was run (26-JUN-2014.) The information is broken down into columns as follows:
TA = Technical Area
BLDG = Building within the Technical Area
Waste Type = Haz (ardous), MLLW (Mixed Low Level Waste), TRU (Transuranic) and MTRU (Mixed Transuranic.)
First Fiscal Year Generated = Earliest Fiscal Year Generated
Last Fiscal Year Generated = Latest Fiscal Year Generated

TA	BLDG	Waste Type	First Fiscal Year Generated	Last Fiscal Year Generated
03-CMR	29	HAZ	2001	2002
03-CMR	29	HAZ	1992	2000
03-CMR	29	HAZ	1995	1995
03-CMR	29	HAZ	1999	1999
03-CMR	29	HAZ	1992	2003
03-CMR	29	HAZ	1995	2003
03-CMR	29	HAZ	1991	2004
03-CMR	29	HAZ	1995	2002
03-CMR	29	HAZ	1994	2003
03-CMR	29	HAZ	2000	2009
03-CMR	29	HAZ	2000	2004
03-CMR	3	HAZ	1993	1993
03-CMR	30	HAZ	1995	1995
03-CMR	4	HAZ	1999	1999
03-CMR	43	HAZ	1995	1995
03-CMR	GEN-AREAS	HAZ	1983	2003
03-CMR	GEN-AREAS	HAZ	2013	2013
03-CMR	WING1	HAZ	1993	1993
03-CMR	WING2	HAZ	1986	1998
03-CMR	WING3	HAZ	2009	2009
03-CMR	WING3	HAZ	1985	1998
03-CMR	WING4	HAZ	1983	1999
03-CMR	WING5	HAZ	1984	1997
03-CMR	WING7	HAZ	1985	1998
03-CMR	WING9	HAZ	1988	1988
03-CMR	WINGA	HAZ	1995	1995
03-CMR	WSUP	HAZ	2010	2011
03-CMR	WSUP	HAZ	1985	2008
04	34	HAZ	2007	2007
04	76	HAZ	2007	2007
04	GEN-AREAS	HAZ	2007	2007
05	1	HAZ	1998	1998

Response to the NMED information request concerning a list of all LANL locations where hazardous waste, mixed waste, and non-hazardous TRU or low level radioactive waste is generated. This list includes sites recorded in WCATS generating waste as of 01-OCT-1979 through the date the query was run (26-JUN-2014.) The information is broken down into columns as follows:
TA = Technical Area
BLDG = Building within the Technical Area
Waste Type = Haz (ardous), MLLW (Mixed Low Level Waste), TRU (Transuranic) and MTRU (Mixed Transuranic.)
First Fiscal Year Generated = Earliest Fiscal Year Generated
Last Fiscal Year Generated = Latest Fiscal Year Generated

TA	BLDG	Waste Type	First Fiscal Year Generated	Last Fiscal Year Generated
05	1	HAZ	1999	1999
05	GEN-AREAS	HAZ	2011	2011
05	GEN-AREAS	HAZ	2014	2014
06	114	HAZ	1997	1997
06	202	HAZ	1999	1999
06	24	HAZ	1999	1999
06	245	HAZ	2005	2005
06	31	HAZ	1999	1999
06	31	HAZ	1999	1999
06	6	HAZ	1996	1996
06	GEN-AREAS	HAZ	1992	1994
08	2	HAZ	1995	1995
08	21	HAZ	1986	1995
08	21	HAZ	1998	1998
08	21	HAZ	2008	2008
08	21	HAZ	1992	1992
08	21	HAZ	2008	2008
08	21	HAZ	2000	2001
08	22	HAZ	1990	1999
08	22	HAZ	1997	2010
08	22	HAZ	1992	1992
08	22	HAZ	2011	2011
08	22	HAZ	2013	2013
08	23	HAZ	1996	1996
08	23	HAZ	1999	2008
08	23	HAZ	2008	2008
08	23	HAZ	2003	2003
08	24	HAZ	2007	2007
08	24	HAZ	2007	2007
08	26	HAZ	2004	2004
08	27	HAZ	2000	2000
08	273	HAZ	2000	2000

Response to the NMED information request concerning a list of all LANL locations where hazardous waste, mixed waste, and non-hazardous TRU or low level radioactive waste is generated. This list includes sites recorded in WCATS generating waste as of 01-OCT-1979 through the date the query was run (26-JUN-2014.) The information is broken down into columns as follows:
TA = Technical Area
BLDG = Building within the Technical Area
Waste Type = Haz (ardous), MLLW (Mixed Low Level Waste), TRU (Transuranic) and MTRU (Mixed Transuranic.)
First Fiscal Year Generated = Earliest Fiscal Year Generated
Last Fiscal Year Generated = Latest Fiscal Year Generated

TA	BLDG	Waste Type	First Fiscal Year Generated	Last Fiscal Year Generated
08	30	HAZ	1996	1996
08	32	HAZ	1988	1988
08	39	HAZ	2011	2011
08	510	HAZ	1995	1996
08	59	HAZ	1995	1995
08	70	HAZ	2002	2002
08	70	HAZ	1988	2002
08	70	HAZ	1992	2007
08	70	HAZ	2007	2007
08	70	HAZ	1996	1996
08	70	HAZ	1996	1996
08	70	HAZ	2014	2014
08	859	HAZ	1995	1995
08	GEN-AREAS	HAZ	2012	2012
08	GEN-AREAS	HAZ	1988	2004
08	GEN-AREAS	HAZ	2008	2008
09	125	HAZ	1997	1997
09	160	HAZ	2007	2007
09	160	HAZ	2005	2007
09	160	HAZ	2002	2002
09	160	HAZ	2005	2005
09	183	HAZ	2001	2001
09	183	HAZ	1998	1998
09	183	HAZ	2001	2001
09	187	HAZ	2007	2007
09	204	HAZ	2011	2011
09	21	HAZ	1983	2012
09	21	HAZ	1995	2011
09	21	HAZ	1998	2009
09	21	HAZ	2003	2010
09	21	HAZ	1995	2011
09	21	HAZ	1995	2007

Response to the NMED information request concerning a list of all LANL locations where hazardous waste, mixed waste, and non-hazardous TRU or low level radioactive waste is generated. This list includes sites recorded in WCATS generating waste as of 01-OCT-1979 through the date the query was run (26-JUN-2014.) The information is broken down into columns as follows:
TA = Technical Area
BLDG = Building within the Technical Area
Waste Type = Haz (ardous), MLLW (Mixed Low Level Waste), TRU (Transuranic) and MTRU (Mixed Transuranic.)
First Fiscal Year Generated = Earliest Fiscal Year Generated
Last Fiscal Year Generated = Latest Fiscal Year Generated

TA	BLDG	Waste Type	First Fiscal Year Generated	Last Fiscal Year Generated
09	21	HAZ	1997	2008
09	21	HAZ	1995	2007
09	21	HAZ	1995	2014
09	21	HAZ	2007	2013
09	21	HAZ	2004	2007
09	21	HAZ	2003	2003
09	21	HAZ	2004	2006
09	21	HAZ	2007	2013
09	21	HAZ	2007	2013
09	21	HAZ	2004	2006
09	21	HAZ	2005	2012
09	21	HAZ	2005	2007
09	21	HAZ	1996	2013
09	21	HAZ	2003	2006
09	21	HAZ	2008	2012
09	21	HAZ	2004	2004
09	21	HAZ	1995	2009
09	21	HAZ	2007	2014
09	21	HAZ	1998	2007
09	21	HAZ	2000	2012
09	21	HAZ	1998	2012
09	21	HAZ	1997	1997
09	21	HAZ	1999	2004
09	21	HAZ	2002	2005
09	21	HAZ	1997	1997
09	21	HAZ	2009	2014
09	214	HAZ	1999	2003
09	214	HAZ	1996	1996
09	214	HAZ	2006	2006
09	26	HAZ	2004	2004
09	264	HAZ	2000	2004
09	268	HAZ	2008	2008

Response to the NMED information request concerning a list of all LANL locations where hazardous waste, mixed waste, and non-hazardous TRU or low level radioactive waste is generated. This list includes sites recorded in WCATS generating waste as of 01-OCT-1979 through the date the query was run (26-JUN-2014.) The information is broken down into columns as follows:
TA = Technical Area
BLDG = Building within the Technical Area
Waste Type = Haz (ardous), MLLW (Mixed Low Level Waste), TRU (Transuranic) and MTRU (Mixed Transuranic.)
First Fiscal Year Generated = Earliest Fiscal Year Generated
Last Fiscal Year Generated = Latest Fiscal Year Generated

TA	BLDG	Waste Type	First Fiscal Year Generated	Last Fiscal Year Generated
09	272	HAZ	1996	1996
09	272	HAZ	1996	1999
09	272	HAZ	1997	1997
09	273	HAZ	1998	2003
09	278	HAZ	1999	1999
09	278	HAZ	1999	1999
09	28	HAZ	1990	1991
09	29	HAZ	1987	2003
09	29	HAZ	2003	2003
09	29	HAZ	2003	2003
09	29	HAZ	1997	1997
09	29	HAZ	2010	2010
09	29	HAZ	2010	2010
09	30	HAZ	2001	2001
09	32	HAZ	1997	1999
09	32	HAZ	2006	2006
09	33	HAZ	2001	2004
09	34	HAZ	1997	2010
09	37	HAZ	1995	2012
09	37	HAZ	2006	2008
09	37	HAZ	1995	2014
09	37	HAZ	2010	2010
09	38	HAZ	1989	1989
09	38	HAZ	1996	1998
09	38	HAZ	2010	2010
09	39	HAZ	1997	1997
09	41	HAZ	1992	1992
09	42	HAZ	1996	1996
09	45	HAZ	1990	1990
09	45	HAZ	1996	2008
09	45	HAZ	2009	2009
09	46	HAZ	2006	2014

Response to the NMED information request concerning a list of all LANL locations where hazardous waste, mixed waste, and non-hazardous TRU or low level radioactive waste is generated. This list includes sites recorded in WCATS generating waste as of 01-OCT-1979 through the date the query was run (26-JUN-2014.) The information is broken down into columns as follows:
TA = Technical Area
BLDG = Building within the Technical Area
Waste Type = Haz (ardous), MLLW (Mixed Low Level Waste), TRU (Transuranic) and MTRU (Mixed Transuranic.)
First Fiscal Year Generated = Earliest Fiscal Year Generated
Last Fiscal Year Generated = Latest Fiscal Year Generated

TA	BLDG	Waste Type	First Fiscal Year Generated	Last Fiscal Year Generated
09	460	HAZ	1993	1993
09	48	HAZ	2004	2004
09	48	HAZ	2006	2006
09	48	HAZ	2009	2011
09	49	HAZ	1998	2002
09	50	HAZ	2002	2002
09	6	HAZ	2002	2002
09	9013	HAZ	1996	1996
09	GEN-AREAS	HAZ	1990	2008
10	GEN-AREAS	HAZ	2003	2003
11	24	HAZ	1990	1990
11	24	HAZ	2009	2009
11	24	HAZ	1993	1993
11	901	HAZ	2002	2002
11	GEN-AREAS	HAZ	1990	1990
12	183	HAZ	1995	1995
13	GEN-AREAS	HAZ	2007	2008
14	14	HAZ	1997	1997
14	23	HAZ	2007	2007
14	23	HAZ	2007	2007
14	23	HAZ	1998	2002
14	39	HAZ	2010	2010
14	40	HAZ	1989	1989
14	43	HAZ	1998	1998
14	43	HAZ	1998	1998
14	GEN-AREAS	HAZ	1989	2007
15	12	HAZ	2013	2013
15	12	HAZ	2014	2014
15	154	HAZ	2008	2008
15	183	HAZ	1987	2002
15	183	HAZ	1999	1999
15	183	HAZ	1995	2007

Response to the NMED information request concerning a list of all LANL locations where hazardous waste, mixed waste, and non-hazardous TRU or low level radioactive waste is generated. This list includes sites recorded in WCATS generating waste as of 01-OCT-1979 through the date the query was run (26-JUN-2014.) The information is broken down into columns as follows:
TA = Technical Area
BLDG = Building within the Technical Area
Waste Type = Haz (ardous), MLLW (Mixed Low Level Waste), TRU (Transuranic) and MTRU (Mixed Transuranic.)
First Fiscal Year Generated = Earliest Fiscal Year Generated
Last Fiscal Year Generated = Latest Fiscal Year Generated

TA	BLDG	Waste Type	First Fiscal Year Generated	Last Fiscal Year Generated
15	183	HAZ	1992	1995
15	183	HAZ	1998	2001
15	183	HAZ	1998	2001
15	184	HAZ	1998	1998
15	185	HAZ	1987	2006
15	185	HAZ	1996	1996
15	185	HAZ	1997	2000
15	186	HAZ	1990	1990
15	203	HAZ	2002	2002
15	203	HAZ	2002	2002
15	21	HAZ	2008	2008
15	21	HAZ	2001	2001
15	245	HAZ	1996	1996
15	245	HAZ	2005	2005
15	245	HAZ	1993	1993
15	285	HAZ	2003	2004
15	285	HAZ	1999	2003
15	30	HAZ	1998	2001
15	30	HAZ	1997	2001
15	305	HAZ	2002	2002
15	306	HAZ	1992	1992
15	306	HAZ	1987	2014
15	306	HAZ	1993	1994
15	306	HAZ	1992	1993
15	312	HAZ	2003	2003
15	312	HAZ	2009	2010
15	312	HAZ	2010	2011
15	312	HAZ	2003	2014
15	312	HAZ	2004	2004
15	312	HAZ	2011	2014
15	312	HAZ	2008	2012
15	312	HAZ	2003	2003

Response to the NMED information request concerning a list of all LANL locations where hazardous waste, mixed waste, and non-hazardous TRU or low level radioactive waste is generated. This list includes sites recorded in WCATS generating waste as of 01-OCT-1979 through the date the query was run (26-JUN-2014.) The information is broken down into columns as follows:
TA = Technical Area
BLDG = Building within the Technical Area
Waste Type = Haz (ardous), MLLW (Mixed Low Level Waste), TRU (Transuranic) and MTRU (Mixed Transuranic.)
First Fiscal Year Generated = Earliest Fiscal Year Generated
Last Fiscal Year Generated = Latest Fiscal Year Generated

TA	BLDG	Waste Type	First Fiscal Year Generated	Last Fiscal Year Generated
15	313	HAZ	1991	2014
15	313	HAZ	1995	2000
15	313	HAZ	1997	1997
15	313	HAZ	2005	2005
15	314	HAZ	2003	2003
15	329	HAZ	2003	2003
15	40	HAZ	1992	1992
15	40	HAZ	1991	1992
15	40	HAZ	2007	2007
15	494	HAZ	2014	2014
15	534	HAZ	2012	2012
15	534	HAZ	2011	2011
15	534	HAZ	2008	2008
15	534	HAZ	2010	2010
15	6	HAZ	2008	2009
15	6	HAZ	2008	2008
15	76	HAZ	2007	2007
15	86	HAZ	1994	1994
15	GEN-AREAS	HAZ	1985	2005
16	1	HAZ	2007	2007
16	101	HAZ	1996	1996
16	1237	HAZ	1998	1998
16	1459	HAZ	1999	1999
16	1483	HAZ	2003	2003
16	16	HAZ	1996	1997
16	16	HAZ	1996	2014
16	193	HAZ	1999	2003
16	193	HAZ	1996	1996
16	193	HAZ	2000	2000
16	193	HAZ	1996	1996
16	195	HAZ	1998	2001
16	195	HAZ	1995	1996

Response to the NMED information request concerning a list of all LANL locations where hazardous waste, mixed waste, and non-hazardous TRU or low level radioactive waste is generated. This list includes sites recorded in WCATS generating waste as of 01-OCT-1979 through the date the query was run (26-JUN-2014.) The information is broken down into columns as follows:
TA = Technical Area
BLDG = Building within the Technical Area
Waste Type = Haz (ardous), MLLW (Mixed Low Level Waste), TRU (Transuranic) and MTRU (Mixed Transuranic.)
First Fiscal Year Generated = Earliest Fiscal Year Generated
Last Fiscal Year Generated = Latest Fiscal Year Generated

TA	BLDG	Waste Type	First Fiscal Year Generated	Last Fiscal Year Generated
16	200	HAZ	1983	1999
16	200	HAZ	1991	1991
16	200	HAZ	1999	1999
16	202	HAZ	1988	2013
16	202	HAZ	2004	2011
16	202	HAZ	2000	2000
16	202	HAZ	1998	1999
16	202	HAZ	2003	2003
16	202	HAZ	2009	2014
16	202	HAZ	2002	2002
16	202	HAZ	2001	2001
16	203	HAZ	1997	1997
16	204	HAZ	1991	1992
16	204	HAZ	1995	1995
16	205	HAZ	1993	1998
16	205	HAZ	1998	2005
16	205	HAZ	1998	2001
16	207	HAZ	1995	2010
16	207	HAZ	1991	1992
16	207	HAZ	1995	1995
16	207	HAZ	2010	2014
16	216	HAZ	2009	2009
16	218	HAZ	1991	1996
16	218	HAZ	1993	1996
16	218	HAZ	1995	1998
16	22	HAZ	1999	1999
16	22	HAZ	2001	2001
16	22	HAZ	1997	1997
16	220	HAZ	2003	2003
16	222	HAZ	1998	1998
16	222	HAZ	1993	1993
16	222	HAZ	1991	1991

Response to the NMED information request concerning a list of all LANL locations where hazardous waste, mixed waste, and non-hazardous TRU or low level radioactive waste is generated. This list includes sites recorded in WCATS generating waste as of 01-OCT-1979 through the date the query was run (26-JUN-2014.) The information is broken down into columns as follows:
TA = Technical Area
BLDG = Building within the Technical Area
Waste Type = Haz (ardous), MLLW (Mixed Low Level Waste), TRU (Transuranic) and MTRU (Mixed Transuranic.)
First Fiscal Year Generated = Earliest Fiscal Year Generated
Last Fiscal Year Generated = Latest Fiscal Year Generated

TA	BLDG	Waste Type	First Fiscal Year Generated	Last Fiscal Year Generated
16	243	HAZ	1992	1992
16	243	HAZ	1991	1991
16	248	HAZ	1991	1999
16	26	HAZ	1999	2014
16	260	HAZ	1987	2008
16	260	HAZ	2005	2005
16	260	HAZ	1996	1996
16	260	HAZ	2006	2006
16	260	HAZ	2005	2005
16	260	HAZ	2007	2011
16	260	HAZ	2008	2008
16	260	HAZ	2005	2011
16	260	HAZ	2010	2012
16	260	HAZ	1998	2014
16	260	HAZ	2001	2001
16	260	HAZ	2014	2014
16	260	HAZ	2011	2011
16	261	HAZ	2009	2009
16	261	HAZ	2001	2001
16	267	HAZ	2000	2000
16	267	HAZ	1999	2000
16	267	HAZ	2000	2000
16	27	HAZ	1997	1997
16	300	HAZ	1984	1989
16	300	HAZ	2003	2003
16	300	HAZ	1998	1999
16	300	HAZ	2010	2010
16	301	HAZ	2001	2001
16	302	HAZ	1986	1990
16	302	HAZ	2014	2014
16	303	HAZ	2003	2003
16	303	HAZ	2011	2011

Response to the NMED information request concerning a list of all LANL locations where hazardous waste, mixed waste, and non-hazardous TRU or low level radioactive waste is generated. This list includes sites recorded in WCATS generating waste as of 01-OCT-1979 through the date the query was run (26-JUN-2014.) The information is broken down into columns as follows:
TA = Technical Area
BLDG = Building within the Technical Area
Waste Type = Haz (ardous), MLLW (Mixed Low Level Waste), TRU (Transuranic) and MTRU (Mixed Transuranic.)
First Fiscal Year Generated = Earliest Fiscal Year Generated
Last Fiscal Year Generated = Latest Fiscal Year Generated

TA	BLDG	Waste Type	First Fiscal Year Generated	Last Fiscal Year Generated
16	304	HAZ	1991	2006
16	304	HAZ	1991	1991
16	304	HAZ	1992	2006
16	304	HAZ	2009	2009
16	304	HAZ	2003	2006
16	304	HAZ	2001	2006
16	305	HAZ	1983	1991
16	305	HAZ	2009	2010
16	306	HAZ	1991	1991
16	306	HAZ	1985	2008
16	306	HAZ	1996	2004
16	306	HAZ	1998	1999
16	307	HAZ	1997	1997
16	332	HAZ	1998	1999
16	332	HAZ	2010	2010
16	332	HAZ	1998	1998
16	332294	HAZ	1998	1998
16	332294	HAZ	1998	1998
16	339	HAZ	2000	2000
16	340	HAZ	1997	1997
16	340	HAZ	1997	1999
16	340	HAZ	1998	1999
16	340	HAZ	2004	2004
16	342	HAZ	2005	2005
16	360	HAZ	2005	2005
16	360	HAZ	2006	2006
16	360	HAZ	2003	2003
16	370	HAZ	2004	2005
16	370	HAZ	1996	1996
16	384	HAZ	1993	1994
16	386	HAZ	1998	1999
16	386	HAZ	1996	2006

Response to the NMED information request concerning a list of all LANL locations where hazardous waste, mixed waste, and non-hazardous TRU or low level radioactive waste is generated. This list includes sites recorded in WCATS generating waste as of 01-OCT-1979 through the date the query was run (26-JUN-2014.) The information is broken down into columns as follows:
TA = Technical Area
BLDG = Building within the Technical Area
Waste Type = Haz (ardous), MLLW (Mixed Low Level Waste), TRU (Transuranic) and MTRU (Mixed Transuranic.)
First Fiscal Year Generated = Earliest Fiscal Year Generated
Last Fiscal Year Generated = Latest Fiscal Year Generated

TA	BLDG	Waste Type	First Fiscal Year Generated	Last Fiscal Year Generated
16	386	HAZ	1999	2000
16	388	HAZ	2005	2010
16	389	HAZ	2012	2012
16	389	HAZ	1992	1992
16	39	HAZ	2008	2008
16	39	HAZ	2009	2009
16	390	HAZ	2003	2003
16	400	HAZ	1989	1989
16	410	HAZ	1993	1998
16	410	HAZ	1994	2001
16	410	HAZ	2000	2000
16	410	HAZ	1993	2013
16	410	HAZ	2009	2010
16	411	HAZ	2004	2004
16	412	HAZ	1995	1996
16	414	HAZ	1998	1998
16	414	HAZ	1998	1998
16	421	HAZ	1994	1994
16	430	HAZ	1991	2004
16	430	HAZ	1996	1996
16	430	HAZ	1998	2007
16	430	HAZ	2002	2002
16	450	HAZ	2002	2002
16	450	HAZ	1991	2002
16	450	HAZ	2001	2001
16	450	HAZ	1991	1996
16	450	HAZ	1996	1996
16	450	HAZ	2001	2001
16	450	HAZ	2000	2000
16	460	HAZ	1983	2007
16	460	HAZ	1997	2009
16	460	HAZ	2000	2009

Response to the NMED information request concerning a list of all LANL locations where hazardous waste, mixed waste, and non-hazardous TRU or low level radioactive waste is generated. This list includes sites recorded in WCATS generating waste as of 01-OCT-1979 through the date the query was run (26-JUN-2014.) The information is broken down into columns as follows:
TA = Technical Area
BLDG = Building within the Technical Area
Waste Type = Haz (ardous), MLLW (Mixed Low Level Waste), TRU (Transuranic) and MTRU (Mixed Transuranic.)
First Fiscal Year Generated = Earliest Fiscal Year Generated
Last Fiscal Year Generated = Latest Fiscal Year Generated

TA	BLDG	Waste Type	First Fiscal Year Generated	Last Fiscal Year Generated
16	460	HAZ	1998	2009
16	460	HAZ	1999	1999
16	460	HAZ	2007	2007
16	460	HAZ	2009	2009
16	471	HAZ	2006	2006
16	471	HAZ	2006	2006
16	516	HAZ	2006	2006
16	516	HAZ	2006	2006
16	516	HAZ	2006	2006
16	54	HAZ	1990	1996
16	54	HAZ	2003	2003
16	659	HAZ	2009	2009
16	7	HAZ	2004	2004
16	7	HAZ	2000	2003
16	77	HAZ	1993	1993
16	8	HAZ	1999	2003
16	88	HAZ	1990	1991
16	88	HAZ	1993	1993
16	88	HAZ	2009	2014
16	89	HAZ	1996	1996
16	901	HAZ	2001	2001
16	901	HAZ	2002	2007
16	901	HAZ	2001	2001
16	968	HAZ	1998	2001
16	968	HAZ	1999	2004
16	969	HAZ	2011	2013
16	GEN-AREAS	HAZ	1983	2010
16	GEN-AREAS	HAZ	2009	2011
16	GEN-AREAS	HAZ	1999	2002
16	GEN-AREAS	HAZ	2007	2008
16	GEN-AREAS	HAZ	2000	2009
16	GEN-AREAS	HAZ	2000	2000

Response to the NMED information request concerning a list of all LANL locations where hazardous waste, mixed waste, and non-hazardous TRU or low level radioactive waste is generated. This list includes sites recorded in WCATS generating waste as of 01-OCT-1979 through the date the query was run (26-JUN-2014.) The information is broken down into columns as follows:
TA = Technical Area
BLDG = Building within the Technical Area
Waste Type = Haz (ardous), MLLW (Mixed Low Level Waste), TRU (Transuranic) and MTRU (Mixed Transuranic.)
First Fiscal Year Generated = Earliest Fiscal Year Generated
Last Fiscal Year Generated = Latest Fiscal Year Generated

TA	BLDG	Waste Type	First Fiscal Year Generated	Last Fiscal Year Generated
16	GEN-AREAS	HAZ	2010	2011
17	GEN-AREAS	HAZ	2008	2008
18	1	HAZ	2003	2003
18	127	HAZ	1998	2001
18	127	HAZ	1998	2001
18	127	HAZ	1998	2001
18	129	HAZ	1983	1986
18	141	HAZ	1983	1992
18	23	HAZ	1998	1998
18	23	HAZ	1998	1998
18	250	HAZ	2000	2001
18	28	HAZ	1990	2003
18	28	HAZ	1995	1999
18	28	HAZ	1993	1994
18	30	HAZ	1986	2001
18	30	HAZ	1999	1999
18	30	HAZ	1998	1998
18	30	HAZ	2010	2010
18	31	HAZ	1996	1996
18	31	HAZ	1996	1996
18	32	HAZ	2003	2003
18	32	HAZ	1999	2003
18	32	HAZ	2012	2012
18	40	HAZ	1995	1995
18	91	HAZ	2010	2010
18	GEN-AREAS	HAZ	1998	1998
18	GEN-AREAS	HAZ	1986	2003
18	GEN-AREAS	HAZ	1998	1998
20	2	HAZ	1997	1997
21	1002	HAZ	1993	1993
21	1002	HAZ	1998	1998
21	1002	HAZ	1995	1996

Response to the NMED information request concerning a list of all LANL locations where hazardous waste, mixed waste, and non-hazardous TRU or low level radioactive waste is generated. This list includes sites recorded in WCATS generating waste as of 01-OCT-1979 through the date the query was run (26-JUN-2014.) The information is broken down into columns as follows:
TA = Technical Area
BLDG = Building within the Technical Area
Waste Type = Haz (ardous), MLLW (Mixed Low Level Waste), TRU (Transuranic) and MTRU (Mixed Transuranic.)
First Fiscal Year Generated = Earliest Fiscal Year Generated
Last Fiscal Year Generated = Latest Fiscal Year Generated

TA	BLDG	Waste Type	First Fiscal Year Generated	Last Fiscal Year Generated
21	1002	HAZ	1995	1995
21	1002	HAZ	1996	2000
21	1002	HAZ	1995	1995
21	1002	HAZ	1993	1993
21	114	HAZ	1991	1991
21	1237	HAZ	1996	1996
21	14	HAZ	1992	1993
21	150	HAZ	1985	1997
21	150	HAZ	1997	1997
21	150	HAZ	1992	1995
21	150	HAZ	1993	1998
21	150	HAZ	1994	1994
21	150	HAZ	1997	1998
21	150	HAZ	1994	1998
21	150	HAZ	1991	2004
21	150	HAZ	1997	1997
21	150	HAZ	1991	1998
21	150	HAZ	1992	1998
21	150	HAZ	1995	2003
21	150	HAZ	1995	1995
21	150	HAZ	1997	1997
21	1509	HAZ	1996	1997
21	152	HAZ	1990	1992
21	152	HAZ	1991	1992
21	152	HAZ	1997	1998
21	152	HAZ	1996	1997
21	152	HAZ	1996	1996
21	152	HAZ	1996	1996
21	152	HAZ	1991	1992
21	155	HAZ	2001	2001
21	155	HAZ	2002	2002
21	155	HAZ	2000	2000

Response to the NMED information request concerning a list of all LANL locations where hazardous waste, mixed waste, and non-hazardous TRU or low level radioactive waste is generated. This list includes sites recorded in WCATS generating waste as of 01-OCT-1979 through the date the query was run (26-JUN-2014.) The information is broken down into columns as follows:
TA = Technical Area
BLDG = Building within the Technical Area
Waste Type = Haz (ardous), MLLW (Mixed Low Level Waste), TRU (Transuranic) and MTRU (Mixed Transuranic.)
First Fiscal Year Generated = Earliest Fiscal Year Generated
Last Fiscal Year Generated = Latest Fiscal Year Generated

TA	BLDG	Waste Type	First Fiscal Year Generated	Last Fiscal Year Generated
21	155	HAZ	1993	1993
21	155	HAZ	2003	2003
21	155	HAZ	1992	1992
21	155	HAZ	1992	1999
21	155	HAZ	2001	2002
21	2	HAZ	1993	1998
21	2	HAZ	1993	1997
21	2	HAZ	1995	1995
21	2	HAZ	1995	1995
21	2	HAZ	1993	1995
21	2	HAZ	1992	1992
21	2	HAZ	1997	1998
21	2	HAZ	1995	1995
21	2	HAZ	1993	1994
21	2	HAZ	1997	1997
21	205	HAZ	1999	1999
21	205	HAZ	1999	1999
21	209	HAZ	1983	2003
21	209	HAZ	1996	1997
21	209	HAZ	1998	2004
21	209	HAZ	1998	1998
21	209	HAZ	2005	2006
21	209	HAZ	1994	1995
21	21	HAZ	1996	1996
21	21	HAZ	1997	1997
21	210	HAZ	1996	1996
21	210	HAZ	2000	2003
21	210	HAZ	1991	1991
21	210	HAZ	2002	2004
21	210	HAZ	1998	2007
21	210	HAZ	1998	1998
21	212	HAZ	1994	2002

Response to the NMED information request concerning a list of all LANL locations where hazardous waste, mixed waste, and non-hazardous TRU or low level radioactive waste is generated. This list includes sites recorded in WCATS generating waste as of 01-OCT-1979 through the date the query was run (26-JUN-2014.) The information is broken down into columns as follows:
TA = Technical Area
BLDG = Building within the Technical Area
Waste Type = Haz (ardous), MLLW (Mixed Low Level Waste), TRU (Transuranic) and MTRU (Mixed Transuranic.)
First Fiscal Year Generated = Earliest Fiscal Year Generated
Last Fiscal Year Generated = Latest Fiscal Year Generated

TA	BLDG	Waste Type	First Fiscal Year Generated	Last Fiscal Year Generated
21	212	HAZ	1991	1992
21	228	HAZ	2001	2001
21	257	HAZ	2010	2010
21	286	HAZ	1990	1997
21	2N	HAZ	1994	1994
21	3	HAZ	1996	1997
21	3	HAZ	1992	1995
21	3	HAZ	1992	1997
21	3	HAZ	1995	1995
21	3	HAZ	1996	1996
21	3	HAZ	1993	1995
21	3	HAZ	1994	1994
21	3	HAZ	1994	1994
21	3	HAZ	1994	1995
21	3	HAZ	1992	1992
21	3	HAZ	1992	1994
21	3	HAZ	1992	1993
21	3	HAZ	1991	1997
21	3	HAZ	1992	1994
21	30	HAZ	1992	1992
21	30	HAZ	1991	1997
21	30	HAZ	1996	1996
21	30	HAZ	1995	1997
21	31	HAZ	1983	2008
21	31	HAZ	1997	1998
21	31	HAZ	1993	1994
21	31	HAZ	2008	2008
21	315	HAZ	1997	1997
21	315	HAZ	1993	1994
21	357	HAZ	1993	1993
21	38	HAZ	1999	2006
21	382	HAZ	1991	1991

Response to the NMED information request concerning a list of all LANL locations where hazardous waste, mixed waste, and non-hazardous TRU or low level radioactive waste is generated. This list includes sites recorded in WCATS generating waste as of 01-OCT-1979 through the date the query was run (26-JUN-2014.) The information is broken down into columns as follows:
TA = Technical Area
BLDG = Building within the Technical Area
Waste Type = Haz (ardous), MLLW (Mixed Low Level Waste), TRU (Transuranic) and MTRU (Mixed Transuranic.)
First Fiscal Year Generated = Earliest Fiscal Year Generated
Last Fiscal Year Generated = Latest Fiscal Year Generated

TA	BLDG	Waste Type	First Fiscal Year Generated	Last Fiscal Year Generated
21	396	HAZ	1996	1996
21	3N	HAZ	1993	1994
21	3N	HAZ	1993	1994
21	3N	HAZ	1994	1994
21	3N	HAZ	1992	1992
21	3N	HAZ	1994	1994
21	4	HAZ	1994	1994
21	4	HAZ	1994	1994
21	4	HAZ	1991	1994
21	4	HAZ	1991	1991
21	405	HAZ	1992	1992
21	41	HAZ	1995	1996
21	427	HAZ	1993	1999
21	43	HAZ	1993	1993
21	5	HAZ	1989	1997
21	5	HAZ	1997	1997
21	5	HAZ	1997	1998
21	5	HAZ	1997	1997
21	5	HAZ	1997	1997
21	5	HAZ	1992	1998
21	5	HAZ	1991	1998
21	5	HAZ	1997	1997
21	5	HAZ	1997	1997
21	5	HAZ	1997	1997
21	5	HAZ	1997	1997
21	5	HAZ	1997	1997
21	5	HAZ	1991	1992
21	5	HAZ	1997	1997
21	51	HAZ	1991	1991
21	61	HAZ	1998	1998
21	61	HAZ	1997	1998
21	8	HAZ	2002	2003

Response to the NMED information request concerning a list of all LANL locations where hazardous waste, mixed waste, and non-hazardous TRU or low level radioactive waste is generated. This list includes sites recorded in WCATS generating waste as of 01-OCT-1979 through the date the query was run (26-JUN-2014.) The information is broken down into columns as follows:
TA = Technical Area
BLDG = Building within the Technical Area
Waste Type = Haz (ardous), MLLW (Mixed Low Level Waste), TRU (Transuranic) and MTRU (Mixed Transuranic.)
First Fiscal Year Generated = Earliest Fiscal Year Generated
Last Fiscal Year Generated = Latest Fiscal Year Generated

TA	BLDG	Waste Type	First Fiscal Year Generated	Last Fiscal Year Generated
21	85	HAZ	2001	2001
21	901	HAZ	2002	2003
21	GEN-AREAS	HAZ	1997	1997
21	GEN-AREAS	HAZ	1983	2003
21	GEN-AREAS	HAZ	2009	2011
21	GEN-AREAS	HAZ	2000	2001
21	L90-05779	HAZ	2012	2012
21	L90-05779	HAZ	2012	2012
22	1	HAZ	2003	2003
22	203	HAZ	2003	2003
22	22	HAZ	1993	1993
22	22	HAZ	2012	2012
22	22	HAZ	1995	1996
22	273	HAZ	2003	2003
22	312	HAZ	2003	2003
22	34	HAZ	1984	1984
22	34	HAZ	1999	2000
22	34	HAZ	2001	2001
22	39	HAZ	2009	2009
22	5	HAZ	1987	1996
22	5	HAZ	1992	1992
22	5	HAZ	2014	2014
22	52	HAZ	1983	2013
22	52	HAZ	1997	1997
22	52	HAZ	1991	1991
22	52	HAZ	2002	2002
22	7	HAZ	2003	2003
22	90	HAZ	1985	1991
22	91	HAZ	1987	2013
22	91	HAZ	2000	2000
22	91	HAZ	1999	2002
22	91	HAZ	1993	1997

Response to the NMED information request concerning a list of all LANL locations where hazardous waste, mixed waste, and non-hazardous TRU or low level radioactive waste is generated. This list includes sites recorded in WCATS generating waste as of 01-OCT-1979 through the date the query was run (26-JUN-2014.) The information is broken down into columns as follows:
TA = Technical Area
BLDG = Building within the Technical Area
Waste Type = Haz (ardous), MLLW (Mixed Low Level Waste), TRU (Transuranic) and MTRU (Mixed Transuranic.)
First Fiscal Year Generated = Earliest Fiscal Year Generated
Last Fiscal Year Generated = Latest Fiscal Year Generated

TA	BLDG	Waste Type	First Fiscal Year Generated	Last Fiscal Year Generated
22	91	HAZ	2007	2007
22	91	HAZ	1996	2007
22	91	HAZ	2007	2007
22	91	HAZ	2008	2008
22	91	HAZ	1993	2014
22	91	HAZ	1999	1999
22	91	HAZ	1992	2007
22	91	HAZ	1998	2014
22	91	HAZ	1994	2000
22	91	HAZ	2011	2011
22	91	HAZ	2012	2014
22	91	HAZ	2013	2013
22	92	HAZ	1984	1984
22	93	HAZ	1987	1987
22	93	HAZ	2002	2005
22	93	HAZ	2014	2014
22	95	HAZ	1991	1993
22	95	HAZ	1994	2005
22	95	HAZ	2012	2012
22	95	HAZ	2009	2010
22	96	HAZ	2002	2002
22	GEN-AREAS	HAZ	1988	1993
22	GEN-AREAS	HAZ	2009	2009
25	150	HAZ	1997	1997
26	39	HAZ	2008	2008
26	GEN-AREAS	HAZ	2008	2008
27	GEN-AREAS	HAZ	1998	1998
28	2	HAZ	2008	2008
28	GEN-AREAS	HAZ	2008	2008
30	213	HAZ	1991	1991
30	30	HAZ	1996	1996
31	1819	HAZ	1998	1998

Response to the NMED information request concerning a list of all LANL locations where hazardous waste, mixed waste, and non-hazardous TRU or low level radioactive waste is generated. This list includes sites recorded in WCATS generating waste as of 01-OCT-1979 through the date the query was run (26-JUN-2014.) The information is broken down into columns as follows:
TA = Technical Area
BLDG = Building within the Technical Area
Waste Type = Haz (ardous), MLLW (Mixed Low Level Waste), TRU (Transuranic) and MTRU (Mixed Transuranic.)
First Fiscal Year Generated = Earliest Fiscal Year Generated
Last Fiscal Year Generated = Latest Fiscal Year Generated

TA	BLDG	Waste Type	First Fiscal Year Generated	Last Fiscal Year Generated
31	40	HAZ	1999	1999
31	GEN-AREAS	HAZ	2008	2008
32	GEN-AREAS	HAZ	2007	2007
32	GEN-AREAS	HAZ	2008	2008
33	1	HAZ	1992	1992
33	113	HAZ	1990	1991
33	114	HAZ	1986	1996
33	114	HAZ	1998	1998
33	114	HAZ	1996	1997
33	114	HAZ	1996	1996
33	16	HAZ	2005	2005
33	19	HAZ	1992	1992
33	19	HAZ	2009	2009
33	20	HAZ	1983	1983
33	22	HAZ	2007	2007
33	22	HAZ	2007	2007
33	22	HAZ	2009	2009
33	23	HAZ	1996	1997
33	23	HAZ	1996	1996
33	23	HAZ	2010	2010
33	24	HAZ	1990	1998
33	24	HAZ	1991	1991
33	25	HAZ	1990	2004
33	33	HAZ	1995	1995
33	33	HAZ	1995	1995
33	33	HAZ	1997	1997
33	39	HAZ	1988	1989
33	390	HAZ	2003	2003
33	6	HAZ	1997	1997
33	86	HAZ	1998	1998
33	86	HAZ	1999	2002
33	86	HAZ	2003	2003

Response to the NMED information request concerning a list of all LANL locations where hazardous waste, mixed waste, and non-hazardous TRU or low level radioactive waste is generated. This list includes sites recorded in WCATS generating waste as of 01-OCT-1979 through the date the query was run (26-JUN-2014.) The information is broken down into columns as follows:
TA = Technical Area
BLDG = Building within the Technical Area
Waste Type = Haz (ardous), MLLW (Mixed Low Level Waste), TRU (Transuranic) and MTRU (Mixed Transuranic.)
First Fiscal Year Generated = Earliest Fiscal Year Generated
Last Fiscal Year Generated = Latest Fiscal Year Generated

TA	BLDG	Waste Type	First Fiscal Year Generated	Last Fiscal Year Generated
33	86	HAZ	1998	2003
33	86	HAZ	1993	1993
33	901	HAZ	2002	2002
33	GEN-AREAS	HAZ	1988	2008
35	1	HAZ	2002	2004
35	1	HAZ	2003	2007
35	1	HAZ	2001	2004
35	1	HAZ	2004	2004
35	1	HAZ	2004	2004
35	1	HAZ	2004	2004
35	1	HAZ	2004	2004
35	1	HAZ	2003	2005
35	1009	HAZ	2003	2003
35	107	HAZ	2005	2005
35	107	HAZ	2004	2005
35	114	HAZ	1998	1998
35	115	HAZ	1992	1997
35	115	HAZ	1997	1997
35	1237	HAZ	1997	1998
35	124	HAZ	2013	2013
35	124	HAZ	2004	2011
35	124	HAZ	2007	2007
35	124	HAZ	2000	2014
35	124	HAZ	2004	2004
35	124	HAZ	2011	2013
35	124	HAZ	2008	2011
35	124	HAZ	2003	2003
35	124	HAZ	2013	2013
35	125	HAZ	1984	2000
35	125	HAZ	1996	1999
35	125	HAZ	1994	1994
35	125	HAZ	2002	2002

Response to the NMED information request concerning a list of all LANL locations where hazardous waste, mixed waste, and non-hazardous TRU or low level radioactive waste is generated. This list includes sites recorded in WCATS generating waste as of 01-OCT-1979 through the date the query was run (26-JUN-2014.) The information is broken down into columns as follows:
TA = Technical Area
BLDG = Building within the Technical Area
Waste Type = Haz (ardous), MLLW (Mixed Low Level Waste), TRU (Transuranic) and MTRU (Mixed Transuranic.)
First Fiscal Year Generated = Earliest Fiscal Year Generated
Last Fiscal Year Generated = Latest Fiscal Year Generated

TA	BLDG	Waste Type	First Fiscal Year Generated	Last Fiscal Year Generated
35	125	HAZ	1993	1993
35	125	HAZ	1994	2000
35	125	HAZ	1995	1996
35	125	HAZ	1998	1998
35	125	HAZ	2014	2014
35	125	HAZ	1999	1999
35	125	HAZ	1999	1999
35	125	HAZ	1994	1994
35	125	HAZ	2007	2013
35	125	HAZ	2006	2014
35	125	HAZ	2001	2003
35	125	HAZ	1994	1999
35	125	HAZ	1991	1991
35	125	HAZ	2010	2013
35	125	HAZ	1991	1992
35	126	HAZ	1998	1998
35	127	HAZ	1996	1996
35	128	HAZ	1991	1998
35	128	HAZ	1994	1995
35	128	HAZ	1996	1996
35	128	HAZ	1994	1996
35	128	HAZ	2001	2001
35	128	HAZ	1997	1998
35	128	HAZ	2013	2013
35	128	HAZ	1991	1991
35	150	HAZ	2000	2004
35	150	HAZ	1995	1995
35	154	HAZ	1991	1991
35	154	HAZ	2004	2004
35	154	HAZ	2004	2004
35	1746	HAZ	1994	1994
35	186	HAZ	1992	1992

Response to the NMED information request concerning a list of all LANL locations where hazardous waste, mixed waste, and non-hazardous TRU or low level radioactive waste is generated. This list includes sites recorded in WCATS generating waste as of 01-OCT-1979 through the date the query was run (26-JUN-2014.) The information is broken down into columns as follows:
TA = Technical Area
BLDG = Building within the Technical Area
Waste Type = Haz (ardous), MLLW (Mixed Low Level Waste), TRU (Transuranic) and MTRU (Mixed Transuranic.)
First Fiscal Year Generated = Earliest Fiscal Year Generated
Last Fiscal Year Generated = Latest Fiscal Year Generated

TA	BLDG	Waste Type	First Fiscal Year Generated	Last Fiscal Year Generated
35	186	HAZ	1984	1992
35	186	HAZ	1993	1993
35	1861	HAZ	1992	1992
35	188	HAZ	1991	1991
35	189	HAZ	1991	1996
35	189	HAZ	1997	2014
35	189	HAZ	1996	1996
35	189	HAZ	1996	1996
35	189	HAZ	1999	2011
35	189	HAZ	1996	2002
35	189	HAZ	2009	2011
35	189	HAZ	2013	2013
35	2	HAZ	1983	2009
35	2	HAZ	1991	1994
35	2	HAZ	2001	2001
35	2	HAZ	1992	1992
35	2	HAZ	1991	1991
35	2	HAZ	1999	1999
35	2	HAZ	1995	1995
35	2	HAZ	1998	1998
35	2	HAZ	1991	1992
35	2	HAZ	1994	2002
35	2	HAZ	1991	1991
35	2	HAZ	1993	1994
35	2	HAZ	1999	2001
35	2	HAZ	1993	1993
35	2	HAZ	1991	2013
35	2	HAZ	1991	1994
35	2	HAZ	1992	1995
35	2	HAZ	1995	1995
35	2	HAZ	1992	1992
35	2	HAZ	1991	2003

Response to the NMED information request concerning a list of all LANL locations where hazardous waste, mixed waste, and non-hazardous TRU or low level radioactive waste is generated. This list includes sites recorded in WCATS generating waste as of 01-OCT-1979 through the date the query was run (26-JUN-2014.) The information is broken down into columns as follows:
TA = Technical Area
BLDG = Building within the Technical Area
Waste Type = Haz (ardous), MLLW (Mixed Low Level Waste), TRU (Transuranic) and MTRU (Mixed Transuranic.)
First Fiscal Year Generated = Earliest Fiscal Year Generated
Last Fiscal Year Generated = Latest Fiscal Year Generated

TA	BLDG	Waste Type	First Fiscal Year Generated	Last Fiscal Year Generated
35	2	HAZ	1996	2001
35	2	HAZ	2003	2007
35	2	HAZ	2004	2004
35	2	HAZ	1991	1995
35	2	HAZ	1992	1992
35	2	HAZ	1993	1993
35	2	HAZ	1993	1993
35	2	HAZ	1993	2000
35	2	HAZ	1994	2001
35	2	HAZ	2008	2008
35	2	HAZ	2001	2008
35	2	HAZ	1999	1999
35	2	HAZ	1999	1999
35	2	HAZ	1992	2005
35	2	HAZ	2008	2014
35	207	HAZ	1987	1991
35	213	HAZ	2009	2010
35	213	HAZ	1985	2012
35	213	HAZ	1996	2006
35	213	HAZ	1996	1997
35	213	HAZ	1996	1996
35	213	HAZ	1992	1992
35	213	HAZ	1994	1994
35	213	HAZ	1994	1994
35	213	HAZ	1992	2000
35	213	HAZ	1992	2003
35	213	HAZ	1992	1992
35	213	HAZ	1996	2005
35	213	HAZ	1992	1994
35	213	HAZ	1992	1992
35	213	HAZ	1993	1997
35	213	HAZ	1992	1992

Response to the NMED information request concerning a list of all LANL locations where hazardous waste, mixed waste, and non-hazardous TRU or low level radioactive waste is generated. This list includes sites recorded in WCATS generating waste as of 01-OCT-1979 through the date the query was run (26-JUN-2014.) The information is broken down into columns as follows:
TA = Technical Area
BLDG = Building within the Technical Area
Waste Type = Haz (ardous), MLLW (Mixed Low Level Waste), TRU (Transuranic) and MTRU (Mixed Transuranic.)
First Fiscal Year Generated = Earliest Fiscal Year Generated
Last Fiscal Year Generated = Latest Fiscal Year Generated

TA	BLDG	Waste Type	First Fiscal Year Generated	Last Fiscal Year Generated
35	213	HAZ	1996	2000
35	213	HAZ	1992	1992
35	213	HAZ	1992	1992
35	213	HAZ	1993	1995
35	213	HAZ	1992	1992
35	213	HAZ	1992	2009
35	213	HAZ	1994	2004
35	213	HAZ	2004	2005
35	213	HAZ	2008	2008
35	213	HAZ	1997	2007
35	213	HAZ	1999	1999
35	213	HAZ	2009	2011
35	213	HAZ	1992	1992
35	213	HAZ	1992	1992
35	213	HAZ	1992	1995
35	213	HAZ	1999	2006
35	213	HAZ	2004	2004
35	213	HAZ	2005	2005
35	213	HAZ	1991	2013
35	213	HAZ	2009	2011
35	213	HAZ	1991	2013
35	213	HAZ	1993	1999
35	213	HAZ	2013	2014
35	213	HAZ	2000	2014
35	213	HAZ	2013	2013
35	213	HAZ	1992	1992
35	213	HAZ	2009	2010
35	213	HAZ	1992	1994
35	213	HAZ	1992	2013
35	213	HAZ	2010	2011
35	213	HAZ	1992	2013
35	213	HAZ	1991	1991

Response to the NMED information request concerning a list of all LANL locations where hazardous waste, mixed waste, and non-hazardous TRU or low level radioactive waste is generated. This list includes sites recorded in WCATS generating waste as of 01-OCT-1979 through the date the query was run (26-JUN-2014.) The information is broken down into columns as follows:
TA = Technical Area
BLDG = Building within the Technical Area
Waste Type = Haz (ardous), MLLW (Mixed Low Level Waste), TRU (Transuranic) and MTRU (Mixed Transuranic.)
First Fiscal Year Generated = Earliest Fiscal Year Generated
Last Fiscal Year Generated = Latest Fiscal Year Generated

TA	BLDG	Waste Type	First Fiscal Year Generated	Last Fiscal Year Generated
35	213	HAZ	1991	2012
35	213	HAZ	1997	2013
35	213	HAZ	1994	1995
35	213	HAZ	1992	2006
35	213	HAZ	1991	1991
35	213	HAZ	1991	1991
35	213	HAZ	1992	1992
35	213	HAZ	1993	1993
35	213	HAZ	1994	1994
35	213	HAZ	1993	1993
35	213	HAZ	2002	2013
35	213	HAZ	1993	1994
35	213	HAZ	1997	2005
35	213	HAZ	1991	1991
35	213	HAZ	2002	2002
35	213	HAZ	1997	2006
35	213	HAZ	1991	2002
35	213	HAZ	1993	2011
35	213	HAZ	1991	2011
35	213	HAZ	1991	2014
35	213	HAZ	1993	1993
35	213	HAZ	1998	2005
35	213	HAZ	1996	2005
35	213	HAZ	2013	2013
35	213	HAZ	1991	1992
35	213	HAZ	2009	2011
35	213	HAZ	2001	2001
35	2133	HAZ	1992	1994
35	25	HAZ	1993	2009
35	25	HAZ	2009	2009
35	25	HAZ	2009	2009
35	250	HAZ	2004	2004

Response to the NMED information request concerning a list of all LANL locations where hazardous waste, mixed waste, and non-hazardous TRU or low level radioactive waste is generated. This list includes sites recorded in WCATS generating waste as of 01-OCT-1979 through the date the query was run (26-JUN-2014.) The information is broken down into columns as follows:
TA = Technical Area
BLDG = Building within the Technical Area
Waste Type = Haz (ardous), MLLW (Mixed Low Level Waste), TRU (Transuranic) and MTRU (Mixed Transuranic.)
First Fiscal Year Generated = Earliest Fiscal Year Generated
Last Fiscal Year Generated = Latest Fiscal Year Generated

TA	BLDG	Waste Type	First Fiscal Year Generated	Last Fiscal Year Generated
35	255	HAZ	1995	1995
35	255	HAZ	1991	1991
35	261	HAZ	1996	1996
35	27	HAZ	1989	1998
35	27	HAZ	2011	2011
35	271	HAZ	2005	2005
35	29	HAZ	2009	2009
35	29	HAZ	2001	2003
35	29	HAZ	2009	2009
35	29	HAZ	2004	2004
35	29	HAZ	2003	2003
35	294	HAZ	1991	1992
35	3	HAZ	2001	2001
35	3	HAZ	2004	2004
35	3	HAZ	2004	2004
35	3	HAZ	2004	2004
35	34	HAZ	1998	1998
35	34	HAZ	1993	1998
35	34	HAZ	1994	1998
35	34	HAZ	2011	2011
35	34	HAZ	2011	2013
35	35	HAZ	1993	1993
35	359	HAZ	1997	1997
35	386	HAZ	2007	2007
35	386	HAZ	2007	2007
35	386	HAZ	2010	2010
35	39	HAZ	2010	2010
35	39	HAZ	2004	2004
35	421	HAZ	1996	1999
35	421	HAZ	1999	1999
35	421	HAZ	1995	2014
35	421	HAZ	1999	1999

Response to the NMED information request concerning a list of all LANL locations where hazardous waste, mixed waste, and non-hazardous TRU or low level radioactive waste is generated. This list includes sites recorded in WCATS generating waste as of 01-OCT-1979 through the date the query was run (26-JUN-2014.) The information is broken down into columns as follows:
TA = Technical Area
BLDG = Building within the Technical Area
Waste Type = Haz (ardous), MLLW (Mixed Low Level Waste), TRU (Transuranic) and MTRU (Mixed Transuranic.)
First Fiscal Year Generated = Earliest Fiscal Year Generated
Last Fiscal Year Generated = Latest Fiscal Year Generated

TA	BLDG	Waste Type	First Fiscal Year Generated	Last Fiscal Year Generated
35	421	HAZ	1998	1998
35	455	HAZ	1996	2001
35	455	HAZ	1997	2013
35	455	HAZ	2010	2011
35	458	HAZ	1996	2001
35	458	HAZ	2013	2013
35	46	HAZ	1990	1990
35	46	HAZ	1995	1998
35	47	HAZ	1998	2004
35	47	HAZ	1998	1998
35	5	HAZ	2001	2001
35	5	HAZ	2004	2004
35	502	HAZ	2005	2005
35	502	HAZ	1996	1996
35	54	HAZ	2001	2001
35	621	HAZ	2004	2004
35	659	HAZ	2009	2009
35	66	HAZ	1999	2001
35	67	HAZ	1988	1996
35	67	HAZ	2011	2011
35	713	HAZ	1992	1992
35	8	HAZ	2001	2001
35	85	HAZ	2007	2010
35	85	HAZ	1983	2013
35	85	HAZ	2003	2003
35	85	HAZ	2006	2006
35	85	HAZ	1992	1994
35	85	HAZ	1994	1994
35	85	HAZ	2002	2009
35	85	HAZ	1993	1995
35	85	HAZ	1998	2014
35	85	HAZ	2005	2005

Response to the NMED information request concerning a list of all LANL locations where hazardous waste, mixed waste, and non-hazardous TRU or low level radioactive waste is generated. This list includes sites recorded in WCATS generating waste as of 01-OCT-1979 through the date the query was run (26-JUN-2014.) The information is broken down into columns as follows:
TA = Technical Area
BLDG = Building within the Technical Area
Waste Type = Haz (ardous), MLLW (Mixed Low Level Waste), TRU (Transuranic) and MTRU (Mixed Transuranic.)
First Fiscal Year Generated = Earliest Fiscal Year Generated
Last Fiscal Year Generated = Latest Fiscal Year Generated

TA	BLDG	Waste Type	First Fiscal Year Generated	Last Fiscal Year Generated
35	85	HAZ	1998	2013
35	85	HAZ	2004	2080
35	85	HAZ	1999	2014
35	85	HAZ	2011	2012
35	85	HAZ	2013	2013
35	85	HAZ	2004	2004
35	85	HAZ	2005	2013
35	85	HAZ	2002	2002
35	85	HAZ	1999	2014
35	85	HAZ	2000	2000
35	85	HAZ	2001	2001
35	85	HAZ	2001	2002
35	85	HAZ	2000	2003
35	85	HAZ	2001	2010
35	85	HAZ	2009	2013
35	86	HAZ	1988	2002
35	86	HAZ	1998	2000
35	86	HAZ	2001	2001
35	86	HAZ	2001	2001
35	86	HAZ	2013	2013
35	86	HAZ	2007	2007
35	87	HAZ	1984	2000
35	87	HAZ	2002	2008
35	87	HAZ	2000	2000
35	87	HAZ	1992	2013
35	87	HAZ	2013	2013
35	87	HAZ	1993	1993
35	87	HAZ	2009	2009
35	GEN-AREAS	HAZ	2001	2005
35	GEN-AREAS	HAZ	1983	2005
36	1	HAZ	1988	1992
36	1	HAZ	1992	1993

Response to the NMED information request concerning a list of all LANL locations where hazardous waste, mixed waste, and non-hazardous TRU or low level radioactive waste is generated. This list includes sites recorded in WCATS generating waste as of 01-OCT-1979 through the date the query was run (26-JUN-2014.) The information is broken down into columns as follows:
TA = Technical Area
BLDG = Building within the Technical Area
Waste Type = Haz (ardous), MLLW (Mixed Low Level Waste), TRU (Transuranic) and MTRU (Mixed Transuranic.)
First Fiscal Year Generated = Earliest Fiscal Year Generated
Last Fiscal Year Generated = Latest Fiscal Year Generated

TA	BLDG	Waste Type	First Fiscal Year Generated	Last Fiscal Year Generated
36	1	HAZ	1999	1999
36	104	HAZ	2006	2006
36	104	HAZ	2006	2006
36	107	HAZ	1999	2003
36	125	HAZ	1991	1992
36	125	HAZ	1990	1998
36	131	HAZ	1998	1998
36	17	HAZ	1995	1995
36	183	HAZ	1995	1995
36	213	HAZ	1991	1991
36	22	HAZ	2010	2010
36	22	HAZ	2011	2011
36	260	HAZ	2014	2014
36	312	HAZ	2010	2010
36	312	HAZ	2011	2011
36	312	HAZ	2009	2012
36	41	HAZ	2010	2010
36	48	HAZ	2009	2010
36	48	HAZ	2009	2014
36	48	HAZ	2014	2014
36	48	HAZ	2009	2012
36	48	HAZ	2009	2012
36	48	HAZ	2009	2014
36	48	HAZ	2010	2010
36	5	HAZ	1998	1998
36	5	HAZ	2009	2011
36	534	HAZ	2011	2011
36	6	HAZ	2001	2001
36	7	HAZ	1998	2003
36	7	HAZ	2013	2013
36	8	HAZ	2014	2014
36	8	HAZ	2009	2009

Response to the NMED information request concerning a list of all LANL locations where hazardous waste, mixed waste, and non-hazardous TRU or low level radioactive waste is generated. This list includes sites recorded in WCATS generating waste as of 01-OCT-1979 through the date the query was run (26-JUN-2014.) The information is broken down into columns as follows:
TA = Technical Area
BLDG = Building within the Technical Area
Waste Type = Haz (ardous), MLLW (Mixed Low Level Waste), TRU (Transuranic) and MTRU (Mixed Transuranic.)
First Fiscal Year Generated = Earliest Fiscal Year Generated
Last Fiscal Year Generated = Latest Fiscal Year Generated

TA	BLDG	Waste Type	First Fiscal Year Generated	Last Fiscal Year Generated
36	83	HAZ	2007	2007
36	86	HAZ	1996	1998
36	91	HAZ	2010	2011
36	91	HAZ	2009	2012
36	91	HAZ	2011	2011
36	GEN-AREAS	HAZ	1987	2003
36	GEN-AREAS	HAZ	1998	1998
36	GEN-AREAS	HAZ	1996	1996
36	L90-03916	HAZ	2010	2011
36	L90-03916	HAZ	2010	2012
36	L90-03916	HAZ	2009	2012
36	UWA-03903	HAZ	2009	2009
37	12	HAZ	2007	2007
37	14	HAZ	2011	2011
37	5	HAZ	2007	2007
37	8	HAZ	2005	2005
37	8	HAZ	2000	2006
37	8	HAZ	1999	2003
37	GEN-AREAS	HAZ	1990	1992
38	38	HAZ	1999	1999
39	100	HAZ	2010	2010
39	111	HAZ	1991	1993
39	111	HAZ	1994	1994
39	12	HAZ	2000	2000
39	141	HAZ	1993	1993
39	142	HAZ	1997	1997
39	142	HAZ	1997	1997
39	142	HAZ	1998	1998
39	182	HAZ	2010	2010
39	2	HAZ	1987	1999
39	2	HAZ	1998	2003
39	2	HAZ	2003	2003

Response to the NMED information request concerning a list of all LANL locations where hazardous waste, mixed waste, and non-hazardous TRU or low level radioactive waste is generated. This list includes sites recorded in WCATS generating waste as of 01-OCT-1979 through the date the query was run (26-JUN-2014.) The information is broken down into columns as follows:
TA = Technical Area
BLDG = Building within the Technical Area
Waste Type = Haz (ardous), MLLW (Mixed Low Level Waste), TRU (Transuranic) and MTRU (Mixed Transuranic.)
First Fiscal Year Generated = Earliest Fiscal Year Generated
Last Fiscal Year Generated = Latest Fiscal Year Generated

TA	BLDG	Waste Type	First Fiscal Year Generated	Last Fiscal Year Generated
39	2	HAZ	1992	2005
39	2	HAZ	1998	2001
39	2	HAZ	2005	2005
39	2	HAZ	2010	2012
39	2	HAZ	1992	1993
39	2	HAZ	2010	2012
39	2	HAZ	2003	2003
39	2	HAZ	1993	1993
39	2	HAZ	2008	2008
39	2	HAZ	2013	2014
39	2	HAZ	1994	1994
39	4	HAZ	2008	2008
39	56	HAZ	1987	1987
39	57	HAZ	1991	1992
39	57	HAZ	1992	1992
39	6	HAZ	2003	2009
39	6	HAZ	2003	2003
39	6	HAZ	2012	2012
39	62	HAZ	2010	2010
39	62	HAZ	1983	2011
39	62	HAZ	2009	2009
39	63	HAZ	1994	1994
39	63	HAZ	1994	1994
39	69	HAZ	2008	2008
39	69	HAZ	2008	2009
39	69	HAZ	1990	2013
39	69	HAZ	2013	2013
39	69	HAZ	1991	1992
39	69	HAZ	1992	2008
39	69	HAZ	2013	2013
39	88	HAZ	2010	2010
39	89	HAZ	2003	2006

Response to the NMED information request concerning a list of all LANL locations where hazardous waste, mixed waste, and non-hazardous TRU or low level radioactive waste is generated. This list includes sites recorded in WCATS generating waste as of 01-OCT-1979 through the date the query was run (26-JUN-2014.) The information is broken down into columns as follows:
TA = Technical Area
BLDG = Building within the Technical Area
Waste Type = Haz (ardous), MLLW (Mixed Low Level Waste), TRU (Transuranic) and MTRU (Mixed Transuranic.)
First Fiscal Year Generated = Earliest Fiscal Year Generated
Last Fiscal Year Generated = Latest Fiscal Year Generated

TA	BLDG	Waste Type	First Fiscal Year Generated	Last Fiscal Year Generated
39	9	HAZ	2014	2014
39	98	HAZ	1991	1997
39	98	HAZ	2010	2010
39	GEN-AREAS	HAZ	1987	1999
39	GEN-AREAS	HAZ	2010	2010
39	OOOO	HAZ	1992	1992
40	1	HAZ	2003	2003
40	12	HAZ	1995	1996
40	12	HAZ	2005	2005
40	15	HAZ	1998	2003
40	23	HAZ	1986	1998
40	23	HAZ	1992	2000
40	23	HAZ	1994	1994
40	23	HAZ	1995	1995
40	23	HAZ	2002	2002
40	23	HAZ	1996	1998
40	23	HAZ	1991	1991
40	282	HAZ	2011	2011
40	4	HAZ	2003	2005
40	41	HAZ	1998	1998
40	41	HAZ	2005	2005
40	41	HAZ	2010	2010
40	45	HAZ	1991	1993
40	5	HAZ	1990	1998
40	5	HAZ	1998	2014
40	8	HAZ	2012	2012
40	8	HAZ	2012	2012
40	8	HAZ	2009	2009
40	8	HAZ	2003	2003
40	9	HAZ	1998	2013
40	GEN-AREAS	HAZ	1994	2014
40	RECEIVING	HAZ	2012	2012

Response to the NMED information request concerning a list of all LANL locations where hazardous waste, mixed waste, and non-hazardous TRU or low level radioactive waste is generated. This list includes sites recorded in WCATS generating waste as of 01-OCT-1979 through the date the query was run (26-JUN-2014.) The information is broken down into columns as follows:
TA = Technical Area
BLDG = Building within the Technical Area
Waste Type = Haz (ardous), MLLW (Mixed Low Level Waste), TRU (Transuranic) and MTRU (Mixed Transuranic.)
First Fiscal Year Generated = Earliest Fiscal Year Generated
Last Fiscal Year Generated = Latest Fiscal Year Generated

TA	BLDG	Waste Type	First Fiscal Year Generated	Last Fiscal Year Generated
41	1	HAZ	1990	1990
41	1	HAZ	1992	1992
41	2	HAZ	1986	1986
41	215	HAZ	1997	1997
41	30	HAZ	1993	1993
41	30	HAZ	1992	1995
41	4	HAZ	1984	1996
41	4	HAZ	2009	2009
41	4	HAZ	1998	2004
41	6	HAZ	2000	2000
41	6	HAZ	1997	1997
41	901	HAZ	2002	2002
41	GEN-AREAS	HAZ	1983	1996
42	57	HAZ	1995	1995
42	GEN-AREAS	HAZ	1995	1995
43	1	HAZ	1983	2012
43	1	HAZ	1995	1995
43	1	HAZ	2006	2006
43	1	HAZ	1994	1994
43	1	HAZ	2001	2004
43	1	HAZ	1996	1997
43	1	HAZ	1994	1994
43	1	HAZ	1992	1999
43	1	HAZ	1993	2013
43	1	HAZ	1991	2004
43	1	HAZ	1996	1996
43	1	HAZ	1999	1999
43	1	HAZ	1994	2013
43	1	HAZ	1994	1994
43	1	HAZ	1996	1996
43	1	HAZ	1998	2013
43	1	HAZ	1992	1992

Response to the NMED information request concerning a list of all LANL locations where hazardous waste, mixed waste, and non-hazardous TRU or low level radioactive waste is generated. This list includes sites recorded in WCATS generating waste as of 01-OCT-1979 through the date the query was run (26-JUN-2014.) The information is broken down into columns as follows:
TA = Technical Area
BLDG = Building within the Technical Area
Waste Type = Haz (ardous), MLLW (Mixed Low Level Waste), TRU (Transuranic) and MTRU (Mixed Transuranic.)
First Fiscal Year Generated = Earliest Fiscal Year Generated
Last Fiscal Year Generated = Latest Fiscal Year Generated

TA	BLDG	Waste Type	First Fiscal Year Generated	Last Fiscal Year Generated
43	1	HAZ	1994	1997
43	1	HAZ	2010	2010
43	1	HAZ	1994	2011
43	1	HAZ	1994	1995
43	1	HAZ	1993	1999
43	1	HAZ	1994	2002
43	1	HAZ	1993	2000
43	1	HAZ	1993	1994
43	1	HAZ	1994	2013
43	1	HAZ	1997	2008
43	1	HAZ	1998	1998
43	1	HAZ	1993	2011
43	1	HAZ	2007	2007
43	1	HAZ	1993	2011
43	1	HAZ	1994	1995
43	1	HAZ	1994	1996
43	1	HAZ	1992	1999
43	1	HAZ	1992	1992
43	1	HAZ	1992	2001
43	1	HAZ	1992	1999
43	1	HAZ	2010	2010
43	1	HAZ	1992	2008
43	1	HAZ	1992	2008
43	1	HAZ	1993	2007
43	1	HAZ	1993	1996
43	1	HAZ	1996	2007
43	1	HAZ	1994	2010
43	1	HAZ	1992	1994
43	1	HAZ	1995	2006
43	1	HAZ	1993	2013
43	1	HAZ	1992	1996
43	1	HAZ	1996	2000

Response to the NMED information request concerning a list of all LANL locations where hazardous waste, mixed waste, and non-hazardous TRU or low level radioactive waste is generated. This list includes sites recorded in WCATS generating waste as of 01-OCT-1979 through the date the query was run (26-JUN-2014.) The information is broken down into columns as follows:
TA = Technical Area
BLDG = Building within the Technical Area
Waste Type = Haz (ardous), MLLW (Mixed Low Level Waste), TRU (Transuranic) and MTRU (Mixed Transuranic.)
First Fiscal Year Generated = Earliest Fiscal Year Generated
Last Fiscal Year Generated = Latest Fiscal Year Generated

TA	BLDG	Waste Type	First Fiscal Year Generated	Last Fiscal Year Generated
43	1	HAZ	1994	2001
43	1	HAZ	2011	2011
43	1	HAZ	2006	2011
43	1	HAZ	1993	1993
43	1	HAZ	1994	2009
43	1	HAZ	1993	1995
43	1	HAZ	1994	2006
43	1	HAZ	2003	2003
43	1	HAZ	2007	2007
43	1	HAZ	1993	2009
43	1	HAZ	2004	2004
43	1	HAZ	2007	2007
43	1	HAZ	1993	1994
43	1	HAZ	1991	1995
43	1	HAZ	1993	1995
43	1	HAZ	1991	2007
43	1	HAZ	1993	1998
43	1	HAZ	1994	1994
43	1	HAZ	1993	2009
43	1	HAZ	2000	2000
43	1	HAZ	1993	1994
43	1	HAZ	1998	2009
43	1	HAZ	1994	1994
43	1	HAZ	1998	2011
43	1	HAZ	1997	2000
43	1	HAZ	1998	2004
43	1	HAZ	2007	2007
43	1	HAZ	1997	1998
43	1	HAZ	1994	2007
43	1	HAZ	1997	1999
43	1	HAZ	1992	2007
43	1	HAZ	2007	2007

Response to the NMED information request concerning a list of all LANL locations where hazardous waste, mixed waste, and non-hazardous TRU or low level radioactive waste is generated. This list includes sites recorded in WCATS generating waste as of 01-OCT-1979 through the date the query was run (26-JUN-2014.) The information is broken down into columns as follows:
TA = Technical Area
BLDG = Building within the Technical Area
Waste Type = Haz (ardous), MLLW (Mixed Low Level Waste), TRU (Transuranic) and MTRU (Mixed Transuranic.)
First Fiscal Year Generated = Earliest Fiscal Year Generated
Last Fiscal Year Generated = Latest Fiscal Year Generated

TA	BLDG	Waste Type	First Fiscal Year Generated	Last Fiscal Year Generated
43	1	HAZ	2002	2013
43	1	HAZ	2005	2007
43	1	HAZ	1993	1993
43	1	HAZ	1993	1999
43	1	HAZ	2000	2000
43	1	HAZ	1991	1993
43	1	HAZ	1991	2009
43	1	HAZ	2009	2013
43	1	HAZ	1992	1992
43	1	HAZ	1995	1995
43	1237	HAZ	1996	1996
43	1249	HAZ	1994	1994
43	127	HAZ	1992	1992
43	17	HAZ	1997	1997
43	2	HAZ	2004	2004
43	2	HAZ	2002	2002
43	20	HAZ	1990	1991
43	20	HAZ	2006	2006
43	20	HAZ	1992	2003
43	20	HAZ	2009	2009
43	22	HAZ	2001	2001
43	3	HAZ	1995	1995
43	34	HAZ	2001	2001
43	39	HAZ	2010	2010
43	39	HAZ	2010	2010
43	41	HAZ	1996	1997
43	43	HAZ	2003	2003
43	47	HAZ	1994	2000
43	47	HAZ	1995	2006
43	47	HAZ	1995	1995
43	49	HAZ	1998	1998
43	66	HAZ	1994	1994

Response to the NMED information request concerning a list of all LANL locations where hazardous waste, mixed waste, and non-hazardous TRU or low level radioactive waste is generated. This list includes sites recorded in WCATS generating waste as of 01-OCT-1979 through the date the query was run (26-JUN-2014.) The information is broken down into columns as follows:
TA = Technical Area
BLDG = Building within the Technical Area
Waste Type = Haz (ardous), MLLW (Mixed Low Level Waste), TRU (Transuranic) and MTRU (Mixed Transuranic.)
First Fiscal Year Generated = Earliest Fiscal Year Generated
Last Fiscal Year Generated = Latest Fiscal Year Generated

TA	BLDG	Waste Type	First Fiscal Year Generated	Last Fiscal Year Generated
43	76	HAZ	1991	1992
43	85	HAZ	1996	2004
43	85	HAZ	1996	2000
43	85	HAZ	1998	1998
43	85	HAZ	2003	2004
43	85	HAZ	2004	2004
43	85	HAZ	2004	2004
43	87	HAZ	2004	2004
43	GEN-AREAS	HAZ	1992	1992
43	GEN-AREAS	HAZ	1992	1993
43	GEN-AREAS	HAZ	1994	1995
43	GEN-AREAS	HAZ	1992	1992
43	GEN-AREAS	HAZ	1994	1994
43	GEN-AREAS	HAZ	2006	2008
43	GEN-AREAS	HAZ	2003	2003
43	GEN-AREAS	HAZ	1995	1995
43	GEN-AREAS	HAZ	2005	2005
43	GEN-AREAS	HAZ	1983	2007
43	GEN-AREAS	HAZ	2009	2011
43	HRL	HAZ	1995	1995
43	HRL	HAZ	1992	1995
43	HRL	HAZ	1993	1995
43	STOR	HAZ	1992	1995
45	31	HAZ	2000	2000
45	GEN-AREAS	HAZ	2007	2007
46	1	HAZ	1983	2008
46	1	HAZ	1994	1995
46	1	HAZ	1998	1998
46	1	HAZ	1992	1992
46	1	HAZ	1993	1993
46	1	HAZ	2001	2001
46	1	HAZ	1995	1995

Response to the NMED information request concerning a list of all LANL locations where hazardous waste, mixed waste, and non-hazardous TRU or low level radioactive waste is generated. This list includes sites recorded in WCATS generating waste as of 01-OCT-1979 through the date the query was run (26-JUN-2014.) The information is broken down into columns as follows:
TA = Technical Area
BLDG = Building within the Technical Area
Waste Type = Haz (ardous), MLLW (Mixed Low Level Waste), TRU (Transuranic) and MTRU (Mixed Transuranic.)
First Fiscal Year Generated = Earliest Fiscal Year Generated
Last Fiscal Year Generated = Latest Fiscal Year Generated

TA	BLDG	Waste Type	First Fiscal Year Generated	Last Fiscal Year Generated
46	1	HAZ	1996	1996
46	1	HAZ	2003	2003
46	1	HAZ	2001	2008
46	1	HAZ	2004	2004
46	1	HAZ	2004	2004
46	1	HAZ	2004	2004
46	1	HAZ	1999	1999
46	1	HAZ	2009	2010
46	1	HAZ	1997	2008
46	1	HAZ	1996	1996
46	1	HAZ	1993	1993
46	1	HAZ	1993	1995
46	1	HAZ	2003	2004
46	1	HAZ	1992	1995
46	1	HAZ	1995	1995
46	119	HAZ	1992	1992
46	1237	HAZ	1997	1999
46	154	HAZ	1991	1991
46	154	HAZ	1986	2000
46	154	HAZ	2004	2010
46	154	HAZ	2003	2012
46	154	HAZ	2006	2006
46	154	HAZ	2007	2014
46	154	HAZ	1991	1999
46	154	HAZ	1993	2010
46	154	HAZ	1993	2006
46	154	HAZ	1992	2014
46	154	HAZ	2001	2007
46	154	HAZ	2001	2007
46	154	HAZ	2010	2010
46	154	HAZ	1994	1994
46	154	HAZ	1994	1994

Response to the NMED information request concerning a list of all LANL locations where hazardous waste, mixed waste, and non-hazardous TRU or low level radioactive waste is generated. This list includes sites recorded in WCATS generating waste as of 01-OCT-1979 through the date the query was run (26-JUN-2014.) The information is broken down into columns as follows:
TA = Technical Area
BLDG = Building within the Technical Area
Waste Type = Haz (ardous), MLLW (Mixed Low Level Waste), TRU (Transuranic) and MTRU (Mixed Transuranic.)
First Fiscal Year Generated = Earliest Fiscal Year Generated
Last Fiscal Year Generated = Latest Fiscal Year Generated

TA	BLDG	Waste Type	First Fiscal Year Generated	Last Fiscal Year Generated
46	154	HAZ	2009	2013
46	154	HAZ	2002	2002
46	154	HAZ	1993	1993
46	1543	HAZ	1993	1995
46	158	HAZ	1991	2009
46	158	HAZ	1999	2010
46	158	HAZ	2009	2013
46	16	HAZ	1986	1999
46	16	HAZ	2002	2002
46	16	HAZ	1993	1994
46	16	HAZ	1993	1994
46	176	HAZ	1991	1991
46	195	HAZ	2010	2010
46	2	HAZ	2007	2007
46	200	HAZ	1990	2001
46	200	HAZ	1991	2006
46	204	HAZ	1993	1993
46	208	HAZ	2006	2010
46	231	HAZ	1995	1995
46	24	HAZ	1984	2007
46	24	HAZ	1991	1992
46	24	HAZ	1992	1992
46	24	HAZ	2004	2005
46	24	HAZ	1999	1999
46	24	HAZ	2008	2008
46	24	HAZ	1998	1999
46	24	HAZ	2010	2010
46	24	HAZ	2000	2010
46	24	HAZ	2003	2003
46	24	HAZ	2000	2000
46	24	HAZ	1999	2012
46	24	HAZ	2005	2010

Response to the NMED information request concerning a list of all LANL locations where hazardous waste, mixed waste, and non-hazardous TRU or low level radioactive waste is generated. This list includes sites recorded in WCATS generating waste as of 01-OCT-1979 through the date the query was run (26-JUN-2014.) The information is broken down into columns as follows:
TA = Technical Area
BLDG = Building within the Technical Area
Waste Type = Haz (ardous), MLLW (Mixed Low Level Waste), TRU (Transuranic) and MTRU (Mixed Transuranic.)
First Fiscal Year Generated = Earliest Fiscal Year Generated
Last Fiscal Year Generated = Latest Fiscal Year Generated

TA	BLDG	Waste Type	First Fiscal Year Generated	Last Fiscal Year Generated
46	24	HAZ	1999	2011
46	24	HAZ	2004	2004
46	24	HAZ	2003	2010
46	24	HAZ	2001	2010
46	24	HAZ	2005	2008
46	24	HAZ	1991	2010
46	24	HAZ	1996	1997
46	24	HAZ	2003	2014
46	24	HAZ	1993	1999
46	24	HAZ	2013	2013
46	24	HAZ	1998	2011
46	24	HAZ	1998	2012
46	24	HAZ	2005	2005
46	24	HAZ	2002	2004
46	24	HAZ	2008	2013
46	240001	HAZ	1999	1999
46	240001	HAZ	1998	1999
46	25	HAZ	1986	1994
46	25	HAZ	1996	1996
46	250	HAZ	1993	1999
46	250	HAZ	1995	1995
46	250	HAZ	1993	2010
46	250	HAZ	1996	2011
46	250	HAZ	1994	2012
46	250	HAZ	2006	2014
46	250	HAZ	2007	2009
46	250	HAZ	1992	2007
46	250	HAZ	2008	2011
46	250	HAZ	2005	2009
46	250	HAZ	2000	2002
46	250	HAZ	2010	2010
46	250	HAZ	1999	1999

Response to the NMED information request concerning a list of all LANL locations where hazardous waste, mixed waste, and non-hazardous TRU or low level radioactive waste is generated. This list includes sites recorded in WCATS generating waste as of 01-OCT-1979 through the date the query was run (26-JUN-2014.) The information is broken down into columns as follows:
TA = Technical Area
BLDG = Building within the Technical Area
Waste Type = Haz (ardous), MLLW (Mixed Low Level Waste), TRU (Transuranic) and MTRU (Mixed Transuranic.)
First Fiscal Year Generated = Earliest Fiscal Year Generated
Last Fiscal Year Generated = Latest Fiscal Year Generated

TA	BLDG	Waste Type	First Fiscal Year Generated	Last Fiscal Year Generated
46	2508	HAZ	1994	1994
46	27	HAZ	1997	1997
46	277	HAZ	1993	1993
46	30	HAZ	1990	1997
46	30	HAZ	1994	2006
46	30	HAZ	1997	1997
46	30	HAZ	1994	2003
46	30	HAZ	1996	1996
46	30	HAZ	1994	1994
46	30	HAZ	1996	1996
46	30	HAZ	1998	1998
46	30	HAZ	1997	2002
46	30	HAZ	2010	2010
46	301	HAZ	1994	1994
46	31	HAZ	1984	2009
46	31	HAZ	1997	1997
46	31	HAZ	1991	1996
46	31	HAZ	1993	1995
46	31	HAZ	1991	1995
46	31	HAZ	1993	2001
46	31	HAZ	1998	2010
46	31	HAZ	1993	2013
46	31	HAZ	2006	2006
46	31	HAZ	1994	2013
46	31	HAZ	1993	2012
46	31	HAZ	1995	1997
46	31	HAZ	1996	2004
46	31	HAZ	1997	2009
46	31	HAZ	2003	2012
46	31	HAZ	1993	1999
46	31	HAZ	1995	1995
46	31	HAZ	2002	2013

Response to the NMED information request concerning a list of all LANL locations where hazardous waste, mixed waste, and non-hazardous TRU or low level radioactive waste is generated. This list includes sites recorded in WCATS generating waste as of 01-OCT-1979 through the date the query was run (26-JUN-2014.) The information is broken down into columns as follows:
TA = Technical Area
BLDG = Building within the Technical Area
Waste Type = Haz (ardous), MLLW (Mixed Low Level Waste), TRU (Transuranic) and MTRU (Mixed Transuranic.)
First Fiscal Year Generated = Earliest Fiscal Year Generated
Last Fiscal Year Generated = Latest Fiscal Year Generated

TA	BLDG	Waste Type	First Fiscal Year Generated	Last Fiscal Year Generated
46	31	HAZ	2008	2012
46	31	HAZ	1992	1993
46	31	HAZ	1993	1993
46	31	HAZ	1994	1994
46	31	HAZ	1996	1996
46	31	HAZ	2009	2014
46	31	HAZ	1994	2006
46	31	HAZ	1994	1994
46	31	HAZ	1994	1994
46	33	HAZ	2007	2007
46	33	HAZ	1996	1996
46	333	HAZ	1996	2003
46	333	HAZ	1993	1995
46	333	HAZ	1996	1997
46	333	HAZ	2002	2002
46	335	HAZ	1993	2013
46	346	HAZ	1995	1995
46	36	HAZ	2012	2012
46	36	HAZ	2011	2011
46	39	HAZ	2007	2007
46	398	HAZ	2014	2014
46	40	HAZ	2008	2008
46	40	HAZ	2008	2008
46	402	HAZ	1993	1993
46	41	HAZ	1983	2013
46	41	HAZ	1994	2014
46	41	HAZ	1991	2014
46	41	HAZ	1995	2003
46	41	HAZ	1996	1997
46	41	HAZ	1991	1995
46	41	HAZ	2009	2009
46	41	HAZ	1991	1991

Response to the NMED information request concerning a list of all LANL locations where hazardous waste, mixed waste, and non-hazardous TRU or low level radioactive waste is generated. This list includes sites recorded in WCATS generating waste as of 01-OCT-1979 through the date the query was run (26-JUN-2014.) The information is broken down into columns as follows:
TA = Technical Area
BLDG = Building within the Technical Area
Waste Type = Haz (ardous), MLLW (Mixed Low Level Waste), TRU (Transuranic) and MTRU (Mixed Transuranic.)
First Fiscal Year Generated = Earliest Fiscal Year Generated
Last Fiscal Year Generated = Latest Fiscal Year Generated

TA	BLDG	Waste Type	First Fiscal Year Generated	Last Fiscal Year Generated
46	41	HAZ	1992	1992
46	416	HAZ	2009	2010
46	416	HAZ	2010	2010
46	416	HAZ	2010	2010
46	42	HAZ	1992	1998
46	42	HAZ	2011	2011
46	42	HAZ	2011	2011
46	42	HAZ	1997	2003
46	426	HAZ	2007	2007
46	46	HAZ	2003	2004
46	51	HAZ	2010	2010
46	58	HAZ	1996	1996
46	58	HAZ	1987	1997
46	58	HAZ	1994	1995
46	58	HAZ	1996	1996
46	58	HAZ	2013	2013
46	58	HAZ	1997	2012
46	58	HAZ	1992	1993
46	58	HAZ	1993	1993
46	58	HAZ	1996	1996
46	59	HAZ	1991	2005
46	59	HAZ	1991	1992
46	59	HAZ	2005	2005
46	75	HAZ	1984	2002
46	75	HAZ	1999	2000
46	75	HAZ	1997	2002
46	76	HAZ	1984	1999
46	76	HAZ	1994	1996
46	76	HAZ	1996	2001
46	76	HAZ	2000	2001
46	76	HAZ	1996	2014
46	76	HAZ	2001	2014

Response to the NMED information request concerning a list of all LANL locations where hazardous waste, mixed waste, and non-hazardous TRU or low level radioactive waste is generated. This list includes sites recorded in WCATS generating waste as of 01-OCT-1979 through the date the query was run (26-JUN-2014.) The information is broken down into columns as follows:
TA = Technical Area
BLDG = Building within the Technical Area
Waste Type = Haz (ardous), MLLW (Mixed Low Level Waste), TRU (Transuranic) and MTRU (Mixed Transuranic.)
First Fiscal Year Generated = Earliest Fiscal Year Generated
Last Fiscal Year Generated = Latest Fiscal Year Generated

TA	BLDG	Waste Type	First Fiscal Year Generated	Last Fiscal Year Generated
46	76	HAZ	1991	2014
46	76	HAZ	2009	2014
46	77	HAZ	1998	1998
46	85	HAZ	2004	2004
46	85	HAZ	1996	1997
46	85	HAZ	2004	2004
46	85	HAZ	2004	2005
46	87	HAZ	2004	2004
46	88	HAZ	1983	1998
46	88	HAZ	1993	2000
46	88	HAZ	1997	2001
46	88	HAZ	1994	1995
46	88	HAZ	2001	2001
46	88	HAZ	1991	1991
46	GEN-AREAS	HAZ	2001	2002
46	GEN-AREAS	HAZ	1983	2007
46	GEN-AREAS	HAZ	2004	2004
48	1	HAZ	1985	2008
48	1	HAZ	1992	1992
48	1	HAZ	2010	2010
48	1	HAZ	1994	2001
48	1	HAZ	1993	2001
48	1	HAZ	1995	1995
48	1	HAZ	1993	1994
48	1	HAZ	1995	2012
48	1	HAZ	1998	2002
48	1	HAZ	2002	2010
48	1	HAZ	1992	1992
48	1	HAZ	2000	2001
48	1	HAZ	1992	1992
48	1	HAZ	2010	2010
48	1	HAZ	2004	2014

Response to the NMED information request concerning a list of all LANL locations where hazardous waste, mixed waste, and non-hazardous TRU or low level radioactive waste is generated. This list includes sites recorded in WCATS generating waste as of 01-OCT-1979 through the date the query was run (26-JUN-2014.) The information is broken down into columns as follows:
TA = Technical Area
BLDG = Building within the Technical Area
Waste Type = Haz (ardous), MLLW (Mixed Low Level Waste), TRU (Transuranic) and MTRU (Mixed Transuranic.)
First Fiscal Year Generated = Earliest Fiscal Year Generated
Last Fiscal Year Generated = Latest Fiscal Year Generated

TA	BLDG	Waste Type	First Fiscal Year Generated	Last Fiscal Year Generated
48	1	HAZ	1999	2001
48	1	HAZ	1999	1999
48	1	HAZ	1999	2001
48	1	HAZ	1998	1998
48	1	HAZ	1992	1992
48	1	HAZ	1995	1999
48	1	HAZ	1994	1995
48	1	HAZ	1993	1993
48	1	HAZ	1992	1992
48	1	HAZ	2001	2006
48	1	HAZ	1998	2014
48	1	HAZ	2000	2014
48	1	HAZ	2010	2010
48	1	HAZ	1994	2012
48	1	HAZ	1998	2001
48	1	HAZ	1993	2014
48	1	HAZ	1991	2013
48	1	HAZ	1991	1998
48	1	HAZ	1992	2006
48	1	HAZ	2012	2012
48	1	HAZ	2012	2012
48	1	HAZ	2009	2009
48	1	HAZ	1992	1993
48	1	HAZ	2000	2004
48	1	HAZ	1995	2012
48	1	HAZ	1997	1997
48	1	HAZ	1998	2014
48	1	HAZ	2013	2013
48	1	HAZ	1994	2009
48	1	HAZ	1997	1997
48	1	HAZ	1998	2013
48	1	HAZ	2001	2001

Response to the NMED information request concerning a list of all LANL locations where hazardous waste, mixed waste, and non-hazardous TRU or low level radioactive waste is generated. This list includes sites recorded in WCATS generating waste as of 01-OCT-1979 through the date the query was run (26-JUN-2014.) The information is broken down into columns as follows:
TA = Technical Area
BLDG = Building within the Technical Area
Waste Type = Haz (ardous), MLLW (Mixed Low Level Waste), TRU (Transuranic) and MTRU (Mixed Transuranic.)
First Fiscal Year Generated = Earliest Fiscal Year Generated
Last Fiscal Year Generated = Latest Fiscal Year Generated

TA	BLDG	Waste Type	First Fiscal Year Generated	Last Fiscal Year Generated
48	1	HAZ	2006	2007
48	1	HAZ	1996	1996
48	1	HAZ	1994	2012
48	1	HAZ	2001	2011
48	1	HAZ	1991	1999
48	1	HAZ	1999	1999
48	1	HAZ	1991	1992
48	1	HAZ	1994	2004
48	1	HAZ	2013	2013
48	1	HAZ	2006	2007
48	1	HAZ	1995	2007
48	1	HAZ	1991	2000
48	1	HAZ	2000	2000
48	1	HAZ	1991	2008
48	1	HAZ	1998	2003
48	1	HAZ	2009	2014
48	1	HAZ	2000	2000
48	107	HAZ	1998	2008
48	107	HAZ	1997	2014
48	107	HAZ	1997	2009
48	107	HAZ	2001	2008
48	107	HAZ	1997	2007
48	107	HAZ	2013	2013
48	154	HAZ	1998	1998
48	158	HAZ	2003	2004
48	17	HAZ	2001	2001
48	28	HAZ	2001	2003
48	28	HAZ	2014	2014
48	28	HAZ	2010	2014
48	28	HAZ	2012	2012
48	34	HAZ	1996	1996
48	365	HAZ	1998	1998

Response to the NMED information request concerning a list of all LANL locations where hazardous waste, mixed waste, and non-hazardous TRU or low level radioactive waste is generated. This list includes sites recorded in WCATS generating waste as of 01-OCT-1979 through the date the query was run (26-JUN-2014.) The information is broken down into columns as follows:
TA = Technical Area
BLDG = Building within the Technical Area
Waste Type = Haz (ardous), MLLW (Mixed Low Level Waste), TRU (Transuranic) and MTRU (Mixed Transuranic.)
First Fiscal Year Generated = Earliest Fiscal Year Generated
Last Fiscal Year Generated = Latest Fiscal Year Generated

TA	BLDG	Waste Type	First Fiscal Year Generated	Last Fiscal Year Generated
48	41	HAZ	1993	1993
48	45	HAZ	1996	1996
48	45	HAZ	1995	2000
48	45	HAZ	1996	1998
48	45	HAZ	1998	1998
48	45	HAZ	1998	2014
48	45	HAZ	2000	2000
48	45	HAZ	2001	2001
48	45	HAZ	2002	2003
48	45	HAZ	1993	1994
48	45	HAZ	2001	2001
48	45	HAZ	1996	1996
48	45	HAZ	2014	2014
48	45	HAZ	1994	1994
48	45	HAZ	2011	2011
48	45	HAZ	1998	2000
48	45	HAZ	1994	1998
48	45	HAZ	1993	2000
48	45	HAZ	1992	1994
48	46	HAZ	1994	1995
48	57	HAZ	1990	1990
48	621	HAZ	2004	2004
48	76	HAZ	1998	2007
48	8	HAZ	1995	1995
48	GEN-AREAS	HAZ	2001	2005
48	GEN-AREAS	HAZ	1985	2007
48	GEN-AREAS	HAZ	2010	2010
48	RC1	HAZ	1995	1995
48	RC1	HAZ	1992	1992
49	GEN-AREAS	HAZ	1995	1995
50	1	HAZ	1984	2002
50	1	HAZ	1994	2004

Response to the NMED information request concerning a list of all LANL locations where hazardous waste, mixed waste, and non-hazardous TRU or low level radioactive waste is generated. This list includes sites recorded in WCATS generating waste as of 01-OCT-1979 through the date the query was run (26-JUN-2014.) The information is broken down into columns as follows:
TA = Technical Area
BLDG = Building within the Technical Area
Waste Type = Haz (ardous), MLLW (Mixed Low Level Waste), TRU (Transuranic) and MTRU (Mixed Transuranic.)
First Fiscal Year Generated = Earliest Fiscal Year Generated
Last Fiscal Year Generated = Latest Fiscal Year Generated

TA	BLDG	Waste Type	First Fiscal Year Generated	Last Fiscal Year Generated
50	1	HAZ	1991	1994
50	1	HAZ	1991	1991
50	1	HAZ	1995	1995
50	1	HAZ	1998	1998
50	1	HAZ	1992	2002
50	1	HAZ	1991	2002
50	1	HAZ	2000	2000
50	1	HAZ	1991	1996
50	1	HAZ	1994	1995
50	1	HAZ	1997	1998
50	1	HAZ	1999	1999
50	1	HAZ	2001	2001
50	1	HAZ	2006	2006
50	1	HAZ	1992	1999
50	1	HAZ	2001	2002
50	1	HAZ	2000	2001
50	1	HAZ	1991	1991
50	1	HAZ	1996	1996
50	1	HAZ	1994	1994
50	1	HAZ	1993	1993
50	1	HAZ	1999	2001
50	1	HAZ	1996	1996
50	1	HAZ	1998	1998
50	1	HAZ	1993	2000
50	1	HAZ	2013	2014
50	1	HAZ	1998	2001
50	1	HAZ	1993	1993
50	105	HAZ	1990	1990
50	114	HAZ	1998	1998
50	114	HAZ	1998	1998
50	125	HAZ	1992	1992
50	2	HAZ	2002	2002

Response to the NMED information request concerning a list of all LANL locations where hazardous waste, mixed waste, and non-hazardous TRU or low level radioactive waste is generated. This list includes sites recorded in WCATS generating waste as of 01-OCT-1979 through the date the query was run (26-JUN-2014.) The information is broken down into columns as follows:
TA = Technical Area
BLDG = Building within the Technical Area
Waste Type = Haz (ardous), MLLW (Mixed Low Level Waste), TRU (Transuranic) and MTRU (Mixed Transuranic.)
First Fiscal Year Generated = Earliest Fiscal Year Generated
Last Fiscal Year Generated = Latest Fiscal Year Generated

TA	BLDG	Waste Type	First Fiscal Year Generated	Last Fiscal Year Generated
50	29	HAZ	2000	2000
50	37	HAZ	1986	1998
50	37	HAZ	1991	1991
50	37	HAZ	1999	2000
50	37	HAZ	1991	1991
50	37	HAZ	2002	2002
50	39	HAZ	2007	2007
50	54	HAZ	1991	1991
50	54	HAZ	2001	2003
50	54	HAZ	2013	2013
50	622	HAZ	1991	1991
50	68	HAZ	1994	1995
50	69	HAZ	1987	1993
50	69	HAZ	1993	1993
50	84	HAZ	1990	1990
50	85	HAZ	2002	2002
50	GEN-AREAS	HAZ	1983	2008
50	II	HAZ	1992	1992
50	L90-01778	HAZ	2009	2010
51	1	HAZ	1997	1997
51	11	HAZ	1990	2000
51	11	HAZ	1995	2013
51	11	HAZ	1995	1996
51	11	HAZ	1995	1996
51	11	HAZ	1992	2003
51	11	HAZ	1995	1995
51	11	HAZ	1994	2006
51	11	HAZ	1991	1991
51	11	HAZ	2011	2013
51	12	HAZ	1995	1995
51	23	HAZ	1995	1995
51	23	HAZ	1995	1995

Response to the NMED information request concerning a list of all LANL locations where hazardous waste, mixed waste, and non-hazardous TRU or low level radioactive waste is generated. This list includes sites recorded in WCATS generating waste as of 01-OCT-1979 through the date the query was run (26-JUN-2014.) The information is broken down into columns as follows:
TA = Technical Area
BLDG = Building within the Technical Area
Waste Type = Haz (ardous), MLLW (Mixed Low Level Waste), TRU (Transuranic) and MTRU (Mixed Transuranic.)
First Fiscal Year Generated = Earliest Fiscal Year Generated
Last Fiscal Year Generated = Latest Fiscal Year Generated

TA	BLDG	Waste Type	First Fiscal Year Generated	Last Fiscal Year Generated
51	27	HAZ	1990	1990
51	73	HAZ	1998	1998
51	73	HAZ	1992	1998
51	FELD	HAZ	1995	1995
51	GEN-AREAS	HAZ	1990	1995
51	GEN-AREAS	HAZ	2001	2001
52	1	HAZ	1986	1993
52	1	HAZ	1993	1993
52	1	HAZ	2001	2001
52	12	HAZ	1994	1995
52	120	HAZ	1994	1995
52	882	HAZ	1999	1999
52	GEN-AREAS	HAZ	1986	1991
53	1	HAZ	1986	2001
53	1	HAZ	2002	2002
53	1	HAZ	1992	1992
53	1	HAZ	2001	2001
53	1	HAZ	1993	1996
53	1	HAZ	1995	1996
53	1	HAZ	1991	1996
53	1	HAZ	1997	1997
53	1	HAZ	1991	1992
53	1	HAZ	1995	1997
53	1	HAZ	1992	1992
53	1	HAZ	1996	1997
53	1	HAZ	1992	1992
53	1	HAZ	1993	1996
53	1	HAZ	1991	1993
53	1	HAZ	2014	2014
53	1	HAZ	1991	1991
53	1	HAZ	1993	1993
53	1	HAZ	1992	1992

Response to the NMED information request concerning a list of all LANL locations where hazardous waste, mixed waste, and non-hazardous TRU or low level radioactive waste is generated. This list includes sites recorded in WCATS generating waste as of 01-OCT-1979 through the date the query was run (26-JUN-2014.) The information is broken down into columns as follows:
TA = Technical Area
BLDG = Building within the Technical Area
Waste Type = Haz (ardous), MLLW (Mixed Low Level Waste), TRU (Transuranic) and MTRU (Mixed Transuranic.)
First Fiscal Year Generated = Earliest Fiscal Year Generated
Last Fiscal Year Generated = Latest Fiscal Year Generated

TA	BLDG	Waste Type	First Fiscal Year Generated	Last Fiscal Year Generated
53	1	HAZ	1993	1993
53	1	HAZ	1992	1995
53	1	HAZ	2006	2006
53	1	HAZ	1996	1996
53	1	HAZ	1993	1993
53	1	HAZ	1998	1998
53	1	HAZ	1994	1994
53	1	HAZ	1991	1993
53	1	HAZ	1996	2003
53	1	HAZ	1996	1996
53	1	HAZ	1995	1996
53	1	HAZ	1994	1994
53	1	HAZ	1993	1993
53	1	HAZ	1998	1998
53	1	HAZ	2013	2013
53	1031	HAZ	1990	1991
53	1072	HAZ	1998	1998
53	1180	HAZ	1995	1999
53	1180	HAZ	1995	1995
53	1180	HAZ	1997	1997
53	1180	HAZ	1997	1997
53	1199	HAZ	2004	2004
53	1237	HAZ	1997	1997
53	14	HAZ	1987	1998
53	14	HAZ	1993	1995
53	14	HAZ	1993	1993
53	14	HAZ	2009	2009
53	14	HAZ	1991	1991
53	142	HAZ	1993	1993
53	142	HAZ	1993	1993
53	142	HAZ	1993	1993
53	15	HAZ	1986	2007

Response to the NMED information request concerning a list of all LANL locations where hazardous waste, mixed waste, and non-hazardous TRU or low level radioactive waste is generated. This list includes sites recorded in WCATS generating waste as of 01-OCT-1979 through the date the query was run (26-JUN-2014.) The information is broken down into columns as follows:
TA = Technical Area
BLDG = Building within the Technical Area
Waste Type = Haz (ardous), MLLW (Mixed Low Level Waste), TRU (Transuranic) and MTRU (Mixed Transuranic.)
First Fiscal Year Generated = Earliest Fiscal Year Generated
Last Fiscal Year Generated = Latest Fiscal Year Generated

TA	BLDG	Waste Type	First Fiscal Year Generated	Last Fiscal Year Generated
53	15	HAZ	1995	1998
53	15	HAZ	1991	2007
53	15	HAZ	1994	2009
53	15	HAZ	2010	2010
53	15	HAZ	1994	1996
53	15	HAZ	1994	1994
53	15	HAZ	2009	2014
53	15	HAZ	2011	2011
53	15	HAZ	1993	1995
53	154	HAZ	2008	2008
53	16	HAZ	1987	1998
53	17	HAZ	1987	1998
53	17	HAZ	1991	1991
53	17	HAZ	1991	2005
53	17	HAZ	1993	1993
53	18	HAZ	1991	2010
53	18	HAZ	1991	1992
53	18	HAZ	1995	1996
53	18	HAZ	2003	2013
53	18	HAZ	1998	1998
53	18	HAZ	2011	2011
53	19	HAZ	1987	1998
53	19	HAZ	1992	1993
53	2	HAZ	1983	2006
53	2	HAZ	2006	2006
53	2	HAZ	1996	1996
53	2	HAZ	1991	1998
53	2	HAZ	1992	1994
53	2	HAZ	1992	1994
53	2	HAZ	1996	1997
53	2	HAZ	1998	1998
53	2	HAZ	1992	1992

Response to the NMED information request concerning a list of all LANL locations where hazardous waste, mixed waste, and non-hazardous TRU or low level radioactive waste is generated. This list includes sites recorded in WCATS generating waste as of 01-OCT-1979 through the date the query was run (26-JUN-2014.) The information is broken down into columns as follows:
TA = Technical Area
BLDG = Building within the Technical Area
Waste Type = Haz (ardous), MLLW (Mixed Low Level Waste), TRU (Transuranic) and MTRU (Mixed Transuranic.)
First Fiscal Year Generated = Earliest Fiscal Year Generated
Last Fiscal Year Generated = Latest Fiscal Year Generated

TA	BLDG	Waste Type	First Fiscal Year Generated	Last Fiscal Year Generated
53	2	HAZ	1991	1992
53	2	HAZ	2010	2010
53	2	HAZ	1998	1998
53	22	HAZ	1991	1994
53	22	HAZ	1992	1997
53	23	HAZ	1993	1998
53	23	HAZ	1996	1996
53	23	HAZ	1993	1993
53	24	HAZ	1989	1998
53	24	HAZ	1993	1993
53	24	HAZ	1994	1994
53	24	HAZ	1991	1991
53	25	HAZ	1990	1998
53	25	HAZ	1997	1997
53	25	HAZ	1996	1996
53	25	HAZ	1991	1992
53	26	HAZ	1988	1992
53	26	HAZ	1993	1993
53	26	HAZ	2009	2009
53	26	HAZ	2001	2001
53	29	HAZ	1990	1990
53	3	HAZ	1991	1991
53	3	HAZ	1987	2008
53	3	HAZ	1997	1997
53	3	HAZ	1996	1996
53	3	HAZ	1991	1992
53	3	HAZ	1997	1999
53	3	HAZ	1992	1992
53	3	HAZ	1992	1995
53	3	HAZ	1992	1992
53	3	HAZ	2012	2012
53	3	HAZ	1992	1992

Response to the NMED information request concerning a list of all LANL locations where hazardous waste, mixed waste, and non-hazardous TRU or low level radioactive waste is generated. This list includes sites recorded in WCATS generating waste as of 01-OCT-1979 through the date the query was run (26-JUN-2014.) The information is broken down into columns as follows:
TA = Technical Area
BLDG = Building within the Technical Area
Waste Type = Haz (ardous), MLLW (Mixed Low Level Waste), TRU (Transuranic) and MTRU (Mixed Transuranic.)
First Fiscal Year Generated = Earliest Fiscal Year Generated
Last Fiscal Year Generated = Latest Fiscal Year Generated

TA	BLDG	Waste Type	First Fiscal Year Generated	Last Fiscal Year Generated
53	3	HAZ	1994	1994
53	3	HAZ	1995	1998
53	3	HAZ	2011	2011
53	3	HAZ	1991	2008
53	3	HAZ	1993	1993
53	3	HAZ	1991	2007
53	3	HAZ	1991	1992
53	3	HAZ	1992	2008
53	3	HAZ	1996	1998
53	3	HAZ	1994	1994
53	3	HAZ	1991	1992
53	3	HAZ	1993	1993
53	3	HAZ	1999	1999
53	3	HAZ	2003	2003
53	3	HAZ	2007	2009
53	3	HAZ	2007	2014
53	3	HAZ	2003	2004
53	3	HAZ	1995	1995
53	3	HAZ	1996	1996
53	30	HAZ	1993	1998
53	30	HAZ	2003	2004
53	30	HAZ	1994	1994
53	30	HAZ	2000	2001
53	30	HAZ	2008	2011
53	31	HAZ	1989	1998
53	31	HAZ	1992	1992
53	31	HAZ	1993	1996
53	364	HAZ	1995	1996
53	365	HAZ	1991	2007
53	365	HAZ	1994	1994
53	365	HAZ	1991	1995
53	365	HAZ	1996	1996

Response to the NMED information request concerning a list of all LANL locations where hazardous waste, mixed waste, and non-hazardous TRU or low level radioactive waste is generated. This list includes sites recorded in WCATS generating waste as of 01-OCT-1979 through the date the query was run (26-JUN-2014.) The information is broken down into columns as follows:
TA = Technical Area
BLDG = Building within the Technical Area
Waste Type = Haz (ardous), MLLW (Mixed Low Level Waste), TRU (Transuranic) and MTRU (Mixed Transuranic.)
First Fiscal Year Generated = Earliest Fiscal Year Generated
Last Fiscal Year Generated = Latest Fiscal Year Generated

TA	BLDG	Waste Type	First Fiscal Year Generated	Last Fiscal Year Generated
53	365	HAZ	2009	2011
53	365	HAZ	1996	1998
53	372	HAZ	2008	2008
53	380	HAZ	1994	1994
53	380	HAZ	1996	1996
53	39	HAZ	1987	1989
53	39	HAZ	1993	1994
53	4	HAZ	1986	1993
53	4	HAZ	1992	1993
53	4	HAZ	1999	1999
53	4	HAZ	1991	1997
53	4	HAZ	1998	1998
53	4	HAZ	1992	1992
53	40	HAZ	1999	2000
53	403	HAZ	1997	1997
53	403	HAZ	1997	1997
53	403	HAZ	1994	1994
53	403	HAZ	1997	1997
53	404	HAZ	1992	2003
53	404	HAZ	1993	1993
53	406	HAZ	1989	1989
53	41	HAZ	2009	2009
53	43	HAZ	1994	1995
53	44	HAZ	1991	1991
53	46	HAZ	1995	1995
53	471	HAZ	2006	2006
53	5	HAZ	1990	1990
53	53	HAZ	1996	1996
53	598	HAZ	1994	1994
53	6	HAZ	1986	2004
53	6	HAZ	1998	1999
53	6	HAZ	1999	1999

Response to the NMED information request concerning a list of all LANL locations where hazardous waste, mixed waste, and non-hazardous TRU or low level radioactive waste is generated. This list includes sites recorded in WCATS generating waste as of 01-OCT-1979 through the date the query was run (26-JUN-2014.) The information is broken down into columns as follows:
TA = Technical Area
BLDG = Building within the Technical Area
Waste Type = Haz (ardous), MLLW (Mixed Low Level Waste), TRU (Transuranic) and MTRU (Mixed Transuranic.)
First Fiscal Year Generated = Earliest Fiscal Year Generated
Last Fiscal Year Generated = Latest Fiscal Year Generated

TA	BLDG	Waste Type	First Fiscal Year Generated	Last Fiscal Year Generated
53	6	HAZ	2004	2004
53	621	HAZ	1998	2003
53	621	HAZ	2003	2003
53	621	HAZ	1998	1998
53	622	HAZ	1989	1998
53	622	HAZ	1997	1997
53	622	HAZ	1991	1998
53	622	HAZ	2006	2006
53	622	HAZ	1998	1998
53	622	HAZ	1994	1996
53	622	HAZ	1993	1995
53	622	HAZ	1997	1997
53	622	HAZ	1995	1995
53	622	HAZ	1993	1993
53	622	HAZ	2004	2012
53	622	HAZ	2004	2004
53	662	HAZ	1998	1998
53	662	HAZ	1998	1998
53	7	HAZ	1992	2005
53	7	HAZ	2008	2008
53	734	HAZ	1999	1999
53	737	HAZ	2003	2008
53	757	HAZ	1998	1998
53	8	HAZ	1992	1992
53	8	HAZ	1997	1997
53	818	HAZ	1997	1997
53	872	HAZ	1998	1998
53	882	HAZ	1999	1999
53	882	HAZ	1999	1999
53	882	HAZ	1998	1999
53	882	HAZ	1998	1999
53	882	HAZ	1997	2000

Response to the NMED information request concerning a list of all LANL locations where hazardous waste, mixed waste, and non-hazardous TRU or low level radioactive waste is generated. This list includes sites recorded in WCATS generating waste as of 01-OCT-1979 through the date the query was run (26-JUN-2014.) The information is broken down into columns as follows:
TA = Technical Area
BLDG = Building within the Technical Area
Waste Type = Haz (ardous), MLLW (Mixed Low Level Waste), TRU (Transuranic) and MTRU (Mixed Transuranic.)
First Fiscal Year Generated = Earliest Fiscal Year Generated
Last Fiscal Year Generated = Latest Fiscal Year Generated

TA	BLDG	Waste Type	First Fiscal Year Generated	Last Fiscal Year Generated
53	882	HAZ	1998	1999
53	883	HAZ	1992	1992
53	885	HAZ	1997	1997
53	889	HAZ	1998	1998
53	898	HAZ	1994	1998
53	898	HAZ	1997	1999
53	989	HAZ	1997	1997
53	989	HAZ	1997	1997
53	GEN-AREAS	HAZ	1996	1999
53	GEN-AREAS	HAZ	2005	2011
53	GEN-AREAS	HAZ	1983	2011
53	GEN-AREAS	HAZ	2001	2007
53	LOB	HAZ	1991	1991
53	MP22	HAZ	1992	1992
53	MPF3	HAZ	1992	1993
53	MPF4	HAZ	1992	1992
53	N/A	HAZ	1991	1991
54	1001	HAZ	1991	1996
54	1001	HAZ	1995	1996
54	1001	HAZ	1994	2001
54	1009	HAZ	1998	1999
54	1009	HAZ	1996	1996
54	1009	HAZ	1998	2002
54	1009	HAZ	1996	2003
54	1009	HAZ	1997	1997
54	1009	HAZ	2001	2003
54	1009	HAZ	1998	1999
54	1013	HAZ	1993	1993
54	1024	HAZ	2010	2010
54	1024	HAZ	1996	1996
54	1024	HAZ	1996	2010
54	11	HAZ	2003	2003

Response to the NMED information request concerning a list of all LANL locations where hazardous waste, mixed waste, and non-hazardous TRU or low level radioactive waste is generated. This list includes sites recorded in WCATS generating waste as of 01-OCT-1979 through the date the query was run (26-JUN-2014.) The information is broken down into columns as follows:
TA = Technical Area
BLDG = Building within the Technical Area
Waste Type = Haz (ardous), MLLW (Mixed Low Level Waste), TRU (Transuranic) and MTRU (Mixed Transuranic.)
First Fiscal Year Generated = Earliest Fiscal Year Generated
Last Fiscal Year Generated = Latest Fiscal Year Generated

TA	BLDG	Waste Type	First Fiscal Year Generated	Last Fiscal Year Generated
54	11	HAZ	2003	2003
54	111	HAZ	2003	2003
54	117	HAZ	2009	2009
54	132	HAZ	1991	1991
54	242	HAZ	2000	2000
54	242	HAZ	2000	2000
54	245	HAZ	2001	2001
54	276	HAZ	2013	2013
54	31	HAZ	1999	2000
54	31	HAZ	2001	2001
54	31	HAZ	1999	2000
54	32	HAZ	1994	1995
54	32	HAZ	1991	1991
54	32	HAZ	1995	1995
54	37	HAZ	1989	1995
54	37	HAZ	1995	1995
54	37	HAZ	1995	1995
54	38	HAZ	2007	2011
54	39	HAZ	1993	2012
54	39	HAZ	1998	2013
54	412	HAZ	2001	2001
54	412	HAZ	2001	2001
54	426	HAZ	2007	2009
54	426	HAZ	2008	2008
54	426	HAZ	2004	2010
54	46	HAZ	1997	1997
54	46	HAZ	1997	1997
54	48-P10	HAZ	2009	2009
54	49	HAZ	1998	1998
54	49	HAZ	1998	1998
54	51	HAZ	1992	1992
54	541024	HAZ	1996	1996

Response to the NMED information request concerning a list of all LANL locations where hazardous waste, mixed waste, and non-hazardous TRU or low level radioactive waste is generated. This list includes sites recorded in WCATS generating waste as of 01-OCT-1979 through the date the query was run (26-JUN-2014.) The information is broken down into columns as follows:
TA = Technical Area
BLDG = Building within the Technical Area
Waste Type = Haz (ardous), MLLW (Mixed Low Level Waste), TRU (Transuranic) and MTRU (Mixed Transuranic.)
First Fiscal Year Generated = Earliest Fiscal Year Generated
Last Fiscal Year Generated = Latest Fiscal Year Generated

TA	BLDG	Waste Type	First Fiscal Year Generated	Last Fiscal Year Generated
54	541024	HAZ	1996	1996
54	58	HAZ	1994	1994
54	64	HAZ	1996	1996
54	70	HAZ	2013	2013
54	70	HAZ	1994	1995
54	8	HAZ	1998	2002
54	8	HAZ	1999	2003
54	8	HAZ	2001	2001
54	8	HAZ	1998	2009
54	GEN-AREAS	HAZ	2001	2001
54	GEN-AREAS	HAZ	2005	2005
54	GEN-AREAS	HAZ	1983	2009
54	GEN-AREAS	HAZ	2008	2014
54	GEN-AREAS	HAZ	1994	1995
54	L	HAZ	1992	1992
54-G	20	HAZ	1990	1990
54-G	GEN-AREAS	HAZ	1983	2009
54-G	GEN-AREAS	HAZ	2009	2009
54-G-WEST	1009	HAZ	1997	1999
54-J	124	HAZ	2011	2011
54-J	282	HAZ	2006	2011
54-J	282	HAZ	2011	2011
54-J	GEN-AREAS	HAZ	2012	2012
54-J	GEN-AREAS	HAZ	2004	2012
54-J	GEN-AREAS	HAZ	2010	2012
54-J	GEN-AREAS	HAZ	2005	2005
54-J	RECEIVING	HAZ	2012	2012
54-J	XXX7	HAZ	1990	1990
54-L	1237	HAZ	2007	2009
54-L	216	HAZ	1994	1994
54-L	31	HAZ	1991	1999
54-L	31	HAZ	2008	2008

Response to the NMED information request concerning a list of all LANL locations where hazardous waste, mixed waste, and non-hazardous TRU or low level radioactive waste is generated. This list includes sites recorded in WCATS generating waste as of 01-OCT-1979 through the date the query was run (26-JUN-2014.) The information is broken down into columns as follows:
TA = Technical Area
BLDG = Building within the Technical Area
Waste Type = Haz (ardous), MLLW (Mixed Low Level Waste), TRU (Transuranic) and MTRU (Mixed Transuranic.)
First Fiscal Year Generated = Earliest Fiscal Year Generated
Last Fiscal Year Generated = Latest Fiscal Year Generated

TA	BLDG	Waste Type	First Fiscal Year Generated	Last Fiscal Year Generated
54-L	32	HAZ	1990	1995
54-L	35	HAZ	1990	1991
54-L	36	HAZ	1991	1991
54-L	39	HAZ	1990	2011
54-L	39	HAZ	2008	2011
54-L	39	HAZ	2009	2009
54-L	55	HAZ	1993	1993
54-L	58	HAZ	1991	1991
54-L	68	HAZ	1993	1993
54-L	69	HAZ	1994	1994
54-L	70	HAZ	1994	1995
54-L	70	HAZ	2012	2014
54-L	82	HAZ	1991	1993
54-L	GEN-AREAS	HAZ	1983	2010
54-L	GEN-AREAS	HAZ	2008	2012
54-L	RECEIVING	HAZ	2012	2014
54-L	RECEIVING	HAZ	2012	2014
54-L	YARD	HAZ	1991	1995
55	1	HAZ	1983	2014
55	1	HAZ	1995	1995
55	1	HAZ	1999	1999
55	1	HAZ	2004	2004
55	10	HAZ	1998	1998
55	10	HAZ	2009	2009
55	10	HAZ	2009	2009
55	10	HAZ	1998	1998
55	11	HAZ	1995	1995
55	11	HAZ	1994	1994
55	11	HAZ	1994	1995
55	150	HAZ	1994	1994
55	152	HAZ	1998	1998
55	170	HAZ	1991	1991

Response to the NMED information request concerning a list of all LANL locations where hazardous waste, mixed waste, and non-hazardous TRU or low level radioactive waste is generated. This list includes sites recorded in WCATS generating waste as of 01-OCT-1979 through the date the query was run (26-JUN-2014.) The information is broken down into columns as follows:
TA = Technical Area
BLDG = Building within the Technical Area
Waste Type = Haz (ardous), MLLW (Mixed Low Level Waste), TRU (Transuranic) and MTRU (Mixed Transuranic.)
First Fiscal Year Generated = Earliest Fiscal Year Generated
Last Fiscal Year Generated = Latest Fiscal Year Generated

TA	BLDG	Waste Type	First Fiscal Year Generated	Last Fiscal Year Generated
55	171	HAZ	1993	1995
55	171	HAZ	1992	1995
55	185	HAZ	1998	2006
55	185	HAZ	1998	1998
55	190	HAZ	2010	2010
55	190	HAZ	1993	2011
55	190	HAZ	2010	2010
55	190	HAZ	2008	2008
55	190	HAZ	2008	2012
55	190	HAZ	1999	1999
55	191	HAZ	1993	1997
55	191	HAZ	1998	1998
55	192	HAZ	1998	1999
55	192	HAZ	2001	2001
55	2	HAZ	1986	1989
55	2	HAZ	1991	1991
55	2	HAZ	1995	1996
55	2	HAZ	1994	1994
55	2	HAZ	1998	1998
55	2	HAZ	1999	2002
55	2	HAZ	1994	1994
55	2	HAZ	1991	1991
55	212	HAZ	1992	1992
55	28	HAZ	2002	2002
55	3	HAZ	1985	2008
55	3	HAZ	2009	2009
55	3	HAZ	1996	1998
55	3	HAZ	1999	1999
55	3	HAZ	1996	1996
55	3	HAZ	1995	2012
55	3	HAZ	1997	2007
55	3	HAZ	1998	1998

Response to the NMED information request concerning a list of all LANL locations where hazardous waste, mixed waste, and non-hazardous TRU or low level radioactive waste is generated. This list includes sites recorded in WCATS generating waste as of 01-OCT-1979 through the date the query was run (26-JUN-2014.) The information is broken down into columns as follows:
TA = Technical Area
BLDG = Building within the Technical Area
Waste Type = Haz (ardous), MLLW (Mixed Low Level Waste), TRU (Transuranic) and MTRU (Mixed Transuranic.)
First Fiscal Year Generated = Earliest Fiscal Year Generated
Last Fiscal Year Generated = Latest Fiscal Year Generated

TA	BLDG	Waste Type	First Fiscal Year Generated	Last Fiscal Year Generated
55	3	HAZ	1995	1999
55	3	HAZ	1997	1999
55	3	HAZ	1994	2001
55	3	HAZ	1994	1997
55	3	HAZ	1997	2003
55	3	HAZ	1992	2009
55	3	HAZ	1999	2000
55	3	HAZ	1993	2003
55	3	HAZ	1996	2004
55	3	HAZ	1995	2006
55	3	HAZ	2009	2009
55	3	HAZ	2000	2001
55	3	HAZ	2003	2003
55	3	HAZ	1992	1992
55	3	HAZ	1992	2011
55	3	HAZ	1991	2014
55	3	HAZ	1993	2011
55	3	HAZ	1991	1991
55	3	HAZ	1991	1996
55	3	HAZ	1996	1997
55	3	HAZ	1992	2009
55	3	HAZ	1992	1992
55	3	HAZ	1993	2011
55	3	HAZ	1999	2000
55	3	HAZ	2000	2000
55	3	HAZ	1998	1998
55	3	HAZ	1996	1996
55	3	HAZ	1998	2004
55	3	HAZ	1998	1998
55	3	HAZ	1991	2005
55	3	HAZ	2011	2011
55	3	HAZ	2000	2003

Response to the NMED information request concerning a list of all LANL locations where hazardous waste, mixed waste, and non-hazardous TRU or low level radioactive waste is generated. This list includes sites recorded in WCATS generating waste as of 01-OCT-1979 through the date the query was run (26-JUN-2014.) The information is broken down into columns as follows:
TA = Technical Area
BLDG = Building within the Technical Area
Waste Type = Haz (ardous), MLLW (Mixed Low Level Waste), TRU (Transuranic) and MTRU (Mixed Transuranic.)
First Fiscal Year Generated = Earliest Fiscal Year Generated
Last Fiscal Year Generated = Latest Fiscal Year Generated

TA	BLDG	Waste Type	First Fiscal Year Generated	Last Fiscal Year Generated
55	3	HAZ	1998	1998
55	3	HAZ	2000	2003
55	30	HAZ	1997	1997
55	31	HAZ	2002	2002
55	314	HAZ	1985	1985
55	32	HAZ	1994	1994
55	35	HAZ	2003	2004
55	370	HAZ	1996	1996
55	39	HAZ	2001	2001
55	39	HAZ	2000	2011
55	39	HAZ	2001	2001
55	39	HAZ	1998	1998
55	39	HAZ	1995	2004
55	39	HAZ	2002	2004
55	4	HAZ	1994	2001
55	4	HAZ	1994	2003
55	4	HAZ	1999	2002
55	4	HAZ	1998	1999
55	4	HAZ	1993	1993
55	4	HAZ	1993	1993
55	4	HAZ	1997	1997
55	4	HAZ	2000	2000
55	4	HAZ	2001	2001
55	4	HAZ	1997	1997
55	4	HAZ	2002	2002
55	4	HAZ	2002	2002
55	4	HAZ	2003	2003
55	4	HAZ	2000	2003
55	4	HAZ	1995	1996
55	4	HAZ	1998	1999
55	4	HAZ	1999	1999
55	4	HAZ	1995	1995

Response to the NMED information request concerning a list of all LANL locations where hazardous waste, mixed waste, and non-hazardous TRU or low level radioactive waste is generated. This list includes sites recorded in WCATS generating waste as of 01-OCT-1979 through the date the query was run (26-JUN-2014.) The information is broken down into columns as follows:
TA = Technical Area
BLDG = Building within the Technical Area
Waste Type = Haz (ardous), MLLW (Mixed Low Level Waste), TRU (Transuranic) and MTRU (Mixed Transuranic.)
First Fiscal Year Generated = Earliest Fiscal Year Generated
Last Fiscal Year Generated = Latest Fiscal Year Generated

TA	BLDG	Waste Type	First Fiscal Year Generated	Last Fiscal Year Generated
55	4	HAZ	1997	1997
55	4	HAZ	2002	2002
55	4	HAZ	1999	2004
55	4	HAZ	1998	2004
55	4	HAZ	1997	1999
55	4	HAZ	1994	2012
55	4	HAZ	1996	1996
55	4	HAZ	1998	2001
55	41	HAZ	1999	2000
55	41	HAZ	2008	2008
55	41	HAZ	1999	2008
55	41	HAZ	2008	2008
55	41	HAZ	2000	2000
55	42	HAZ	1986	2003
55	42	HAZ	2002	2002
55	42	HAZ	1992	1992
55	42	HAZ	2005	2005
55	42	HAZ	1994	1996
55	42	HAZ	1996	1996
55	42	HAZ	2012	2012
55	42	HAZ	2003	2003
55	4204	HAZ	1994	1994
55	47	HAZ	2004	2004
55	5	HAZ	1994	2004
55	5	HAZ	1983	2004
55	5	HAZ	2001	2003
55	5	HAZ	1998	1998
55	5	HAZ	1998	1998
55	5	HAZ	1994	1994
55	5	HAZ	2002	2004
55	5	HAZ	2003	2003
55	5	HAZ	1995	1997

Response to the NMED information request concerning a list of all LANL locations where hazardous waste, mixed waste, and non-hazardous TRU or low level radioactive waste is generated. This list includes sites recorded in WCATS generating waste as of 01-OCT-1979 through the date the query was run (26-JUN-2014.) The information is broken down into columns as follows:
TA = Technical Area
BLDG = Building within the Technical Area
Waste Type = Haz (ardous), MLLW (Mixed Low Level Waste), TRU (Transuranic) and MTRU (Mixed Transuranic.)
First Fiscal Year Generated = Earliest Fiscal Year Generated
Last Fiscal Year Generated = Latest Fiscal Year Generated

TA	BLDG	Waste Type	First Fiscal Year Generated	Last Fiscal Year Generated
55	55	HAZ	2002	2003
55	55	HAZ	2005	2005
55	6	HAZ	1987	2008
55	6	HAZ	2008	2008
55	6	HAZ	1998	1998
55	6	HAZ	1998	1998
55	6	HAZ	2012	2012
55	66	HAZ	2004	2004
55	66	HAZ	2000	2001
55	7	HAZ	1994	2000
55	7	HAZ	1997	2000
55	7	HAZ	1997	1997
55	8	HAZ	2007	2007
55	8	HAZ	2007	2007
55	GEN-AREAS	HAZ	1999	1999
55	GEN-AREAS	HAZ	2008	2008
55	GEN-AREAS	HAZ	2012	2012
55	GEN-AREAS	HAZ	1998	2008
55	GEN-AREAS	HAZ	1983	2012
55	GEN-AREAS	HAZ	2013	2013
55	GEN-AREAS	HAZ	2002	2002
55	GEN-AREAS	HAZ	1998	1998
55	GEN-AREAS	HAZ	2000	2003
55	L90-01160	HAZ	2010	2010
55	L90-01160	HAZ	2010	2012
55	L90-01160	HAZ	2012	2013
55	L90-01160	HAZ	2012	2012
55	L90-01160	HAZ	2009	2014
55	L90-01439	HAZ	2010	2012
55	L90-01439	HAZ	2014	2014
55	L90-01439	HAZ	2010	2012
55	L90-01439	HAZ	2009	2014

Response to the NMED information request concerning a list of all LANL locations where hazardous waste, mixed waste, and non-hazardous TRU or low level radioactive waste is generated. This list includes sites recorded in WCATS generating waste as of 01-OCT-1979 through the date the query was run (26-JUN-2014.) The information is broken down into columns as follows:
TA = Technical Area
BLDG = Building within the Technical Area
Waste Type = Haz (ardous), MLLW (Mixed Low Level Waste), TRU (Transuranic) and MTRU (Mixed Transuranic.)
First Fiscal Year Generated = Earliest Fiscal Year Generated
Last Fiscal Year Generated = Latest Fiscal Year Generated

TA	BLDG	Waste Type	First Fiscal Year Generated	Last Fiscal Year Generated
55	L90-01439	HAZ	2012	2013
55	L90-01439	HAZ	2011	2011
55	PAD	HAZ	2003	2014
55	PAD	HAZ	2012	2012
55	PAD	HAZ	2002	2002
55	PAD	HAZ	1994	2003
55	PAD	HAZ	2000	2002
55	PF-3	HAZ	1995	1996
55	PF3	HAZ	1995	1995
55	PF3	HAZ	1996	1996
55	PF3	HAZ	1994	1994
55-PF4	100-AREA	HAZ	1984	1996
55-PF4	200-AREA	HAZ	1990	1992
55-PF4	3	HAZ	1995	1995
55-PF4	3	HAZ	1996	1996
55-PF4	3	HAZ	1995	1995
55-PF4	3	HAZ	1991	1992
55-PF4	3	HAZ	1996	1996
55-PF4	300-AREA	HAZ	1988	1988
55-PF4	300-AREA	HAZ	1998	1998
55-PF4	4	HAZ	1998	2003
55-PF4	4	HAZ	1999	2002
55-PF4	4	HAZ	1998	1999
55-PF4	4	HAZ	1998	1998
55-PF4	4	HAZ	1997	1997
55-PF4	4	HAZ	1994	2000
55-PF4	4	HAZ	1991	1998
55-PF4	4	HAZ	1995	1995
55-PF4	4	HAZ	2001	2001
55-PF4	4	HAZ	1999	1999
55-PF4	4	HAZ	1997	1997
55-PF4	4	HAZ	2001	2001

Response to the NMED information request concerning a list of all LANL locations where hazardous waste, mixed waste, and non-hazardous TRU or low level radioactive waste is generated. This list includes sites recorded in WCATS generating waste as of 01-OCT-1979 through the date the query was run (26-JUN-2014.) The information is broken down into columns as follows:
TA = Technical Area
BLDG = Building within the Technical Area
Waste Type = Haz (ardous), MLLW (Mixed Low Level Waste), TRU (Transuranic) and MTRU (Mixed Transuranic.)
First Fiscal Year Generated = Earliest Fiscal Year Generated
Last Fiscal Year Generated = Latest Fiscal Year Generated

TA	BLDG	Waste Type	First Fiscal Year Generated	Last Fiscal Year Generated
55-PF4	4	HAZ	2002	2002
55-PF4	4	HAZ	1996	1996
55-PF4	4	HAZ	2003	2003
55-PF4	4	HAZ	1999	2003
55-PF4	4	HAZ	1995	1995
55-PF4	4	HAZ	1995	1995
55-PF4	4	HAZ	1998	1999
55-PF4	4	HAZ	1998	1998
55-PF4	4	HAZ	1995	1995
55-PF4	4	HAZ	1997	1997
55-PF4	4	HAZ	2002	2002
55-PF4	4	HAZ	1999	2004
55-PF4	4	HAZ	1996	1996
55-PF4	4	HAZ	1998	2007
55-PF4	4	HAZ	1997	1999
55-PF4	4	HAZ	1993	2001
55-PF4	4	HAZ	1997	1997
55-PF4	4	HAZ	1994	1997
55-PF4	4	HAZ	1996	1996
55-PF4	4	HAZ	1994	2001
55-PF4	4	HAZ	1995	1995
55-PF4	400-AREA	HAZ	1989	2007
55-PF4	460	HAZ	2007	2007
55-PF4	500-AREA	HAZ	1991	1999
55-PF4	500-AREA	HAZ	1998	1998
55-PF4	BASEMENT	HAZ	1998	1998
55-PF4	BASEMENT	HAZ	1988	1995
55-PF4	GEN-AREAS	HAZ	1984	1991
57	17	HAZ	1987	2003
57	17	HAZ	1994	1994
57	17	HAZ	1991	1992
57	17	HAZ	1992	1992

Response to the NMED information request concerning a list of all LANL locations where hazardous waste, mixed waste, and non-hazardous TRU or low level radioactive waste is generated. This list includes sites recorded in WCATS generating waste as of 01-OCT-1979 through the date the query was run (26-JUN-2014.) The information is broken down into columns as follows:
TA = Technical Area
BLDG = Building within the Technical Area
Waste Type = Haz (ardous), MLLW (Mixed Low Level Waste), TRU (Transuranic) and MTRU (Mixed Transuranic.)
First Fiscal Year Generated = Earliest Fiscal Year Generated
Last Fiscal Year Generated = Latest Fiscal Year Generated

TA	BLDG	Waste Type	First Fiscal Year Generated	Last Fiscal Year Generated
57	17	HAZ	1997	1998
57	1700	HAZ	1991	1992
57	1700	HAZ	1991	1991
57	56	HAZ	1990	1999
57	56	HAZ	1999	1999
57	64	HAZ	1995	1995
57	GEN-AREAS	HAZ	1987	2008
59	1	HAZ	1983	2014
59	1	HAZ	1997	1997
59	1	HAZ	1996	1997
59	1	HAZ	1997	2001
59	1	HAZ	1993	2005
59	1	HAZ	2004	2010
59	1	HAZ	2005	2006
59	1	HAZ	1996	1996
59	1	HAZ	1993	2003
59	1	HAZ	1992	2001
59	1	HAZ	1992	2009
59	1	HAZ	1992	2010
59	1	HAZ	1992	2009
59	1	HAZ	1994	2003
59	1	HAZ	2001	2001
59	1	HAZ	1997	2006
59	1	HAZ	2001	2001
59	1	HAZ	2001	2001
59	1	HAZ	1992	2010
59	1	HAZ	1994	2007
59	1	HAZ	1994	2003
59	1	HAZ	2012	2012
59	1	HAZ	1992	2003
59	1	HAZ	1991	1999
59	1	HAZ	1997	1997

Response to the NMED information request concerning a list of all LANL locations where hazardous waste, mixed waste, and non-hazardous TRU or low level radioactive waste is generated. This list includes sites recorded in WCATS generating waste as of 01-OCT-1979 through the date the query was run (26-JUN-2014.) The information is broken down into columns as follows:
TA = Technical Area
BLDG = Building within the Technical Area
Waste Type = Haz (ardous), MLLW (Mixed Low Level Waste), TRU (Transuranic) and MTRU (Mixed Transuranic.)
First Fiscal Year Generated = Earliest Fiscal Year Generated
Last Fiscal Year Generated = Latest Fiscal Year Generated

TA	BLDG	Waste Type	First Fiscal Year Generated	Last Fiscal Year Generated
59	1	HAZ	1997	2002
59	1	HAZ	1998	1998
59	1	HAZ	1999	2000
59	1	HAZ	1999	2001
59	1	HAZ	1991	2004
59	1	HAZ	1999	2003
59	1	HAZ	1991	2009
59	1	HAZ	1996	1997
59	1	HAZ	1995	1999
59	1	HAZ	1993	2003
59	1	HAZ	2003	2003
59	1	HAZ	1992	2002
59	1	HAZ	2004	2009
59	1	HAZ	1998	2001
59	1	HAZ	2007	2007
59	1	HAZ	2007	2008
59	1	HAZ	1999	2000
59	1	HAZ	1999	1999
59	1	HAZ	2000	2002
59	1	HAZ	2002	2002
59	1	HAZ	1997	1997
59	1	HAZ	1991	1994
59	1	HAZ	2009	2014
59	1	HAZ	1999	1999
59	100000	HAZ	1999	1999
59	116	HAZ	1994	1995
59	154	HAZ	2001	2001
59	154	HAZ	1999	2001
59	18	HAZ	1994	1994
59	18	HAZ	1994	1994
59	2	HAZ	1994	1994
59	21	HAZ	2005	2005

Response to the NMED information request concerning a list of all LANL locations where hazardous waste, mixed waste, and non-hazardous TRU or low level radioactive waste is generated. This list includes sites recorded in WCATS generating waste as of 01-OCT-1979 through the date the query was run (26-JUN-2014.) The information is broken down into columns as follows:
TA = Technical Area
BLDG = Building within the Technical Area
Waste Type = Haz (ardous), MLLW (Mixed Low Level Waste), TRU (Transuranic) and MTRU (Mixed Transuranic.)
First Fiscal Year Generated = Earliest Fiscal Year Generated
Last Fiscal Year Generated = Latest Fiscal Year Generated

TA	BLDG	Waste Type	First Fiscal Year Generated	Last Fiscal Year Generated
59	24	HAZ	2001	2001
59	3	HAZ	1990	1990
59	3	HAZ	1992	1992
59	31	HAZ	1997	1997
59	6	HAZ	1993	1993
59	85	HAZ	1999	1999
59	97	HAZ	1998	1998
59	GEN-AREAS	HAZ	1996	1997
59	GEN-AREAS	HAZ	2002	2002
59	GEN-AREAS	HAZ	1995	1997
59	GEN-AREAS	HAZ	1983	2007
59	GEN-AREAS	HAZ	2006	2006
59	OH1	HAZ	1995	1995
59	UWA-01460	HAZ	2009	2009
60	1	HAZ	1991	2014
60	1	HAZ	1998	1998
60	1	HAZ	2009	2013
60	1	HAZ	1992	1999
60	1	HAZ	1991	1991
60	1	HAZ	2000	2000
60	10	HAZ	1990	1990
60	1237	HAZ	1997	1998
60	127	HAZ	2008	2008
60	127	HAZ	2008	2008
60	17	HAZ	1990	1999
60	17	HAZ	1998	1999
60	17	HAZ	1992	1993
60	17	HAZ	1998	1998
60	19	HAZ	1992	1994
60	2	HAZ	1992	2011
60	2	HAZ	2011	2011
60	2	HAZ	2005	2005

Response to the NMED information request concerning a list of all LANL locations where hazardous waste, mixed waste, and non-hazardous TRU or low level radioactive waste is generated. This list includes sites recorded in WCATS generating waste as of 01-OCT-1979 through the date the query was run (26-JUN-2014.) The information is broken down into columns as follows:
TA = Technical Area
BLDG = Building within the Technical Area
Waste Type = Haz (ardous), MLLW (Mixed Low Level Waste), TRU (Transuranic) and MTRU (Mixed Transuranic.)
First Fiscal Year Generated = Earliest Fiscal Year Generated
Last Fiscal Year Generated = Latest Fiscal Year Generated

TA	BLDG	Waste Type	First Fiscal Year Generated	Last Fiscal Year Generated
60	2	HAZ	2000	2000
60	217	HAZ	2006	2006
60	217	HAZ	2006	2006
60	250	HAZ	2010	2010
60	29	HAZ	1994	2011
60	29	HAZ	2014	2014
60	29	HAZ	2009	2011
60	334	HAZ	2001	2001
60	38	HAZ	2002	2002
60	38	HAZ	2011	2012
60	38	HAZ	1998	1998
60	38	HAZ	1992	1992
60	382	HAZ	1991	1991
60	6	HAZ	1999	1999
60	6	HAZ	1999	1999
60	8	HAZ	2001	2001
60	8	HAZ	2002	2002
60	85	HAZ	1998	2004
60	85	HAZ	2000	2000
60	85	HAZ	2000	2000
60	86	HAZ	1998	2014
60	86	HAZ	1998	1998
60	882	HAZ	2000	2000
60	9	HAZ	1994	1994
60	99	HAZ	2007	2007
60	GEN-AREAS	HAZ	1990	2008
60	GEN-AREAS	HAZ	2009	2011
60	GEN-AREAS	HAZ	2001	2004
60	O1	HAZ	1992	1993
61	21	HAZ	1997	1997
61	23	HAZ	1993	2000
61	GEN-AREAS	HAZ	1995	1995

Response to the NMED information request concerning a list of all LANL locations where hazardous waste, mixed waste, and non-hazardous TRU or low level radioactive waste is generated. This list includes sites recorded in WCATS generating waste as of 01-OCT-1979 through the date the query was run (26-JUN-2014.) The information is broken down into columns as follows:
TA = Technical Area
BLDG = Building within the Technical Area
Waste Type = Haz (ardous), MLLW (Mixed Low Level Waste), TRU (Transuranic) and MTRU (Mixed Transuranic.)
First Fiscal Year Generated = Earliest Fiscal Year Generated
Last Fiscal Year Generated = Latest Fiscal Year Generated

TA	BLDG	Waste Type	First Fiscal Year Generated	Last Fiscal Year Generated
61	N/A	HAZ	1991	1991
63	1	HAZ	1993	1995
63	11	HAZ	1992	1993
63	2	HAZ	1991	1992
63	3	HAZ	1991	1994
63	3	HAZ	1997	1997
63	3	HAZ	1997	1997
63	382	HAZ	1991	1991
63	41	HAZ	1998	1998
63	5	HAZ	1991	1993
63	5	HAZ	1992	1992
63	GEN-AREAS	HAZ	1990	1993
64	1	HAZ	1991	1991
64	1	HAZ	2007	2007
64	39	HAZ	2011	2012
64	64	HAZ	1995	1995
64	64	HAZ	2003	2003
64	64	HAZ	2009	2012
64	68	HAZ	2009	2009
64	GEN-AREAS	HAZ	2000	2001
64	GEN-AREAS	HAZ	1993	1994
69	1	HAZ	2008	2008
69	3	HAZ	2003	2003
69	3	HAZ	2004	2004
72	12	HAZ	2005	2005
72	1237	HAZ	1996	1996
72	GEN-AREAS	HAZ	2005	2007
73	73004	HAZ	1996	1997
95	21	HAZ	2003	2003
00	1	LLW	2011	2011
00	1	LLW	2002	2006
00	1	LLW	2008	2008

Response to the NMED information request concerning a list of all LANL locations where hazardous waste, mixed waste, and non-hazardous TRU or low level radioactive waste is generated. This list includes sites recorded in WCATS generating waste as of 01-OCT-1979 through the date the query was run (26-JUN-2014.) The information is broken down into columns as follows:
TA = Technical Area
BLDG = Building within the Technical Area
Waste Type = Haz (ardous), MLLW (Mixed Low Level Waste), TRU (Transuranic) and MTRU (Mixed Transuranic.)
First Fiscal Year Generated = Earliest Fiscal Year Generated
Last Fiscal Year Generated = Latest Fiscal Year Generated

TA	BLDG	Waste Type	First Fiscal Year Generated	Last Fiscal Year Generated
00	1	LLW	2008	2008
00	1001	LLW	2002	2002
00	1009	LLW	2008	2008
00	155	LLW	2010	2010
00	199	LLW	1990	1990
00	215	LLW	2004	2004
00	247	LLW	1997	1997
00	256	LLW	1986	1986
00	271	LLW	2000	2000
00	29	LLW	2008	2009
00	29	LLW	2008	2008
00	29	LLW	2010	2010
00	30	LLW	1996	1996
00	4	LLW	2008	2008
00	4	LLW	2008	2008
00	495	LLW	1995	1995
00	534	LLW	2012	2012
00	66	LLW	2008	2008
00	GEN-AREAS	LLW	2005	2005
00	GEN-AREAS	LLW	1980	2012
00	GEN-AREAS	LLW	2006	2008
00	GEN-AREAS	LLW	2003	2007
00	GEN-AREAS	LLW	1999	2007
00	GEN-AREAS	LLW	2013	2013
00	GEN-AREAS	LLW	2013	2013
00	OOOO	LLW	1993	1993
01	1	LLW	2003	2003
01	1001	LLW	1995	1996
01	GEN-AREAS	LLW	1980	1997
01	GEN-AREAS	LLW	1999	1999
02	1	LLW	1992	2003
02	1	LLW	1991	1994

Response to the NMED information request concerning a list of all LANL locations where hazardous waste, mixed waste, and non-hazardous TRU or low level radioactive waste is generated. This list includes sites recorded in WCATS generating waste as of 01-OCT-1979 through the date the query was run (26-JUN-2014.) The information is broken down into columns as follows:
TA = Technical Area
BLDG = Building within the Technical Area
Waste Type = Haz (ardous), MLLW (Mixed Low Level Waste), TRU (Transuranic) and MTRU (Mixed Transuranic.)
First Fiscal Year Generated = Earliest Fiscal Year Generated
Last Fiscal Year Generated = Latest Fiscal Year Generated

TA	BLDG	Waste Type	First Fiscal Year Generated	Last Fiscal Year Generated
02	1	LLW	1994	1995
02	1	LLW	2003	2003
02	1	LLW	1993	1997
02	1	LLW	1994	1995
02	1	LLW	1993	1993
02	1	LLW	1997	1997
02	1	LLW	2000	2003
02	1	LLW	1994	2003
02	1	LLW	1994	2004
02	4	LLW	2000	2000
02	44	LLW	1993	2001
02	49	LLW	2000	2001
02	50	LLW	1991	1993
02	50	LLW	1994	1994
02	GEN-AREAS	LLW	2011	2011
02	GEN-AREAS	LLW	1980	2011
02	GEN-AREAS	LLW	2001	2003
02	GEN-AREAS	LLW	1994	1994
02	Y	LLW	1992	1992
03	1	LLW	1996	2002
03	1	LLW	2014	2014
03	102	LLW	1980	2002
03	102	LLW	1992	1992
03	102	LLW	1994	1995
03	102	LLW	1991	2014
03	102	LLW	1991	1993
03	102	LLW	1992	1993
03	102	LLW	1992	1992
03	102	LLW	1999	2000
03	102	LLW	1998	1998
03	102	LLW	1993	1993
03	105	LLW	1991	1991

Response to the NMED information request concerning a list of all LANL locations where hazardous waste, mixed waste, and non-hazardous TRU or low level radioactive waste is generated. This list includes sites recorded in WCATS generating waste as of 01-OCT-1979 through the date the query was run (26-JUN-2014.) The information is broken down into columns as follows:
TA = Technical Area
BLDG = Building within the Technical Area
Waste Type = Haz (ardous), MLLW (Mixed Low Level Waste), TRU (Transuranic) and MTRU (Mixed Transuranic.)
First Fiscal Year Generated = Earliest Fiscal Year Generated
Last Fiscal Year Generated = Latest Fiscal Year Generated

TA	BLDG	Waste Type	First Fiscal Year Generated	Last Fiscal Year Generated
03	1076	LLW	2009	2009
03	123	LLW	1990	1990
03	130	LLW	1983	1983
03	132	LLW	1981	1989
03	1353	LLW	1990	1990
03	141	LLW	1994	1995
03	141	LLW	1980	1990
03	141	LLW	1999	2000
03	141	LLW	1994	1995
03	141	LLW	1992	1992
03	141	LLW	1992	1993
03	141	LLW	1997	1998
03	142	LLW	1981	1991
03	142	LLW	1992	1994
03	1462	LLW	1988	1988
03	1522	LLW	2012	2012
03	154	LLW	1982	1982
03	159	LLW	1999	2008
03	159	LLW	1999	2001
03	159	LLW	2001	2001
03	1593	LLW	1993	1993
03	16	LLW	1980	2011
03	16	LLW	1996	1996
03	16	LLW	1993	1995
03	16	LLW	1996	1996
03	16	LLW	1999	1999
03	16	LLW	2010	2010
03	16	LLW	2007	2007
03	16	LLW	1995	1996
03	16	LLW	1998	2000
03	16	LLW	1999	2000
03	16	LLW	1992	1994

Response to the NMED information request concerning a list of all LANL locations where hazardous waste, mixed waste, and non-hazardous TRU or low level radioactive waste is generated. This list includes sites recorded in WCATS generating waste as of 01-OCT-1979 through the date the query was run (26-JUN-2014.) The information is broken down into columns as follows:
TA = Technical Area
BLDG = Building within the Technical Area
Waste Type = Haz (ardous), MLLW (Mixed Low Level Waste), TRU (Transuranic) and MTRU (Mixed Transuranic.)
First Fiscal Year Generated = Earliest Fiscal Year Generated
Last Fiscal Year Generated = Latest Fiscal Year Generated

TA	BLDG	Waste Type	First Fiscal Year Generated	Last Fiscal Year Generated
03	164	LLW	1980	1995
03	164	LLW	1992	1992
03	164	LLW	1994	1994
03	169	LLW	1980	2000
03	1698	LLW	1996	1997
03	17	LLW	1991	1991
03	170	LLW	1980	1989
03	2009	LLW	2013	2013
03	2010	LLW	2010	2010
03	2010	LLW	2013	2013
03	206	LLW	1985	1986
03	207	LLW	1985	1985
03	213	LLW	1996	1996
03	215	LLW	2002	2003
03	215	LLW	2003	2003
03	216	LLW	1980	2009
03	216	LLW	1993	1994
03	216	LLW	2009	2009
03	216	LLW	2013	2013
03	216	LLW	2009	2009
03	2160	LLW	1994	1994
03	218	LLW	1981	1990
03	218	LLW	1996	1996
03	22	LLW	1981	1991
03	223	LLW	1981	1991
03	2237	LLW	1996	1996
03	2322	LLW	2009	2009
03	24	LLW	1980	1989
03	24	LLW	1995	1995
03	253	LLW	1981	1988
03	261	LLW	1986	1986
03	271	LLW	1980	2005

Response to the NMED information request concerning a list of all LANL locations where hazardous waste, mixed waste, and non-hazardous TRU or low level radioactive waste is generated. This list includes sites recorded in WCATS generating waste as of 01-OCT-1979 through the date the query was run (26-JUN-2014.) The information is broken down into columns as follows:
TA = Technical Area
BLDG = Building within the Technical Area
Waste Type = Haz (ardous), MLLW (Mixed Low Level Waste), TRU (Transuranic) and MTRU (Mixed Transuranic.)
First Fiscal Year Generated = Earliest Fiscal Year Generated
Last Fiscal Year Generated = Latest Fiscal Year Generated

TA	BLDG	Waste Type	First Fiscal Year Generated	Last Fiscal Year Generated
03	271	LLW	2000	2000
03	271	LLW	2000	2000
03	271	LLW	1999	2006
03	28	LLW	1987	1990
03	28	LLW	1994	1994
03	281	LLW	2002	2002
03	281	LLW	2006	2006
03	281	LLW	2002	2009
03	281	LLW	2009	2009
03	29	LLW	1992	1992
03	29	LLW	2009	2014
03	29	LLW	2003	2009
03	29	LLW	1997	2012
03	29	LLW	1992	1997
03	29	LLW	2012	2012
03	29	LLW	2012	2014
03	294	LLW	1989	1990
03	3	LLW	1992	1992
03	3	LLW	1993	1993
03	30	LLW	1980	2012
03	30	LLW	1992	1993
03	30	LLW	1998	1998
03	30	LLW	2003	2007
03	30	LLW	1994	1994
03	30	LLW	1993	1993
03	30374	LLW	2001	2001
03	30374	LLW	2001	2001
03	316	LLW	1984	1984
03	317	LLW	2002	2002
03	32	LLW	1980	1988
03	32	LLW	1992	1993
03	32	LLW	1993	1993

Response to the NMED information request concerning a list of all LANL locations where hazardous waste, mixed waste, and non-hazardous TRU or low level radioactive waste is generated. This list includes sites recorded in WCATS generating waste as of 01-OCT-1979 through the date the query was run (26-JUN-2014.) The information is broken down into columns as follows:
TA = Technical Area
BLDG = Building within the Technical Area
Waste Type = Haz (ardous), MLLW (Mixed Low Level Waste), TRU (Transuranic) and MTRU (Mixed Transuranic.)
First Fiscal Year Generated = Earliest Fiscal Year Generated
Last Fiscal Year Generated = Latest Fiscal Year Generated

TA	BLDG	Waste Type	First Fiscal Year Generated	Last Fiscal Year Generated
03	34	LLW	1980	1991
03	34	LLW	2002	2003
03	34	LLW	1999	2000
03	34	LLW	1991	1993
03	34	LLW	1993	2007
03	34	LLW	1999	2000
03	34	LLW	2003	2003
03	34	LLW	2000	2008
03	34	LLW	2000	2000
03	34	LLW	2004	2004
03	35	LLW	1980	1991
03	35	LLW	2003	2003
03	35	LLW	1992	1992
03	35	LLW	2003	2009
03	35	LLW	2002	2002
03	37	LLW	1984	1984
03	38	LLW	1981	1993
03	38	LLW	1993	1993
03	39	LLW	1980	1992
03	39	LLW	1997	1998
03	39	LLW	1992	1992
03	39	LLW	2004	2004
03	39	LLW	2001	2001
03	39	LLW	1997	1998
03	39	LLW	1992	1992
03	4	LLW	2011	2011
03	4	LLW	1994	1994
03	4	LLW	2011	2011
03	40	LLW	1980	1999
03	40	LLW	1992	1994
03	40	LLW	1996	1999
03	40	LLW	1999	1999

Response to the NMED information request concerning a list of all LANL locations where hazardous waste, mixed waste, and non-hazardous TRU or low level radioactive waste is generated. This list includes sites recorded in WCATS generating waste as of 01-OCT-1979 through the date the query was run (26-JUN-2014.) The information is broken down into columns as follows:
TA = Technical Area
BLDG = Building within the Technical Area
Waste Type = Haz (ardous), MLLW (Mixed Low Level Waste), TRU (Transuranic) and MTRU (Mixed Transuranic.)
First Fiscal Year Generated = Earliest Fiscal Year Generated
Last Fiscal Year Generated = Latest Fiscal Year Generated

TA	BLDG	Waste Type	First Fiscal Year Generated	Last Fiscal Year Generated
03	40	LLW	2004	2004
03	40	LLW	1999	1999
03	40	LLW	1994	1995
03	40	LLW	1996	1996
03	40	LLW	1992	1993
03	40	LLW	1995	1995
03	40	LLW	1992	1992
03	40	LLW	1999	1999
03	40	LLW	1992	1992
03	40	LLW	1999	1999
03	40	LLW	2003	2004
03	40	LLW	2011	2011
03	40	LLW	1993	2003
03	40	LLW	1992	1995
03	40	LLW	1995	1995
03	409	LLW	1996	1996
03	409	LLW	1993	1995
03	410	LLW	1983	1989
03	422	LLW	1983	1990
03	43	LLW	1980	1991
03	43	LLW	1992	1992
03	468	LLW	1990	1990
03	49	LLW	2001	2001
03	494	LLW	1990	1990
03	514	LLW	1996	1997
03	65	LLW	1980	1995
03	65	LLW	1994	1995
03	66	LLW	1992	1995
03	66	LLW	1980	2012
03	66	LLW	1995	1995
03	66	LLW	1995	2001
03	66	LLW	1996	2011

Response to the NMED information request concerning a list of all LANL locations where hazardous waste, mixed waste, and non-hazardous TRU or low level radioactive waste is generated. This list includes sites recorded in WCATS generating waste as of 01-OCT-1979 through the date the query was run (26-JUN-2014.) The information is broken down into columns as follows:
TA = Technical Area
BLDG = Building within the Technical Area
Waste Type = Haz (ardous), MLLW (Mixed Low Level Waste), TRU (Transuranic) and MTRU (Mixed Transuranic.)
First Fiscal Year Generated = Earliest Fiscal Year Generated
Last Fiscal Year Generated = Latest Fiscal Year Generated

TA	BLDG	Waste Type	First Fiscal Year Generated	Last Fiscal Year Generated
03	66	LLW	1992	1992
03	66	LLW	1992	1992
03	66	LLW	1996	1996
03	66	LLW	2004	2004
03	66	LLW	1992	1992
03	66	LLW	1992	1992
03	66	LLW	1994	1994
03	66	LLW	1994	2012
03	66	LLW	2000	2000
03	66	LLW	1993	2010
03	66	LLW	1992	1992
03	66	LLW	1994	2012
03	66	LLW	1993	1993
03	66	LLW	1992	1993
03	66	LLW	2000	2000
03	66	LLW	1992	1994
03	66	LLW	1994	1995
03	66	LLW	1994	1994
03	66	LLW	1993	1994
03	66	LLW	2003	2003
03	66	LLW	2008	2008
03	66	LLW	2000	2002
03	66	LLW	2000	2000
03	66	LLW	1993	1994
03	66	LLW	1993	1993
03	66	LLW	2002	2006
03	66	LLW	1992	1992
03	66	LLW	1997	1997
03	66	LLW	1993	2006
03	66	LLW	1994	2008
03	66	LLW	2004	2004
03	69	LLW	1992	1992

Response to the NMED information request concerning a list of all LANL locations where hazardous waste, mixed waste, and non-hazardous TRU or low level radioactive waste is generated. This list includes sites recorded in WCATS generating waste as of 01-OCT-1979 through the date the query was run (26-JUN-2014.) The information is broken down into columns as follows:
TA = Technical Area
BLDG = Building within the Technical Area
Waste Type = Haz (ardous), MLLW (Mixed Low Level Waste), TRU (Transuranic) and MTRU (Mixed Transuranic.)
First Fiscal Year Generated = Earliest Fiscal Year Generated
Last Fiscal Year Generated = Latest Fiscal Year Generated

TA	BLDG	Waste Type	First Fiscal Year Generated	Last Fiscal Year Generated
03	7	LLW	1991	1992
03	85	LLW	2000	2000
03	85	LLW	2000	2000
03	GEN-AREAS	LLW	2009	2014
03	GEN-AREAS	LLW	1980	2013
03	GEN-AREAS	LLW	2000	2012
03	GEN-AREAS	LLW	2010	2011
03	SM2197	LLW	1996	1996
03	SM2197	LLW	1995	1995
03	SM40	LLW	1996	1996
03-CMR	102	LLW	1997	2001
03-CMR	14	LLW	1993	1996
03-CMR	281	LLW	1999	2010
03-CMR	281	LLW	2001	2001
03-CMR	281	LLW	2009	2009
03-CMR	281	LLW	1998	2010
03-CMR	29	LLW	1996	1996
03-CMR	29	LLW	1993	1993
03-CMR	29	LLW	1992	1995
03-CMR	29	LLW	1992	1994
03-CMR	29	LLW	1996	1996
03-CMR	29	LLW	1995	1999
03-CMR	29	LLW	2000	2000
03-CMR	29	LLW	2002	2004
03-CMR	29	LLW	1997	1999
03-CMR	29	LLW	1996	1996
03-CMR	29	LLW	1993	1993
03-CMR	29	LLW	1996	1996
03-CMR	29	LLW	1996	1996
03-CMR	29	LLW	1996	1997
03-CMR	29	LLW	1993	1996
03-CMR	29	LLW	1995	1995

Response to the NMED information request concerning a list of all LANL locations where hazardous waste, mixed waste, and non-hazardous TRU or low level radioactive waste is generated. This list includes sites recorded in WCATS generating waste as of 01-OCT-1979 through the date the query was run (26-JUN-2014.) The information is broken down into columns as follows:
TA = Technical Area
BLDG = Building within the Technical Area
Waste Type = Haz (ardous), MLLW (Mixed Low Level Waste), TRU (Transuranic) and MTRU (Mixed Transuranic.)
First Fiscal Year Generated = Earliest Fiscal Year Generated
Last Fiscal Year Generated = Latest Fiscal Year Generated

TA	BLDG	Waste Type	First Fiscal Year Generated	Last Fiscal Year Generated
03-CMR	29	LLW	1993	1994
03-CMR	29	LLW	1999	1999
03-CMR	29	LLW	1996	1999
03-CMR	29	LLW	1997	1997
03-CMR	29	LLW	1993	2000
03-CMR	29	LLW	1993	1994
03-CMR	29	LLW	1996	1996
03-CMR	29	LLW	1992	1992
03-CMR	29	LLW	1993	1993
03-CMR	29	LLW	1999	1999
03-CMR	29	LLW	2002	2002
03-CMR	29	LLW	1997	1998
03-CMR	29	LLW	1994	1994
03-CMR	29	LLW	1995	1998
03-CMR	29	LLW	1994	1994
03-CMR	29	LLW	1994	1996
03-CMR	29	LLW	1995	1995
03-CMR	29	LLW	1995	1995
03-CMR	29	LLW	1994	2000
03-CMR	29	LLW	1994	1994
03-CMR	29	LLW	1995	1995
03-CMR	29	LLW	2003	2003
03-CMR	29	LLW	2000	2001
03-CMR	29	LLW	1996	1997
03-CMR	29	LLW	1996	1997
03-CMR	29	LLW	1998	1999
03-CMR	29	LLW	1994	1994
03-CMR	29	LLW	1997	1997
03-CMR	29	LLW	1996	1997
03-CMR	29	LLW	2004	2004
03-CMR	29	LLW	1994	1994
03-CMR	29	LLW	1994	1994

Response to the NMED information request concerning a list of all LANL locations where hazardous waste, mixed waste, and non-hazardous TRU or low level radioactive waste is generated. This list includes sites recorded in WCATS generating waste as of 01-OCT-1979 through the date the query was run (26-JUN-2014.) The information is broken down into columns as follows:
TA = Technical Area
BLDG = Building within the Technical Area
Waste Type = Haz (ardous), MLLW (Mixed Low Level Waste), TRU (Transuranic) and MTRU (Mixed Transuranic.)
First Fiscal Year Generated = Earliest Fiscal Year Generated
Last Fiscal Year Generated = Latest Fiscal Year Generated

TA	BLDG	Waste Type	First Fiscal Year Generated	Last Fiscal Year Generated
03-CMR	29	LLW	1993	1993
03-CMR	29	LLW	1997	1997
03-CMR	29	LLW	1994	1994
03-CMR	29	LLW	1993	1993
03-CMR	29	LLW	1993	1998
03-CMR	29	LLW	2001	2001
03-CMR	29	LLW	1995	1995
03-CMR	29	LLW	1996	1996
03-CMR	29	LLW	1996	1997
03-CMR	29	LLW	1993	1994
03-CMR	29	LLW	1994	1995
03-CMR	29	LLW	1995	1995
03-CMR	29	LLW	1996	1996
03-CMR	29	LLW	1997	1999
03-CMR	29	LLW	1997	2000
03-CMR	29	LLW	2002	2002
03-CMR	29	LLW	1993	1994
03-CMR	29	LLW	1994	1994
03-CMR	29	LLW	1993	1997
03-CMR	29	LLW	1992	1996
03-CMR	29	LLW	2003	2005
03-CMR	29	LLW	1994	1999
03-CMR	29	LLW	1999	1999
03-CMR	29	LLW	2002	2009
03-CMR	29	LLW	2011	2011
03-CMR	29	LLW	1996	2010
03-CMR	29	LLW	1996	2006
03-CMR	29	LLW	1997	2003
03-CMR	29	LLW	1994	1995
03-CMR	29	LLW	1994	2012
03-CMR	29	LLW	1995	1998
03-CMR	29	LLW	2005	2011

Response to the NMED information request concerning a list of all LANL locations where hazardous waste, mixed waste, and non-hazardous TRU or low level radioactive waste is generated. This list includes sites recorded in WCATS generating waste as of 01-OCT-1979 through the date the query was run (26-JUN-2014.) The information is broken down into columns as follows:
TA = Technical Area
BLDG = Building within the Technical Area
Waste Type = Haz (ardous), MLLW (Mixed Low Level Waste), TRU (Transuranic) and MTRU (Mixed Transuranic.)
First Fiscal Year Generated = Earliest Fiscal Year Generated
Last Fiscal Year Generated = Latest Fiscal Year Generated

TA	BLDG	Waste Type	First Fiscal Year Generated	Last Fiscal Year Generated
03-CMR	29	LLW	1998	2012
03-CMR	29	LLW	1996	1996
03-CMR	29	LLW	2001	2001
03-CMR	29	LLW	1994	2008
03-CMR	29	LLW	1995	1995
03-CMR	29	LLW	2010	2011
03-CMR	29	LLW	1995	1995
03-CMR	29	LLW	1992	1998
03-CMR	29	LLW	1994	1995
03-CMR	29	LLW	1997	1997
03-CMR	29	LLW	1992	1993
03-CMR	29	LLW	1994	1994
03-CMR	29	LLW	2005	2005
03-CMR	29	LLW	2001	2002
03-CMR	29	LLW	2001	2002
03-CMR	29	LLW	2010	2011
03-CMR	29	LLW	1997	1998
03-CMR	29	LLW	1996	2008
03-CMR	29	LLW	1993	1995
03-CMR	29	LLW	1991	1997
03-CMR	29	LLW	1995	1996
03-CMR	29	LLW	1995	1996
03-CMR	29	LLW	1994	1997
03-CMR	29	LLW	1995	1997
03-CMR	29	LLW	1996	1997
03-CMR	29	LLW	1996	1998
03-CMR	29	LLW	1995	2004
03-CMR	29	LLW	1999	1999
03-CMR	29	LLW	1994	2011
03-CMR	29	LLW	2011	2012
03-CMR	39	LLW	2005	2005
03-CMR	39	LLW	2001	2001

Response to the NMED information request concerning a list of all LANL locations where hazardous waste, mixed waste, and non-hazardous TRU or low level radioactive waste is generated. This list includes sites recorded in WCATS generating waste as of 01-OCT-1979 through the date the query was run (26-JUN-2014.) The information is broken down into columns as follows:
TA = Technical Area
BLDG = Building within the Technical Area
Waste Type = Haz (ardous), MLLW (Mixed Low Level Waste), TRU (Transuranic) and MTRU (Mixed Transuranic.)
First Fiscal Year Generated = Earliest Fiscal Year Generated
Last Fiscal Year Generated = Latest Fiscal Year Generated

TA	BLDG	Waste Type	First Fiscal Year Generated	Last Fiscal Year Generated
03-CMR	425	LLW	1993	1993
03-CMR	GEN-AREAS	LLW	2006	2006
03-CMR	GEN-AREAS	LLW	1980	2009
03-CMR	WING1	LLW	1985	1989
03-CMR	WING2	LLW	1985	1996
03-CMR	WING3	LLW	1985	1992
03-CMR	WING4	LLW	1986	1999
03-CMR	WING5	LLW	1998	1998
03-CMR	WING5	LLW	1985	2006
03-CMR	WING7	LLW	1985	1995
03-CMR	WING9	LLW	1985	2008
03-CMR	WINGA	LLW	1985	1990
03-CMR	WSUP	LLW	1985	1995
04	1	LLW	2001	2001
04	GEN-AREAS	LLW	1980	1985
05	1	LLW	2011	2011
05	27	LLW	1999	1999
05	281	LLW	2000	2000
05	GEN-AREAS	LLW	2009	2009
05	GEN-AREAS	LLW	1980	2011
05	GEN-AREAS	LLW	2001	2011
05	GEN-AREAS	LLW	2011	2011
06	12	LLW	2004	2004
06	GEN-AREAS	LLW	1980	1994
08	1	LLW	1994	1994
08	1	LLW	1999	1999
08	101	LLW	1988	1988
08	21	LLW	1980	1984
08	22	LLW	1984	1990
08	22	LLW	1993	1993
08	22	LLW	2007	2007
08	22	LLW	1992	1992

Response to the NMED information request concerning a list of all LANL locations where hazardous waste, mixed waste, and non-hazardous TRU or low level radioactive waste is generated. This list includes sites recorded in WCATS generating waste as of 01-OCT-1979 through the date the query was run (26-JUN-2014.) The information is broken down into columns as follows:
TA = Technical Area
BLDG = Building within the Technical Area
Waste Type = Haz (ardous), MLLW (Mixed Low Level Waste), TRU (Transuranic) and MTRU (Mixed Transuranic.)
First Fiscal Year Generated = Earliest Fiscal Year Generated
Last Fiscal Year Generated = Latest Fiscal Year Generated

TA	BLDG	Waste Type	First Fiscal Year Generated	Last Fiscal Year Generated
08	23	LLW	1980	1985
08	26	LLW	1996	1996
08	31	LLW	1993	1993
08	32	LLW	2001	2001
08	410	LLW	1993	1993
08	65	LLW	1992	1993
08	65	LLW	1999	1999
08	70	LLW	1980	2003
08	GEN-AREAS	LLW	1980	2005
09	21	LLW	1982	1990
09	21	LLW	1994	1994
09	21	LLW	1994	1994
09	21	LLW	2004	2005
09	28	LLW	1982	1982
09	281	LLW	2003	2003
09	29	LLW	1983	1983
09	30	LLW	1996	2003
09	30	LLW	2005	2005
09	30	LLW	1996	1996
09	32	LLW	1996	1996
09	32	LLW	1982	1996
09	32	LLW	1993	2001
09	32	LLW	2003	2003
09	33	LLW	1981	1981
09	34	LLW	1982	1982
09	38	LLW	1982	1982
09	39	LLW	1982	1982
09	40	LLW	1984	1984
09	42	LLW	2007	2007
09	43	LLW	1994	1994
09	45	LLW	1981	1981
09	46	LLW	1987	1990

Response to the NMED information request concerning a list of all LANL locations where hazardous waste, mixed waste, and non-hazardous TRU or low level radioactive waste is generated. This list includes sites recorded in WCATS generating waste as of 01-OCT-1979 through the date the query was run (26-JUN-2014.) The information is broken down into columns as follows:
TA = Technical Area
BLDG = Building within the Technical Area
Waste Type = Haz (ardous), MLLW (Mixed Low Level Waste), TRU (Transuranic) and MTRU (Mixed Transuranic.)
First Fiscal Year Generated = Earliest Fiscal Year Generated
Last Fiscal Year Generated = Latest Fiscal Year Generated

TA	BLDG	Waste Type	First Fiscal Year Generated	Last Fiscal Year Generated
09	48	LLW	1981	1981
09	51	LLW	1994	1994
09	9013	LLW	1996	1996
09	GEN-AREAS	LLW	1982	1986
10	10001	LLW	1996	1997
10	GEN-AREAS	LLW	1996	2010
11	24	LLW	1990	1997
11	30	LLW	1983	1994
11	GEN-AREAS	LLW	1983	1990
12	GEN-AREAS	LLW	1980	1996
14	14	LLW	1998	1998
14	14	LLW	1997	1998
14	23	LLW	1986	2007
14	34	LLW	1989	1989
14	43	LLW	1996	1996
14	GEN-AREAS	LLW	2012	2012
14	GEN-AREAS	LLW	1982	2008
15	15	LLW	1997	1998
15	183	LLW	1980	2004
15	183	LLW	1994	1995
15	183	LLW	1993	1995
15	183	LLW	1998	1999
15	183	LLW	1995	1997
15	184	LLW	1996	1996
15	184	LLW	1980	2004
15	184	LLW	2004	2004
15	184	LLW	1996	1996
15	185	LLW	1980	2008
15	185	LLW	2004	2004
15	186	LLW	1980	1989
15	193	LLW	2000	2000
15	22	LLW	2007	2007

Response to the NMED information request concerning a list of all LANL locations where hazardous waste, mixed waste, and non-hazardous TRU or low level radioactive waste is generated. This list includes sites recorded in WCATS generating waste as of 01-OCT-1979 through the date the query was run (26-JUN-2014.) The information is broken down into columns as follows:
TA = Technical Area
BLDG = Building within the Technical Area
Waste Type = Haz (ardous), MLLW (Mixed Low Level Waste), TRU (Transuranic) and MTRU (Mixed Transuranic.)
First Fiscal Year Generated = Earliest Fiscal Year Generated
Last Fiscal Year Generated = Latest Fiscal Year Generated

TA	BLDG	Waste Type	First Fiscal Year Generated	Last Fiscal Year Generated
15	233	LLW	1983	2012
15	242	LLW	2005	2009
15	27	LLW	1991	1991
15	280	LLW	1982	1988
15	285	LLW	1983	2004
15	287	LLW	1993	1993
15	3	LLW	2007	2007
15	306	LLW	1993	1995
15	306	LLW	1984	2013
15	306	LLW	1991	1993
15	310	LLW	1989	2012
15	310	LLW	2004	2004
15	312	LLW	2004	2004
15	312	LLW	2004	2007
15	312	LLW	2002	2007
15	312	LLW	2004	2004
15	312	LLW	2002	2009
15	312	LLW	2004	2004
15	312	LLW	2004	2007
15	312	LLW	2002	2006
15	312	LLW	2001	2001
15	315	LLW	2007	2007
15	315	LLW	2007	2007
15	4	LLW	2006	2006
15	41	LLW	2013	2013
15	44	LLW	1983	1989
15	44	LLW	2001	2001
15	446	LLW	2003	2004
15	45	LLW	1981	1982
15	534	LLW	2007	2007
15	534	LLW	2008	2013
15	534	LLW	2013	2013

Response to the NMED information request concerning a list of all LANL locations where hazardous waste, mixed waste, and non-hazardous TRU or low level radioactive waste is generated. This list includes sites recorded in WCATS generating waste as of 01-OCT-1979 through the date the query was run (26-JUN-2014.) The information is broken down into columns as follows:
TA = Technical Area
BLDG = Building within the Technical Area
Waste Type = Haz (ardous), MLLW (Mixed Low Level Waste), TRU (Transuranic) and MTRU (Mixed Transuranic.)
First Fiscal Year Generated = Earliest Fiscal Year Generated
Last Fiscal Year Generated = Latest Fiscal Year Generated

TA	BLDG	Waste Type	First Fiscal Year Generated	Last Fiscal Year Generated
15	6	LLW	2007	2009
15	7	LLW	2007	2007
15	GEN-AREAS	LLW	2002	2010
15	GEN-AREAS	LLW	1980	2013
15	GEN-AREAS	LLW	1998	2001
15	GEN-AREAS	LLW	2011	2011
16	102	LLW	1998	1998
16	1469	LLW	2011	2011
16	16	LLW	1990	1990
16	193	LLW	1999	2000
16	200	LLW	1982	1988
16	202	LLW	1980	2005
16	202	LLW	2004	2005
16	202	LLW	2007	2014
16	202	LLW	2011	2011
16	202	LLW	2007	2008
16	204	LLW	1993	1993
16	205	LLW	1990	2014
16	205	LLW	2010	2010
16	205	LLW	1992	2007
16	205	LLW	1995	2014
16	205	LLW	1999	2012
16	205	LLW	2009	2009
16	205	LLW	2010	2010
16	205	LLW	1992	1995
16	205	LLW	2009	2011
16	205	LLW	2011	2014
16	207	LLW	1980	1991
16	207	LLW	2010	2010
16	207	LLW	1999	1999
16	243	LLW	1991	1993
16	248	LLW	1995	1996

Response to the NMED information request concerning a list of all LANL locations where hazardous waste, mixed waste, and non-hazardous TRU or low level radioactive waste is generated. This list includes sites recorded in WCATS generating waste as of 01-OCT-1979 through the date the query was run (26-JUN-2014.) The information is broken down into columns as follows:
TA = Technical Area
BLDG = Building within the Technical Area
Waste Type = Haz (ardous), MLLW (Mixed Low Level Waste), TRU (Transuranic) and MTRU (Mixed Transuranic.)
First Fiscal Year Generated = Earliest Fiscal Year Generated
Last Fiscal Year Generated = Latest Fiscal Year Generated

TA	BLDG	Waste Type	First Fiscal Year Generated	Last Fiscal Year Generated
16	248	LLW	1993	1998
16	260	LLW	1980	1987
16	267	LLW	1994	1995
16	280	LLW	1982	1982
16	281	LLW	2001	2005
16	283	LLW	1981	1981
16	3	LLW	1994	1995
16	300	LLW	1984	1985
16	302	LLW	1986	1987
16	302	LLW	2007	2008
16	304	LLW	1980	1984
16	304	LLW	2012	2012
16	305	LLW	1986	1986
16	306	LLW	1981	1988
16	332	LLW	2009	2010
16	332	LLW	2010	2010
16	332	LLW	2010	2010
16	332	LLW	2003	2005
16	360	LLW	1981	1982
16	380	LLW	1981	1982
16	387	LLW	1993	1993
16	4	LLW	2001	2001
16	400	LLW	1981	1988
16	410	LLW	1983	1993
16	410	LLW	1998	2009
16	410	LLW	1998	1998
16	411	LLW	2007	2007
16	414	LLW	2001	2001
16	414	LLW	2000	2000
16	414	LLW	1999	2001
16	414	LLW	1999	1999
16	430	LLW	1980	1983

Response to the NMED information request concerning a list of all LANL locations where hazardous waste, mixed waste, and non-hazardous TRU or low level radioactive waste is generated. This list includes sites recorded in WCATS generating waste as of 01-OCT-1979 through the date the query was run (26-JUN-2014.) The information is broken down into columns as follows:
TA = Technical Area
BLDG = Building within the Technical Area
Waste Type = Haz (ardous), MLLW (Mixed Low Level Waste), TRU (Transuranic) and MTRU (Mixed Transuranic.)
First Fiscal Year Generated = Earliest Fiscal Year Generated
Last Fiscal Year Generated = Latest Fiscal Year Generated

TA	BLDG	Waste Type	First Fiscal Year Generated	Last Fiscal Year Generated
16	450	LLW	1983	1984
16	450	LLW	1996	1996
16	460	LLW	1981	1982
16	460	LLW	2002	2004
16	54	LLW	1981	1988
16	86	LLW	2002	2002
16	88	LLW	1987	2003
16	88	LLW	2000	2003
16	88	LLW	2007	2008
16	GEN-AREAS	LLW	2011	2011
16	GEN-AREAS	LLW	1980	2011
16	GEN-AREAS	LLW	2000	2011
16	GEN-AREAS	LLW	2011	2011
18	1	LLW	1980	1998
18	1	LLW	1998	1998
18	1	LLW	1997	1998
18	116	LLW	1981	2008
18	116	LLW	1995	1996
18	116	LLW	1992	1992
18	119	LLW	2008	2010
18	122	LLW	2004	2004
18	127	LLW	1980	1987
18	127	LLW	1999	1999
18	128	LLW	1981	1981
18	129	LLW	1981	1981
18	141	LLW	1984	1984
18	168	LLW	1980	1998
18	184	LLW	1990	1990
18	2	LLW	1998	1998
18	21	LLW	1996	1997
18	23	LLW	1980	1996
18	23	LLW	1996	1996

Response to the NMED information request concerning a list of all LANL locations where hazardous waste, mixed waste, and non-hazardous TRU or low level radioactive waste is generated. This list includes sites recorded in WCATS generating waste as of 01-OCT-1979 through the date the query was run (26-JUN-2014.) The information is broken down into columns as follows:
TA = Technical Area
BLDG = Building within the Technical Area
Waste Type = Haz (ardous), MLLW (Mixed Low Level Waste), TRU (Transuranic) and MTRU (Mixed Transuranic.)
First Fiscal Year Generated = Earliest Fiscal Year Generated
Last Fiscal Year Generated = Latest Fiscal Year Generated

TA	BLDG	Waste Type	First Fiscal Year Generated	Last Fiscal Year Generated
18	23	LLW	1999	1999
18	246	LLW	1996	1996
18	247	LLW	1999	1999
18	248	LLW	1999	1999
18	251	LLW	1991	1991
18	28	LLW	1982	1992
18	28	LLW	1992	1992
18	28	LLW	1991	1995
18	28	LLW	1992	1992
18	281	LLW	2010	2010
18	281	LLW	2009	2009
18	286	LLW	2008	2008
18	29	LLW	1982	1982
18	29	LLW	1992	1993
18	29	LLW	1992	1992
18	3	LLW	1999	1999
18	30	LLW	1992	1992
18	30	LLW	1980	2009
18	30	LLW	2009	2009
18	30	LLW	2009	2011
18	32	LLW	1998	1999
18	32	LLW	1998	1999
18	32	LLW	1999	2009
18	32	LLW	1980	2014
18	32	LLW	1995	2010
18	32	LLW	1999	1999
18	32	LLW	1999	2009
18	32	LLW	2010	2010
18	32	LLW	2010	2011
18	88	LLW	1999	1999
18	GEN-AREAS	LLW	1998	2011
18	GEN-AREAS	LLW	1980	2013

Response to the NMED information request concerning a list of all LANL locations where hazardous waste, mixed waste, and non-hazardous TRU or low level radioactive waste is generated. This list includes sites recorded in WCATS generating waste as of 01-OCT-1979 through the date the query was run (26-JUN-2014.) The information is broken down into columns as follows:
TA = Technical Area
BLDG = Building within the Technical Area
Waste Type = Haz (ardous), MLLW (Mixed Low Level Waste), TRU (Transuranic) and MTRU (Mixed Transuranic.)
First Fiscal Year Generated = Earliest Fiscal Year Generated
Last Fiscal Year Generated = Latest Fiscal Year Generated

TA	BLDG	Waste Type	First Fiscal Year Generated	Last Fiscal Year Generated
18	GEN-AREAS	LLW	1997	2009
18	GEN-AREAS	LLW	2011	2011
18	RSTO-05583	LLW	2011	2011
20	GEN-AREAS	LLW	1985	1985
21	1	LLW	1991	1992
21	1	LLW	1992	1992
21	1	LLW	2009	2009
21	102	LLW	2000	2000
21	1106	LLW	1998	1998
21	116	LLW	1980	2010
21	14	LLW	1994	1994
21	14	LLW	1993	1994
21	14	LLW	1994	1997
21	146	LLW	1996	1996
21	149	LLW	1983	2011
21	150	LLW	1997	1997
21	150	LLW	1980	2011
21	150	LLW	2002	2002
21	150	LLW	1992	1993
21	150	LLW	1997	1998
21	150	LLW	1992	1995
21	150	LLW	1992	1995
21	150	LLW	1995	1995
21	150	LLW	1993	1993
21	152	LLW	1980	2011
21	152	LLW	1993	1993
21	152	LLW	1997	1997
21	152	LLW	1997	1997
21	152	LLW	1992	1992
21	152	LLW	1992	1992
21	152	LLW	1996	2001
21	152	LLW	1997	1997

Response to the NMED information request concerning a list of all LANL locations where hazardous waste, mixed waste, and non-hazardous TRU or low level radioactive waste is generated. This list includes sites recorded in WCATS generating waste as of 01-OCT-1979 through the date the query was run (26-JUN-2014.) The information is broken down into columns as follows:
TA = Technical Area
BLDG = Building within the Technical Area
Waste Type = Haz (ardous), MLLW (Mixed Low Level Waste), TRU (Transuranic) and MTRU (Mixed Transuranic.)
First Fiscal Year Generated = Earliest Fiscal Year Generated
Last Fiscal Year Generated = Latest Fiscal Year Generated

TA	BLDG	Waste Type	First Fiscal Year Generated	Last Fiscal Year Generated
21	152	LLW	1998	1998
21	152	LLW	1997	1997
21	152	LLW	1999	2008
21	152	LLW	1997	2001
21	155	LLW	1997	2004
21	155	LLW	1998	2006
21	155	LLW	2002	2006
21	155	LLW	1992	2006
21	155	LLW	2009	2011
21	155	LLW	1994	1994
21	155	LLW	1993	2006
21	155	LLW	2001	2001
21	155	LLW	2001	2001
21	155	LLW	1997	2008
21	155N	LLW	1994	1994
21	16	LLW	2004	2005
21	16	LLW	2003	2003
21	16	LLW	2003	2004
21	2	LLW	1996	1996
21	2	LLW	1997	1997
21	2	LLW	1992	1992
21	2	LLW	1995	1995
21	2	LLW	1999	2007
21	200	LLW	1999	1999
21	205	LLW	2004	2004
21	205	LLW	2004	2005
21	209	LLW	1980	2012
21	209	LLW	1993	1995
21	209	LLW	1996	1996
21	209	LLW	1994	1995
21	209	LLW	1999	1999
21	209	LLW	2005	2005

Response to the NMED information request concerning a list of all LANL locations where hazardous waste, mixed waste, and non-hazardous TRU or low level radioactive waste is generated. This list includes sites recorded in WCATS generating waste as of 01-OCT-1979 through the date the query was run (26-JUN-2014.) The information is broken down into columns as follows:
TA = Technical Area
BLDG = Building within the Technical Area
Waste Type = Haz (ardous), MLLW (Mixed Low Level Waste), TRU (Transuranic) and MTRU (Mixed Transuranic.)
First Fiscal Year Generated = Earliest Fiscal Year Generated
Last Fiscal Year Generated = Latest Fiscal Year Generated

TA	BLDG	Waste Type	First Fiscal Year Generated	Last Fiscal Year Generated
21	209	LLW	1992	1992
21	209	LLW	2002	2003
21	209	LLW	1995	1997
21	209	LLW	1992	2006
21	209	LLW	1998	1998
21	209	LLW	1997	1997
21	209	LLW	1994	2008
21	21	LLW	2009	2009
21	21	LLW	1996	1996
21	21	LLW	2005	2005
21	210	LLW	2010	2010
21	21011	LLW	1996	1997
21	21013	LLW	1996	1996
21	21024	LLW	1996	1996
21	212	LLW	1980	2002
21	212520	LLW	1996	1996
21	228	LLW	2001	2003
21	228	LLW	1992	1995
21	229	LLW	1988	1988
21	229	LLW	2012	2012
21	257	LLW	1980	2011
21	257	LLW	2002	2010
21	257	LLW	1994	1994
21	257	LLW	2004	2012
21	257	LLW	1992	2011
21	281	LLW	2002	2005
21	281	LLW	2010	2010
21	281	LLW	2002	2005
21	286	LLW	1980	1991
21	3	LLW	1996	1997
21	3	LLW	1992	1994
21	3	LLW	1992	1992

Response to the NMED information request concerning a list of all LANL locations where hazardous waste, mixed waste, and non-hazardous TRU or low level radioactive waste is generated. This list includes sites recorded in WCATS generating waste as of 01-OCT-1979 through the date the query was run (26-JUN-2014.) The information is broken down into columns as follows:
TA = Technical Area
BLDG = Building within the Technical Area
Waste Type = Haz (ardous), MLLW (Mixed Low Level Waste), TRU (Transuranic) and MTRU (Mixed Transuranic.)
First Fiscal Year Generated = Earliest Fiscal Year Generated
Last Fiscal Year Generated = Latest Fiscal Year Generated

TA	BLDG	Waste Type	First Fiscal Year Generated	Last Fiscal Year Generated
21	3	LLW	1992	1995
21	3	LLW	1994	1994
21	3	LLW	1993	1993
21	3	LLW	1995	1995
21	3	LLW	1995	1995
21	3	LLW	1996	1996
21	3	LLW	1995	1997
21	31	LLW	1980	1998
21	31	LLW	1992	1992
21	315	LLW	2002	2002
21	315	LLW	1997	1998
21	357	LLW	2009	2009
21	3N	LLW	1995	1995
21	3N	LLW	1992	1992
21	3N	LLW	1992	1992
21	4	LLW	1993	1995
21	4	LLW	1995	1995
21	4	LLW	1992	1995
21	4	LLW	1992	1998
21	425	LLW	1992	1993
21	49	LLW	1988	1997
21	49	LLW	2000	2000
21	495	LLW	1994	1995
21	4N	LLW	1991	1995
21	5	LLW	1980	2011
21	5	LLW	2011	2011
21	5	LLW	1992	1992
21	5	LLW	1993	1993
21	5	LLW	1997	1998
21	5	LLW	1992	1998
21	5	LLW	1992	1992
21	5	LLW	1992	1992

Response to the NMED information request concerning a list of all LANL locations where hazardous waste, mixed waste, and non-hazardous TRU or low level radioactive waste is generated. This list includes sites recorded in WCATS generating waste as of 01-OCT-1979 through the date the query was run (26-JUN-2014.) The information is broken down into columns as follows:
TA = Technical Area
BLDG = Building within the Technical Area
Waste Type = Haz (ardous), MLLW (Mixed Low Level Waste), TRU (Transuranic) and MTRU (Mixed Transuranic.)
First Fiscal Year Generated = Earliest Fiscal Year Generated
Last Fiscal Year Generated = Latest Fiscal Year Generated

TA	BLDG	Waste Type	First Fiscal Year Generated	Last Fiscal Year Generated
21	86	LLW	2001	2001
21	GEN-AREAS	LLW	2006	2011
21	GEN-AREAS	LLW	2011	2011
21	GEN-AREAS	LLW	2000	2003
21	GEN-AREAS	LLW	1980	2012
21	GEN-AREAS	LLW	1997	1998
21	GEN-AREAS	LLW	2000	2012
21	GEN-AREAS	LLW	2007	2008
21	GEN-AREAS	LLW	1993	1993
21	GEN-AREAS	LLW	2011	2011
21	STAGEP39N	LLW	2014	2014
22	1	LLW	1985	1998
22	23	LLW	1983	1983
22	34	LLW	1980	1985
22	5	LLW	1981	1985
22	52	LLW	1984	1991
22	68	LLW	1982	1982
22	GEN-AREAS	LLW	1983	1987
23	GEN-AREAS	LLW	1981	1981
26	GEN-AREAS	LLW	2011	2011
26	GEN-AREAS	LLW	2008	2008
27	257	LLW	1997	1997
27	GEN-AREAS	LLW	1997	2003
29	GEN-AREAS	LLW	1983	1987
30	409	LLW	1996	1996
32	32002	LLW	1996	1996
32	GEN-AREAS	LLW	1987	2010
33	113	LLW	1987	1991
33	114	LLW	1998	1998
33	114	LLW	2000	2010
33	155	LLW	2002	2002
33	16	LLW	1998	1998

Response to the NMED information request concerning a list of all LANL locations where hazardous waste, mixed waste, and non-hazardous TRU or low level radioactive waste is generated. This list includes sites recorded in WCATS generating waste as of 01-OCT-1979 through the date the query was run (26-JUN-2014.) The information is broken down into columns as follows:
TA = Technical Area
BLDG = Building within the Technical Area
Waste Type = Haz (ardous), MLLW (Mixed Low Level Waste), TRU (Transuranic) and MTRU (Mixed Transuranic.)
First Fiscal Year Generated = Earliest Fiscal Year Generated
Last Fiscal Year Generated = Latest Fiscal Year Generated

TA	BLDG	Waste Type	First Fiscal Year Generated	Last Fiscal Year Generated
33	19	LLW	1983	1983
33	2	LLW	1998	1998
33	20	LLW	1980	1983
33	205	LLW	2002	2002
33	22	LLW	2004	2007
33	22	LLW	2007	2007
33	23	LLW	1986	1986
33	24	LLW	1988	1988
33	25	LLW	1980	2010
33	39	LLW	1998	1998
33	6	LLW	1998	1998
33	86	LLW	1998	1998
33	86	LLW	2000	2000
33	86	LLW	1996	2003
33	86	LLW	1994	1994
33	86	LLW	1994	1996
33	86	LLW	1996	1996
33	86	LLW	1995	1995
33	86	LLW	1998	2003
33	86	LLW	1992	2008
33	86	LLW	1992	1998
33	GEN-AREAS	LLW	1980	2010
33	GEN-AREAS	LLW	1997	2008
35	1	LLW	1980	1988
35	1	LLW	1994	1994
35	1	LLW	2008	2008
35	1	LLW	2010	2010
35	125	LLW	1983	2013
35	125	LLW	1996	1996
35	125	LLW	1993	1994
35	125	LLW	2007	2007
35	125	LLW	1994	1994

Response to the NMED information request concerning a list of all LANL locations where hazardous waste, mixed waste, and non-hazardous TRU or low level radioactive waste is generated. This list includes sites recorded in WCATS generating waste as of 01-OCT-1979 through the date the query was run (26-JUN-2014.) The information is broken down into columns as follows:
TA = Technical Area
BLDG = Building within the Technical Area
Waste Type = Haz (ardous), MLLW (Mixed Low Level Waste), TRU (Transuranic) and MTRU (Mixed Transuranic.)
First Fiscal Year Generated = Earliest Fiscal Year Generated
Last Fiscal Year Generated = Latest Fiscal Year Generated

TA	BLDG	Waste Type	First Fiscal Year Generated	Last Fiscal Year Generated
35	126	LLW	1983	1983
35	128	LLW	1984	1996
35	128	LLW	1996	1996
35	128	LLW	1996	1996
35	180	LLW	1995	1995
35	180	LLW	1995	1995
35	189	LLW	1999	1999
35	2	LLW	1980	2007
35	2	LLW	2001	2001
35	2	LLW	1992	1997
35	2	LLW	1996	1997
35	2	LLW	1995	1995
35	2	LLW	1996	1996
35	2	LLW	1996	2002
35	2	LLW	1996	1996
35	2	LLW	1999	2013
35	2	LLW	1991	1991
35	2	LLW	1992	1994
35	2	LLW	1997	1997
35	2	LLW	1995	1995
35	2	LLW	2003	2004
35	2	LLW	2004	2014
35	2	LLW	1993	2002
35	2	LLW	1995	1996
35	2	LLW	1992	1992
35	2	LLW	2002	2002
35	2	LLW	1997	1997
35	2	LLW	2007	2007
35	2	LLW	2013	2013
35	2	LLW	2007	2010
35	213	LLW	1984	2006
35	213	LLW	1996	1996

Response to the NMED information request concerning a list of all LANL locations where hazardous waste, mixed waste, and non-hazardous TRU or low level radioactive waste is generated. This list includes sites recorded in WCATS generating waste as of 01-OCT-1979 through the date the query was run (26-JUN-2014.) The information is broken down into columns as follows:
TA = Technical Area
BLDG = Building within the Technical Area
Waste Type = Haz (ardous), MLLW (Mixed Low Level Waste), TRU (Transuranic) and MTRU (Mixed Transuranic.)
First Fiscal Year Generated = Earliest Fiscal Year Generated
Last Fiscal Year Generated = Latest Fiscal Year Generated

TA	BLDG	Waste Type	First Fiscal Year Generated	Last Fiscal Year Generated
35	213	LLW	1996	1996
35	213	LLW	1992	1992
35	213	LLW	1992	1994
35	213	LLW	1991	1992
35	213	LLW	2006	2006
35	213	LLW	1991	1993
35	213	LLW	1993	1997
35	213	LLW	1992	1993
35	213	LLW	2003	2003
35	213	LLW	1996	2008
35	215	LLW	1999	1999
35	250	LLW	1990	1990
35	27	LLW	1980	2007
35	27	LLW	1998	1999
35	27	LLW	1999	2001
35	27	LLW	1992	1992
35	27	LLW	1993	1993
35	27	LLW	2000	2000
35	27	LLW	1993	1993
35	27	LLW	2006	2008
35	27	LLW	1998	1998
35	281	LLW	2007	2007
35	29	LLW	1980	1990
35	3	LLW	1995	1997
35	3	LLW	1995	1995
35	34	LLW	1984	1993
35	34	LLW	1997	1997
35	35	LLW	1980	1988
35	374	LLW	2003	2009
35	455	LLW	2013	2014
35	46	LLW	1980	1980
35	67	LLW	1980	1983

Response to the NMED information request concerning a list of all LANL locations where hazardous waste, mixed waste, and non-hazardous TRU or low level radioactive waste is generated. This list includes sites recorded in WCATS generating waste as of 01-OCT-1979 through the date the query was run (26-JUN-2014.) The information is broken down into columns as follows:
TA = Technical Area
BLDG = Building within the Technical Area
Waste Type = Haz (ardous), MLLW (Mixed Low Level Waste), TRU (Transuranic) and MTRU (Mixed Transuranic.)
First Fiscal Year Generated = Earliest Fiscal Year Generated
Last Fiscal Year Generated = Latest Fiscal Year Generated

TA	BLDG	Waste Type	First Fiscal Year Generated	Last Fiscal Year Generated
35	7	LLW	1995	1997
35	85	LLW	1982	2008
35	85	LLW	2007	2007
35	86	LLW	1980	1985
35	87	LLW	1980	2008
35	87	LLW	1992	1993
35	GEN-AREAS	LLW	1980	2008
35	GEN-AREAS	LLW	2010	2010
36	1	LLW	1982	2008
36	1	LLW	2004	2011
36	1	LLW	2004	2011
36	1	LLW	2003	2003
36	1	LLW	2010	2010
36	102	LLW	1991	1991
36	103	LLW	1990	1990
36	104	LLW	1991	2005
36	11	LLW	1989	2008
36	12	LLW	1982	2004
36	12	LLW	2009	2010
36	12	LLW	2004	2004
36	125	LLW	1999	1999
36	213	LLW	2009	2009
36	213	LLW	2010	2010
36	242	LLW	2009	2009
36	3	LLW	1987	1990
36	3	LLW	2006	2011
36	3	LLW	2007	2011
36	310	LLW	2011	2011
36	312	LLW	2004	2004
36	312	LLW	2009	2011
36	312	LLW	2009	2011
36	312	LLW	2007	2011

Response to the NMED information request concerning a list of all LANL locations where hazardous waste, mixed waste, and non-hazardous TRU or low level radioactive waste is generated. This list includes sites recorded in WCATS generating waste as of 01-OCT-1979 through the date the query was run (26-JUN-2014.) The information is broken down into columns as follows:
TA = Technical Area
BLDG = Building within the Technical Area
Waste Type = Haz (ardous), MLLW (Mixed Low Level Waste), TRU (Transuranic) and MTRU (Mixed Transuranic.)
First Fiscal Year Generated = Earliest Fiscal Year Generated
Last Fiscal Year Generated = Latest Fiscal Year Generated

TA	BLDG	Waste Type	First Fiscal Year Generated	Last Fiscal Year Generated
36	312	LLW	2009	2011
36	315	LLW	2008	2008
36	406	LLW	2010	2010
36	46	LLW	1982	1984
36	48	LLW	2004	2009
36	534	LLW	2010	2010
36	55	LLW	1983	1989
36	55	LLW	1996	1997
36	6	LLW	2006	2011
36	7	LLW	1989	2007
36	7	LLW	2007	2007
36	8	LLW	1981	1996
36	8	LLW	2007	2011
36	83	LLW	1995	1995
36	86	LLW	2014	2014
36	88	LLW	2009	2009
36	9	LLW	1998	1998
36	90	LLW	2010	2010
36	GEN-AREAS	LLW	1980	2013
36	GEN-AREAS	LLW	1997	1997
36	RSTO-03730	LLW	2009	2009
36	RSTO-03742	LLW	2009	2011
37	10	LLW	2005	2006
37	25	LLW	2006	2006
37	GEN-AREAS	LLW	2005	2006
38	159	LLW	1999	2008
39	142	LLW	1997	1998
39	2	LLW	1981	1992
39	2	LLW	1991	1993
39	2	LLW	2004	2004
39	2	LLW	1991	1993
39	2	LLW	2011	2011

Response to the NMED information request concerning a list of all LANL locations where hazardous waste, mixed waste, and non-hazardous TRU or low level radioactive waste is generated. This list includes sites recorded in WCATS generating waste as of 01-OCT-1979 through the date the query was run (26-JUN-2014.) The information is broken down into columns as follows:
TA = Technical Area
BLDG = Building within the Technical Area
Waste Type = Haz (ardous), MLLW (Mixed Low Level Waste), TRU (Transuranic) and MTRU (Mixed Transuranic.)
First Fiscal Year Generated = Earliest Fiscal Year Generated
Last Fiscal Year Generated = Latest Fiscal Year Generated

TA	BLDG	Waste Type	First Fiscal Year Generated	Last Fiscal Year Generated
39	2	LLW	1991	1992
39	39	LLW	1997	1997
39	39002	LLW	1996	1996
39	56	LLW	1989	1996
39	57	LLW	1991	2010
39	57	LLW	2008	2009
39	6	LLW	1986	1994
39	6	LLW	1993	1993
39	62	LLW	1986	1986
39	63	LLW	1984	1984
39	64	LLW	1989	1990
39	69	LLW	1984	1987
39	69	LLW	2005	2006
39	69	LLW	1991	1992
39	88	LLW	2007	2007
39	88	LLW	1992	1994
39	GEN-AREAS	LLW	1992	1992
39	GEN-AREAS	LLW	1982	2011
39	GEN-AREAS	LLW	1997	2008
40	1	LLW	1986	1986
40	16	LLW	1982	1982
40	2	LLW	1985	1985
40	23	LLW	1985	1988
40	23	LLW	1992	1992
40	4	LLW	2006	2006
40	41	LLW	1986	2011
40	72	LLW	2002	2002
40	GEN-AREAS	LLW	1990	1990
41	1	LLW	1980	1991
41	1	LLW	1992	1994
41	1	LLW	2012	2012
41	11	LLW	1995	1995

Response to the NMED information request concerning a list of all LANL locations where hazardous waste, mixed waste, and non-hazardous TRU or low level radioactive waste is generated. This list includes sites recorded in WCATS generating waste as of 01-OCT-1979 through the date the query was run (26-JUN-2014.) The information is broken down into columns as follows:
TA = Technical Area
BLDG = Building within the Technical Area
Waste Type = Haz (ardous), MLLW (Mixed Low Level Waste), TRU (Transuranic) and MTRU (Mixed Transuranic.)
First Fiscal Year Generated = Earliest Fiscal Year Generated
Last Fiscal Year Generated = Latest Fiscal Year Generated

TA	BLDG	Waste Type	First Fiscal Year Generated	Last Fiscal Year Generated
41	2	LLW	1995	1995
41	243	LLW	1992	1992
41	3	LLW	1982	2000
41	3	LLW	1999	2000
41	30	LLW	1994	1994
41	30	LLW	1998	2001
41	4	LLW	1980	2002
41	4	LLW	2002	2002
41	4	LLW	1991	1993
41	4	LLW	1993	1993
41	4	LLW	1991	1993
41	4	LLW	2002	2003
41	4	LLW	1993	1993
41	4	LLW	1994	1994
41	4	LLW	1994	1994
41	4	LLW	2001	2001
41	51	LLW	1996	1996
41	6	LLW	2003	2003
41	GEN-AREAS	LLW	1980	2010
43	1	LLW	1980	2009
43	1	LLW	1993	1996
43	1	LLW	1993	1993
43	1	LLW	1993	1999
43	1	LLW	1998	2009
43	1	LLW	1996	1996
43	1	LLW	1992	1999
43	1	LLW	1995	1995
43	1	LLW	2007	2008
43	1	LLW	2007	2008
43	1	LLW	1991	1991
43	1	LLW	1993	1993
43	1	LLW	2007	2007

Response to the NMED information request concerning a list of all LANL locations where hazardous waste, mixed waste, and non-hazardous TRU or low level radioactive waste is generated. This list includes sites recorded in WCATS generating waste as of 01-OCT-1979 through the date the query was run (26-JUN-2014.) The information is broken down into columns as follows:
TA = Technical Area
BLDG = Building within the Technical Area
Waste Type = Haz (ardous), MLLW (Mixed Low Level Waste), TRU (Transuranic) and MTRU (Mixed Transuranic.)
First Fiscal Year Generated = Earliest Fiscal Year Generated
Last Fiscal Year Generated = Latest Fiscal Year Generated

TA	BLDG	Waste Type	First Fiscal Year Generated	Last Fiscal Year Generated
43	1	LLW	1997	1997
43	1	LLW	1992	2005
43	1	LLW	1993	1993
43	1	LLW	1993	1993
43	1	LLW	1993	1994
43	1	LLW	1993	1993
43	1	LLW	1999	2004
43	1	LLW	1994	1994
43	12	LLW	2009	2009
43	12	LLW	2009	2009
43	19	LLW	1994	1994
43	20	LLW	1992	1994
43	28	LLW	2008	2008
43	281	LLW	2005	2005
43	281	LLW	1999	1999
43	47	LLW	2007	2007
43	49	LLW	1998	1998
43	61	LLW	2008	2008
43	GEN-AREAS	LLW	2007	2007
43	GEN-AREAS	LLW	1980	1992
45	24	LLW	2000	2000
45	GEN-AREAS	LLW	1992	1992
45	GEN-AREAS	LLW	1982	1982
46	1	LLW	1980	1991
46	1	LLW	1994	1994
46	1	LLW	1993	1994
46	1	LLW	1991	1991
46	1	LLW	2000	2000
46	119	LLW	1981	1986
46	154	LLW	1981	1990
46	154	LLW	2002	2002
46	154	LLW	1995	1995

Response to the NMED information request concerning a list of all LANL locations where hazardous waste, mixed waste, and non-hazardous TRU or low level radioactive waste is generated. This list includes sites recorded in WCATS generating waste as of 01-OCT-1979 through the date the query was run (26-JUN-2014.) The information is broken down into columns as follows:
TA = Technical Area
BLDG = Building within the Technical Area
Waste Type = Haz (ardous), MLLW (Mixed Low Level Waste), TRU (Transuranic) and MTRU (Mixed Transuranic.)
First Fiscal Year Generated = Earliest Fiscal Year Generated
Last Fiscal Year Generated = Latest Fiscal Year Generated

TA	BLDG	Waste Type	First Fiscal Year Generated	Last Fiscal Year Generated
46	158	LLW	1986	1996
46	158	LLW	2001	2001
46	16	LLW	1980	1991
46	161	LLW	1995	1995
46	161	LLW	1995	1995
46	181	LLW	1991	1992
46	195	LLW	1985	1985
46	2	LLW	1985	1985
46	200	LLW	2008	2008
46	200	LLW	2005	2006
46	200	LLW	2008	2008
46	200	LLW	2007	2009
46	231	LLW	2003	2003
46	24	LLW	1980	1991
46	24	LLW	1992	1992
46	24	LLW	2002	2004
46	24	LLW	1992	2001
46	24	LLW	1994	1995
46	25	LLW	1980	2001
46	25	LLW	1992	1992
46	25	LLW	1993	1994
46	25	LLW	1999	2003
46	250000	LLW	1998	2004
46	281	LLW	2004	2004
46	30	LLW	1980	1990
46	30	LLW	2010	2010
46	31	LLW	1980	1992
46	31	LLW	1995	1995
46	31	LLW	2007	2007
46	31	LLW	1993	1993
46	31	LLW	1994	1994
46	31	LLW	1995	1996

Response to the NMED information request concerning a list of all LANL locations where hazardous waste, mixed waste, and non-hazardous TRU or low level radioactive waste is generated. This list includes sites recorded in WCATS generating waste as of 01-OCT-1979 through the date the query was run (26-JUN-2014.) The information is broken down into columns as follows:
TA = Technical Area
BLDG = Building within the Technical Area
Waste Type = Haz (ardous), MLLW (Mixed Low Level Waste), TRU (Transuranic) and MTRU (Mixed Transuranic.)
First Fiscal Year Generated = Earliest Fiscal Year Generated
Last Fiscal Year Generated = Latest Fiscal Year Generated

TA	BLDG	Waste Type	First Fiscal Year Generated	Last Fiscal Year Generated
46	31	LLW	1993	1995
46	3164	LLW	1991	1991
46	36	LLW	1987	1995
46	41	LLW	1980	1990
46	41	LLW	2005	2006
46	41	LLW	1993	1994
46	42	LLW	1984	1984
46	463	LLW	2012	2012
46	571	LLW	2006	2006
46	571	LLW	2006	2007
46	58	LLW	1994	1996
46	58	LLW	1994	1994
46	59	LLW	1980	1993
46	69	LLW	2008	2008
46	75	LLW	1980	1997
46	75	LLW	1993	1996
46	75	LLW	1995	1996
46	76	LLW	1993	1993
46	76	LLW	1982	1982
46	77	LLW	1980	1980
46	88	LLW	1981	1996
46	GEN-AREAS	LLW	2011	2011
46	GEN-AREAS	LLW	1980	2011
46	NA	LLW	1995	1995
48	1	LLW	1980	2012
48	1	LLW	1993	1993
48	1	LLW	1994	1995
48	1	LLW	2001	2001
48	1	LLW	2003	2009
48	1	LLW	1998	2014
48	1	LLW	1992	1995
48	1	LLW	1995	2002

Response to the NMED information request concerning a list of all LANL locations where hazardous waste, mixed waste, and non-hazardous TRU or low level radioactive waste is generated. This list includes sites recorded in WCATS generating waste as of 01-OCT-1979 through the date the query was run (26-JUN-2014.) The information is broken down into columns as follows:
TA = Technical Area
BLDG = Building within the Technical Area
Waste Type = Haz (ardous), MLLW (Mixed Low Level Waste), TRU (Transuranic) and MTRU (Mixed Transuranic.)
First Fiscal Year Generated = Earliest Fiscal Year Generated
Last Fiscal Year Generated = Latest Fiscal Year Generated

TA	BLDG	Waste Type	First Fiscal Year Generated	Last Fiscal Year Generated
48	1	LLW	1994	2003
48	1	LLW	2001	2001
48	1	LLW	2003	2007
48	1	LLW	1995	2005
48	1	LLW	1999	2002
48	1	LLW	1999	2003
48	1	LLW	1995	1995
48	1	LLW	2000	2001
48	1	LLW	1998	2003
48	1	LLW	1996	1998
48	1	LLW	1994	1995
48	1	LLW	1995	2002
48	1	LLW	1999	2004
48	1	LLW	1995	1999
48	1	LLW	1996	1996
48	1	LLW	1994	2002
48	1	LLW	1992	1992
48	1	LLW	1995	1996
48	1	LLW	1998	1998
48	1	LLW	1992	1998
48	1	LLW	1992	2011
48	1	LLW	1992	1995
48	1	LLW	1995	1995
48	1	LLW	1995	2011
48	1	LLW	1992	1995
48	1	LLW	2003	2003
48	1	LLW	2001	2005
48	1	LLW	1995	1998
48	1	LLW	1992	1992
48	1	LLW	1995	2005
48	1	LLW	1993	1993
48	1	LLW	1992	2002

Response to the NMED information request concerning a list of all LANL locations where hazardous waste, mixed waste, and non-hazardous TRU or low level radioactive waste is generated. This list includes sites recorded in WCATS generating waste as of 01-OCT-1979 through the date the query was run (26-JUN-2014.) The information is broken down into columns as follows:
TA = Technical Area
BLDG = Building within the Technical Area
Waste Type = Haz (ardous), MLLW (Mixed Low Level Waste), TRU (Transuranic) and MTRU (Mixed Transuranic.)
First Fiscal Year Generated = Earliest Fiscal Year Generated
Last Fiscal Year Generated = Latest Fiscal Year Generated

TA	BLDG	Waste Type	First Fiscal Year Generated	Last Fiscal Year Generated
48	1	LLW	1995	2002
48	1	LLW	2006	2006
48	1	LLW	2005	2009
48	1	LLW	1995	2002
48	1	LLW	1995	2003
48	1	LLW	1995	2002
48	1	LLW	1995	1995
48	1	LLW	1999	2003
48	1	LLW	1991	2010
48	1	LLW	1995	2000
48	1	LLW	1995	2003
48	1	LLW	1993	2002
48	1	LLW	1994	1994
48	1	LLW	2001	2002
48	1	LLW	1995	2000
48	1	LLW	2000	2005
48	1	LLW	1996	2004
48	1	LLW	2003	2003
48	1	LLW	1992	2009
48	1	LLW	1999	2003
48	1	LLW	1997	2001
48	1	LLW	1995	2014
48	1	LLW	2005	2005
48	1	LLW	2011	2013
48	1	LLW	1992	2001
48	1	LLW	2000	2002
48	1	LLW	1991	1995
48	1	LLW	1992	1992
48	1	LLW	1999	2013
48	1	LLW	1999	2004
48	1	LLW	1991	2001
48	1	LLW	1993	1994

Response to the NMED information request concerning a list of all LANL locations where hazardous waste, mixed waste, and non-hazardous TRU or low level radioactive waste is generated. This list includes sites recorded in WCATS generating waste as of 01-OCT-1979 through the date the query was run (26-JUN-2014.) The information is broken down into columns as follows:
TA = Technical Area
BLDG = Building within the Technical Area
Waste Type = Haz (ardous), MLLW (Mixed Low Level Waste), TRU (Transuranic) and MTRU (Mixed Transuranic.)
First Fiscal Year Generated = Earliest Fiscal Year Generated
Last Fiscal Year Generated = Latest Fiscal Year Generated

TA	BLDG	Waste Type	First Fiscal Year Generated	Last Fiscal Year Generated
48	1	LLW	2006	2006
48	1	LLW	2014	2014
48	1	LLW	1990	1990
48	1	LLW	2001	2001
48	1	LLW	2012	2012
48	1	LLW	1995	2012
48	1	LLW	1997	2005
48	1423	LLW	1995	1995
48	2	LLW	2003	2008
48	2	LLW	2002	2002
48	200	LLW	2008	2008
48	28	LLW	2002	2009
48	281	LLW	1999	2010
48	281	LLW	2010	2010
48	281	LLW	2008	2010
48	281	LLW	1999	2002
48	38	LLW	1992	1992
48	38	LLW	2004	2004
48	38	LLW	1992	1992
48	45	LLW	2000	2000
48	45	LLW	1995	2002
48	45	LLW	2000	2000
48	45	LLW	1992	1994
48	8	LLW	1983	1983
48	GEN-AREAS	LLW	1996	1998
48	GEN-AREAS	LLW	2002	2010
48	GEN-AREAS	LLW	1980	2010
48	GEN-AREAS	LLW	1990	1990
48	RC-1	LLW	1995	1995
48	RC1	LLW	1992	1992
48	RC1	LLW	1996	2003
48	RSTA-04029	LLW	2009	2009

Response to the NMED information request concerning a list of all LANL locations where hazardous waste, mixed waste, and non-hazardous TRU or low level radioactive waste is generated. This list includes sites recorded in WCATS generating waste as of 01-OCT-1979 through the date the query was run (26-JUN-2014.) The information is broken down into columns as follows:
TA = Technical Area
BLDG = Building within the Technical Area
Waste Type = Haz (ardous), MLLW (Mixed Low Level Waste), TRU (Transuranic) and MTRU (Mixed Transuranic.)
First Fiscal Year Generated = Earliest Fiscal Year Generated
Last Fiscal Year Generated = Latest Fiscal Year Generated

TA	BLDG	Waste Type	First Fiscal Year Generated	Last Fiscal Year Generated
49	1	LLW	2008	2008
49	12	LLW	1997	2000
49	2	LLW	1996	1996
49	GEN-AREAS	LLW	1998	2000
49	GEN-AREAS	LLW	2000	2000
49	GEN-AREAS	LLW	2011	2011
49	GEN-AREAS	LLW	1987	2010
49	GEN-AREAS	LLW	2011	2011
50	1	LLW	1980	2014
50	1	LLW	1996	2014
50	1	LLW	1993	1995
50	1	LLW	1993	1993
50	1	LLW	1992	1996
50	1	LLW	1992	1993
50	1	LLW	1992	1992
50	1	LLW	1992	1993
50	1	LLW	1997	1998
50	1	LLW	1991	2002
50	1	LLW	1991	1995
50	1	LLW	1991	2002
50	1	LLW	1993	2002
50	1	LLW	1994	1994
50	1	LLW	2004	2004
50	1	LLW	2001	2002
50	1	LLW	1982	2003
50	1	LLW	1992	2011
50	1	LLW	1994	1994
50	1	LLW	1993	2001
50	1	LLW	1995	1996
50	1	LLW	1994	1996
50	1	LLW	1993	1999
50	1	LLW	2000	2000

Response to the NMED information request concerning a list of all LANL locations where hazardous waste, mixed waste, and non-hazardous TRU or low level radioactive waste is generated. This list includes sites recorded in WCATS generating waste as of 01-OCT-1979 through the date the query was run (26-JUN-2014.) The information is broken down into columns as follows:
TA = Technical Area
BLDG = Building within the Technical Area
Waste Type = Haz (ardous), MLLW (Mixed Low Level Waste), TRU (Transuranic) and MTRU (Mixed Transuranic.)
First Fiscal Year Generated = Earliest Fiscal Year Generated
Last Fiscal Year Generated = Latest Fiscal Year Generated

TA	BLDG	Waste Type	First Fiscal Year Generated	Last Fiscal Year Generated
50	1	LLW	1997	1997
50	1	LLW	1994	1996
50	1	LLW	1991	2006
50	1	LLW	1993	1993
50	1	LLW	1994	1994
50	1	LLW	2000	2005
50	1	LLW	1997	2012
50	1	LLW	1992	1993
50	1	LLW	1995	1995
50	1	LLW	2000	2006
50	1	LLW	1994	1994
50	1	LLW	1996	1996
50	1	LLW	2000	2000
50	1	LLW	2006	2006
50	1	LLW	1997	1997
50	1	LLW	2004	2014
50	1	LLW	2008	2008
50	1	LLW	1998	1998
50	1	LLW	2001	2002
50	1	LLW	1997	2006
50	1	LLW	2004	2008
50	1	LLW	2011	2011
50	1	LLW	1998	2014
50	1	LLW	1993	1993
50	1	LLW	2004	2004
50	1	LLW	1992	2014
50	1	LLW	2012	2013
50	1000	LLW	1995	1995
50	1009	LLW	2004	2012
50	1009	LLW	2009	2009
50	1009	LLW	2002	2006
50	101930	LLW	1997	1997

Response to the NMED information request concerning a list of all LANL locations where hazardous waste, mixed waste, and non-hazardous TRU or low level radioactive waste is generated. This list includes sites recorded in WCATS generating waste as of 01-OCT-1979 through the date the query was run (26-JUN-2014.) The information is broken down into columns as follows:
TA = Technical Area
BLDG = Building within the Technical Area
Waste Type = Haz (ardous), MLLW (Mixed Low Level Waste), TRU (Transuranic) and MTRU (Mixed Transuranic.)
First Fiscal Year Generated = Earliest Fiscal Year Generated
Last Fiscal Year Generated = Latest Fiscal Year Generated

TA	BLDG	Waste Type	First Fiscal Year Generated	Last Fiscal Year Generated
50	114	LLW	1997	1998
50	114	LLW	1997	1998
50	152	LLW	1997	1997
50	177	LLW	1983	1983
50	185	LLW	1994	1996
50	185	LLW	1995	1995
50	190	LLW	1998	1998
50	190	LLW	1998	1998
50	2	LLW	1982	1987
50	2	LLW	1996	1997
50	2	LLW	1997	1997
50	2	LLW	1993	1993
50	2	LLW	2001	2002
50	201	LLW	2007	2007
50	215	LLW	1991	1994
50	224	LLW	2012	2012
50	229	LLW	2013	2013
50	231	LLW	2011	2012
50	250	LLW	2011	2011
50	257	LLW	1993	1994
50	257	LLW	2007	2007
50	281	LLW	1998	2009
50	281	LLW	2001	2001
50	281	LLW	1999	2010
50	281	LLW	1999	2010
50	29	LLW	2001	2001
50	37	LLW	1980	1997
50	37	LLW	1993	1996
50	37	LLW	2002	2002
50	37	LLW	1995	2004
50	37	LLW	1994	1995
50	37	LLW	1993	1993

Response to the NMED information request concerning a list of all LANL locations where hazardous waste, mixed waste, and non-hazardous TRU or low level radioactive waste is generated. This list includes sites recorded in WCATS generating waste as of 01-OCT-1979 through the date the query was run (26-JUN-2014.) The information is broken down into columns as follows:
TA = Technical Area
BLDG = Building within the Technical Area
Waste Type = Haz (ardous), MLLW (Mixed Low Level Waste), TRU (Transuranic) and MTRU (Mixed Transuranic.)
First Fiscal Year Generated = Earliest Fiscal Year Generated
Last Fiscal Year Generated = Latest Fiscal Year Generated

TA	BLDG	Waste Type	First Fiscal Year Generated	Last Fiscal Year Generated
50	37	LLW	1992	1994
50	37	LLW	2000	2000
50	37	LLW	2014	2014
50	4	LLW	2005	2011
50	4	LLW	2011	2011
50	412	LLW	2014	2014
50	49	LLW	1988	1997
50	49	LLW	1988	1997
50	51	LLW	1994	1994
50	54	LLW	1986	1986
50	69	LLW	1998	2004
50	69	LLW	1982	2014
50	69	LLW	2014	2014
50	69	LLW	2007	2014
50	69	LLW	2009	2009
50	69	LLW	1998	2014
50	69	LLW	1995	2014
50	69	LLW	1992	1995
50	69	LLW	2007	2012
50	69	LLW	2009	2011
50	69	LLW	2007	2008
50	69	LLW	2011	2011
50	69	LLW	1993	1993
50	69	LLW	2012	2014
50	83	LLW	2003	2003
50	83	LLW	2002	2002
50	84	LLW	1984	1985
50	84	LLW	2009	2010
50	GEN-AREAS	LLW	2011	2011
50	GEN-AREAS	LLW	1997	1998
50	GEN-AREAS	LLW	1980	2012
50	GEN-AREAS	LLW	2000	2002

Response to the NMED information request concerning a list of all LANL locations where hazardous waste, mixed waste, and non-hazardous TRU or low level radioactive waste is generated. This list includes sites recorded in WCATS generating waste as of 01-OCT-1979 through the date the query was run (26-JUN-2014.) The information is broken down into columns as follows:
TA = Technical Area
BLDG = Building within the Technical Area
Waste Type = Haz (ardous), MLLW (Mixed Low Level Waste), TRU (Transuranic) and MTRU (Mixed Transuranic.)
First Fiscal Year Generated = Earliest Fiscal Year Generated
Last Fiscal Year Generated = Latest Fiscal Year Generated

TA	BLDG	Waste Type	First Fiscal Year Generated	Last Fiscal Year Generated
50	GEN-AREAS	LLW	2002	2008
50	GEN-AREAS	LLW	2004	2004
51	1	LLW	2001	2001
51	1	LLW	2000	2000
51	11	LLW	1994	1995
51	11	LLW	2001	2001
51	12	LLW	1987	1987
51	12	LLW	1995	1996
51	12	LLW	1995	1995
51	21	LLW	1991	2001
51	21	LLW	1993	2001
51	21	LLW	2001	2001
51	23	LLW	1986	1989
51	23	LLW	2003	2003
51	27	LLW	1992	1992
51	73	LLW	1998	1998
51	GEN-AREAS	LLW	1980	2001
51	GEN-AREAS	LLW	2001	2001
52	1	LLW	1980	1991
52	26	LLW	1996	1996
52	45	LLW	1986	1986
52	GEN-AREAS	LLW	1980	1990
52	GEN-AREAS	LLW	2008	2009
52	GEN-AREAS	LLW	1999	1999
53	1	LLW	1980	1993
53	1	LLW	1999	1999
53	1	LLW	1995	1997
53	1	LLW	1992	1992
53	1	LLW	1993	1994
53	1	LLW	1993	1993
53	1	LLW	1997	1997
53	1	LLW	1993	1993

Response to the NMED information request concerning a list of all LANL locations where hazardous waste, mixed waste, and non-hazardous TRU or low level radioactive waste is generated. This list includes sites recorded in WCATS generating waste as of 01-OCT-1979 through the date the query was run (26-JUN-2014.) The information is broken down into columns as follows:
TA = Technical Area
BLDG = Building within the Technical Area
Waste Type = Haz (ardous), MLLW (Mixed Low Level Waste), TRU (Transuranic) and MTRU (Mixed Transuranic.)
First Fiscal Year Generated = Earliest Fiscal Year Generated
Last Fiscal Year Generated = Latest Fiscal Year Generated

TA	BLDG	Waste Type	First Fiscal Year Generated	Last Fiscal Year Generated
53	1	LLW	1994	1994
53	1	LLW	1994	1994
53	1	LLW	1994	1995
53	1	LLW	1992	1994
53	1	LLW	1995	1995
53	1	LLW	1992	1994
53	1	LLW	1997	1997
53	1	LLW	2008	2009
53	14	LLW	1984	1987
53	15	LLW	1986	1991
53	155	LLW	1994	1994
53	16	LLW	1988	1988
53	17	LLW	1997	1997
53	17	LLW	1986	1997
53	17	LLW	1991	1992
53	18	LLW	1982	1992
53	19	LLW	1984	1990
53	2	LLW	1984	1998
53	2	LLW	1992	1993
53	2	LLW	1993	1993
53	22	LLW	1985	1996
53	243	LLW	1992	1992
53	25	LLW	1996	1996
53	25	LLW	2008	2009
53	25	LLW	1992	1993
53	26	LLW	1982	1992
53	26	LLW	1992	1996
53	27	LLW	1984	1990
53	28	LLW	1987	1987
53	29	LLW	1986	1986
53	29	LLW	2003	2003
53	3	LLW	1994	1997

Response to the NMED information request concerning a list of all LANL locations where hazardous waste, mixed waste, and non-hazardous TRU or low level radioactive waste is generated. This list includes sites recorded in WCATS generating waste as of 01-OCT-1979 through the date the query was run (26-JUN-2014.) The information is broken down into columns as follows:
TA = Technical Area
BLDG = Building within the Technical Area
Waste Type = Haz (ardous), MLLW (Mixed Low Level Waste), TRU (Transuranic) and MTRU (Mixed Transuranic.)
First Fiscal Year Generated = Earliest Fiscal Year Generated
Last Fiscal Year Generated = Latest Fiscal Year Generated

TA	BLDG	Waste Type	First Fiscal Year Generated	Last Fiscal Year Generated
53	3	LLW	1980	2011
53	3	LLW	2006	2006
53	3	LLW	1997	1997
53	3	LLW	2004	2004
53	3	LLW	1995	1996
53	3	LLW	1992	1992
53	3	LLW	1995	2000
53	3	LLW	1997	1999
53	3	LLW	2001	2003
53	3	LLW	1992	2000
53	3	LLW	1996	1996
53	3	LLW	1994	2010
53	3	LLW	2001	2001
53	3	LLW	1992	1992
53	3	LLW	1993	2009
53	3	LLW	1995	1996
53	3	LLW	1995	1995
53	3	LLW	2009	2009
53	3	LLW	1995	1995
53	3	LLW	1994	1995
53	3	LLW	1993	1994
53	3	LLW	1993	1993
53	3	LLW	1999	1999
53	3	LLW	2009	2011
53	3	LLW	1995	1995
53	3	LLW	2000	2000
53	3	LLW	1994	1994
53	30	LLW	1990	1994
53	30	LLW	2008	2008
53	30	LLW	2003	2003
53	30	LLW	2000	2000
53	30	LLW	2008	2010

Response to the NMED information request concerning a list of all LANL locations where hazardous waste, mixed waste, and non-hazardous TRU or low level radioactive waste is generated. This list includes sites recorded in WCATS generating waste as of 01-OCT-1979 through the date the query was run (26-JUN-2014.) The information is broken down into columns as follows:
TA = Technical Area
BLDG = Building within the Technical Area
Waste Type = Haz (ardous), MLLW (Mixed Low Level Waste), TRU (Transuranic) and MTRU (Mixed Transuranic.)
First Fiscal Year Generated = Earliest Fiscal Year Generated
Last Fiscal Year Generated = Latest Fiscal Year Generated

TA	BLDG	Waste Type	First Fiscal Year Generated	Last Fiscal Year Generated
53	31	LLW	1994	1994
53	32	LLW	2000	2000
53	32	LLW	1999	2000
53	34	LLW	1988	1988
53	364	LLW	1991	2003
53	364	LLW	2004	2004
53	381	LLW	1998	1998
53	381	LLW	1999	1999
53	39	LLW	1993	1993
53	394	LLW	1997	1997
53	394	LLW	2004	2005
53	3M	LLW	1993	1994
53	4	LLW	1981	1997
53	4	LLW	1992	1992
53	4	LLW	1997	1997
53	43	LLW	1993	1993
53	43	LLW	1992	1995
53	43	LLW	1992	1992
53	473	LLW	1992	1992
53	53	LLW	1993	1993
53	54	LLW	1989	1989
53	541	LLW	1998	1998
53	541	LLW	1999	1999
53	541	LLW	1996	1996
53	570	LLW	1992	1992
53	570	LLW	1992	1992
53	6	LLW	1982	1990
53	6	LLW	1993	1994
53	622	LLW	1991	1992
53	622	LLW	1994	1994
53	622	LLW	1994	1994
53	7	LLW	1981	1997

Response to the NMED information request concerning a list of all LANL locations where hazardous waste, mixed waste, and non-hazardous TRU or low level radioactive waste is generated. This list includes sites recorded in WCATS generating waste as of 01-OCT-1979 through the date the query was run (26-JUN-2014.) The information is broken down into columns as follows:
TA = Technical Area
BLDG = Building within the Technical Area
Waste Type = Haz (ardous), MLLW (Mixed Low Level Waste), TRU (Transuranic) and MTRU (Mixed Transuranic.)
First Fiscal Year Generated = Earliest Fiscal Year Generated
Last Fiscal Year Generated = Latest Fiscal Year Generated

TA	BLDG	Waste Type	First Fiscal Year Generated	Last Fiscal Year Generated
53	7	LLW	1996	1996
53	7	LLW	2001	2001
53	7	LLW	2007	2013
53	7	LLW	1993	1996
53	7	LLW	2004	2008
53	7	LLW	2000	2001
53	7	LLW	1996	1997
53	8	LLW	1989	1991
53	8	LLW	1995	1999
53	8	LLW	1998	2008
53	8	LLW	2007	2007
53	823	LLW	1983	1983
53	83	LLW	1992	1992
53	882	LLW	1988	1999
53	882	LLW	1998	1998
53	882	LLW	2001	2001
53	882	LLW	1999	2000
53	883	LLW	1990	1992
53	984	LLW	2007	2008
53	984	LLW	2008	2008
53	GEN-AREAS	LLW	2011	2011
53	GEN-AREAS	LLW	1980	2011
53	GEN-AREAS	LLW	1995	1995
53	GEN-AREAS	LLW	1999	2010
53	GEN-AREAS	LLW	2012	2012
53	MPF3	LLW	1995	1997
53	RSTA-03728	LLW	2009	2013
53	RSTA-03728	LLW	2013	2013
54	1001	LLW	1994	2010
54	1001	LLW	1999	2005
54	1001	LLW	2001	2003
54	1009	LLW	1995	1997

Response to the NMED information request concerning a list of all LANL locations where hazardous waste, mixed waste, and non-hazardous TRU or low level radioactive waste is generated. This list includes sites recorded in WCATS generating waste as of 01-OCT-1979 through the date the query was run (26-JUN-2014.) The information is broken down into columns as follows:
TA = Technical Area
BLDG = Building within the Technical Area
Waste Type = Haz (ardous), MLLW (Mixed Low Level Waste), TRU (Transuranic) and MTRU (Mixed Transuranic.)
First Fiscal Year Generated = Earliest Fiscal Year Generated
Last Fiscal Year Generated = Latest Fiscal Year Generated

TA	BLDG	Waste Type	First Fiscal Year Generated	Last Fiscal Year Generated
54	1009	LLW	1994	1996
54	1009	LLW	2001	2012
54	1009	LLW	1996	2009
54	1009	LLW	2000	2012
54	1009	LLW	2009	2009
54	1009	LLW	1995	1996
54	1009	LLW	2000	2000
54	11	LLW	2005	2005
54	11	LLW	2002	2002
54	11	LLW	2002	2005
54	11	LLW	2002	2002
54	132	LLW	1991	1991
54	134	LLW	1991	1991
54	15	LLW	2000	2000
54	15	LLW	2000	2000
54	153	LLW	1998	2013
54	153	LLW	2002	2012
54	153	LLW	2003	2003
54	153	LLW	1998	2003
54	153	LLW	2002	2002
54	156	LLW	2013	2013
54	2	LLW	1999	2013
54	2	LLW	2010	2010
54	2	LLW	1993	1995
54	2	LLW	1999	1999
54	2	LLW	1996	1996
54	2	LLW	1999	2011
54	2	LLW	1999	2010
54	2	LLW	2002	2014
54	2	LLW	2013	2013
54	20	LLW	2014	2014
54	20	LLW	2005	2006

Response to the NMED information request concerning a list of all LANL locations where hazardous waste, mixed waste, and non-hazardous TRU or low level radioactive waste is generated. This list includes sites recorded in WCATS generating waste as of 01-OCT-1979 through the date the query was run (26-JUN-2014.) The information is broken down into columns as follows:
TA = Technical Area
BLDG = Building within the Technical Area
Waste Type = Haz (ardous), MLLW (Mixed Low Level Waste), TRU (Transuranic) and MTRU (Mixed Transuranic.)
First Fiscal Year Generated = Earliest Fiscal Year Generated
Last Fiscal Year Generated = Latest Fiscal Year Generated

TA	BLDG	Waste Type	First Fiscal Year Generated	Last Fiscal Year Generated
54	215	LLW	1998	2004
54	215	LLW	2004	2004
54	215	LLW	2007	2007
54	215	LLW	2006	2006
54	215	LLW	1998	2005
54	215	LLW	2005	2005
54	215	LLW	1991	2007
54	216	LLW	2000	2009
54	216	LLW	2009	2009
54	22	LLW	1986	1989
54	22	LLW	1992	1995
54	224	LLW	2001	2001
54	224	LLW	2003	2005
54	224	LLW	2008	2008
54	224	LLW	2002	2011
54	224	LLW	1999	2009
54	224	LLW	2005	2010
54	224	LLW	2009	2009
54	224	LLW	2009	2009
54	224	LLW	2001	2011
54	224	LLW	2014	2014
54	224	LLW	2007	2007
54	226	LLW	1998	1998
54	226	LLW	2000	2000
54	226	LLW	2000	2005
54	226	LLW	2010	2010
54	226	LLW	1998	1998
54	226	LLW	2002	2002
54	229	LLW	2012	2013
54	229	LLW	2013	2013
54	229	LLW	2002	2014
54	229	LLW	2014	2014

Response to the NMED information request concerning a list of all LANL locations where hazardous waste, mixed waste, and non-hazardous TRU or low level radioactive waste is generated. This list includes sites recorded in WCATS generating waste as of 01-OCT-1979 through the date the query was run (26-JUN-2014.) The information is broken down into columns as follows:
TA = Technical Area
BLDG = Building within the Technical Area
Waste Type = Haz (ardous), MLLW (Mixed Low Level Waste), TRU (Transuranic) and MTRU (Mixed Transuranic.)
First Fiscal Year Generated = Earliest Fiscal Year Generated
Last Fiscal Year Generated = Latest Fiscal Year Generated

TA	BLDG	Waste Type	First Fiscal Year Generated	Last Fiscal Year Generated
54	230	LLW	2012	2013
54	230	LLW	2001	2012
54	231	LLW	2014	2014
54	231	LLW	1998	2014
54	231	LLW	2014	2014
54	231	LLW	2012	2012
54	231	LLW	2011	2012
54	231	LLW	2000	2014
54	231	LLW	2014	2014
54	231	LLW	2001	2001
54	231	LLW	2000	2011
54	231	LLW	2013	2014
54	231	LLW	1998	2012
54	231	LLW	2001	2001
54	231	LLW	2007	2014
54	232	LLW	2008	2008
54	232	LLW	2011	2011
54	232	LLW	2014	2014
54	232	LLW	2009	2012
54	232	LLW	2005	2013
54	232	LLW	2007	2011
54	239	LLW	1998	1998
54	240	LLW	1995	1995
54	240	LLW	1995	1995
54	242	LLW	2001	2001
54	242	LLW	2002	2002
54	247	LLW	1997	1997
54	281	LLW	1999	2008
54	281	LLW	2002	2002
54	281	LLW	2002	2002
54	281	LLW	2009	2009
54	281	LLW	2000	2000

Response to the NMED information request concerning a list of all LANL locations where hazardous waste, mixed waste, and non-hazardous TRU or low level radioactive waste is generated. This list includes sites recorded in WCATS generating waste as of 01-OCT-1979 through the date the query was run (26-JUN-2014.) The information is broken down into columns as follows:
TA = Technical Area
BLDG = Building within the Technical Area
Waste Type = Haz (ardous), MLLW (Mixed Low Level Waste), TRU (Transuranic) and MTRU (Mixed Transuranic.)
First Fiscal Year Generated = Earliest Fiscal Year Generated
Last Fiscal Year Generated = Latest Fiscal Year Generated

TA	BLDG	Waste Type	First Fiscal Year Generated	Last Fiscal Year Generated
54	281	LLW	1998	2004
54	281	LLW	2009	2009
54	281	LLW	2009	2010
54	281	LLW	1998	2013
54	281	LLW	2001	2005
54	281	LLW	2001	2011
54	281	LLW	2001	2001
54	281	LLW	2007	2012
54	281	LLW	1998	2009
54	281	LLW	2013	2013
54	281-LLWS	LLW	2014	2014
54	281-PAD	LLW	2014	2014
54	281-PAD	LLW	2014	2014
54	281-PAD	LLW	2014	2014
54	281-S	LLW	2014	2014
54	283	LLW	1996	1999
54	283	LLW	2001	2012
54	283	LLW	1996	1998
54	315	LLW	2000	2002
54	315	LLW	2010	2010
54	315	LLW	2007	2009
54	315	LLW	2011	2011
54	315	LLW	2011	2011
54	315	LLW	2011	2011
54	315	LLW	2008	2013
54	315	LLW	1999	2013
54	315	LLW	2005	2006
54	315	LLW	2007	2011
54	32	LLW	2014	2014
54	324	LLW	1999	2002
54	325	LLW	1999	1999
54	325	LLW	1999	1999

Response to the NMED information request concerning a list of all LANL locations where hazardous waste, mixed waste, and non-hazardous TRU or low level radioactive waste is generated. This list includes sites recorded in WCATS generating waste as of 01-OCT-1979 through the date the query was run (26-JUN-2014.) The information is broken down into columns as follows:
TA = Technical Area
BLDG = Building within the Technical Area
Waste Type = Haz (ardous), MLLW (Mixed Low Level Waste), TRU (Transuranic) and MTRU (Mixed Transuranic.)
First Fiscal Year Generated = Earliest Fiscal Year Generated
Last Fiscal Year Generated = Latest Fiscal Year Generated

TA	BLDG	Waste Type	First Fiscal Year Generated	Last Fiscal Year Generated
54	325	LLW	1999	1999
54	33	LLW	2009	2009
54	33	LLW	1999	2010
54	33	LLW	1996	1996
54	33	LLW	2002	2002
54	33	LLW	1999	2012
54	33	LLW	1996	2009
54	33	LLW	2002	2002
54	35	LLW	2001	2001
54	35	LLW	2008	2008
54	36	LLW	2002	2002
54	36	LLW	2001	2002
54	36	LLW	2001	2001
54	36	LLW	2001	2002
54	37	LLW	1986	1993
54	37	LLW	1994	1994
54	37	LLW	1993	1994
54	37	LLW	1992	1992
54	375	LLW	2013	2013
54	375	LLW	2012	2014
54	375	LLW	1999	2014
54	375	LLW	2013	2013
54	375	LLW	2012	2012
54	375	LLW	2014	2014
54	38	LLW	2011	2011
54	38	LLW	2009	2010
54	38	LLW	2012	2012
54	4	LLW	2001	2001
54	4	LLW	2000	2000
54	4	LLW	2000	2002
54	4	LLW	2001	2001
54	4	LLW	2001	2002

Response to the NMED information request concerning a list of all LANL locations where hazardous waste, mixed waste, and non-hazardous TRU or low level radioactive waste is generated. This list includes sites recorded in WCATS generating waste as of 01-OCT-1979 through the date the query was run (26-JUN-2014.) The information is broken down into columns as follows:
TA = Technical Area
BLDG = Building within the Technical Area
Waste Type = Haz (ardous), MLLW (Mixed Low Level Waste), TRU (Transuranic) and MTRU (Mixed Transuranic.)
First Fiscal Year Generated = Earliest Fiscal Year Generated
Last Fiscal Year Generated = Latest Fiscal Year Generated

TA	BLDG	Waste Type	First Fiscal Year Generated	Last Fiscal Year Generated
54	412	LLW	2003	2003
54	412	LLW	2009	2014
54	412	LLW	2002	2013
54	412	LLW	2013	2014
54	412	LLW	2003	2003
54	412	LLW	2003	2009
54	412	LLW	1983	2014
54	428	LLW	2003	2003
54	48	LLW	2003	2012
54	48-P10	LLW	2008	2009
54	48-P10	LLW	2007	2007
54	48-P10	LLW	2006	2007
54	486	LLW	2012	2013
54	49	LLW	2003	2003
54	49	LLW	1993	1993
54	49	LLW	1993	2004
54	49	LLW	2010	2010
54	49	LLW	2007	2007
54	49	LLW	1999	2012
54	49	LLW	2000	2000
54	49	LLW	1993	2010
54	49	LLW	1997	1997
54	506	LLW	2012	2013
54	54	LLW	1997	1997
54	55	LLW	1993	1993
54	58	LLW	1999	1999
54	58	LLW	1999	1999
54	64	LLW	2007	2007
54	64	LLW	1993	2008
54	64	LLW	1999	1999
54	64	LLW	1997	1997
54	7	LLW	2003	2003

Response to the NMED information request concerning a list of all LANL locations where hazardous waste, mixed waste, and non-hazardous TRU or low level radioactive waste is generated. This list includes sites recorded in WCATS generating waste as of 01-OCT-1979 through the date the query was run (26-JUN-2014.) The information is broken down into columns as follows:
TA = Technical Area
BLDG = Building within the Technical Area
Waste Type = Haz (ardous), MLLW (Mixed Low Level Waste), TRU (Transuranic) and MTRU (Mixed Transuranic.)
First Fiscal Year Generated = Earliest Fiscal Year Generated
Last Fiscal Year Generated = Latest Fiscal Year Generated

TA	BLDG	Waste Type	First Fiscal Year Generated	Last Fiscal Year Generated
54	79	LLW	1993	1993
54	8	LLW	1996	2014
54	8	LLW	2008	2012
54	8	LLW	2012	2012
54	8	LLW	2006	2008
54	8	LLW	2000	2002
54	8	LLW	2006	2010
54	8	LLW	1996	2009
54	8	LLW	2000	2000
54	8	LLW	2014	2014
54	BONEYARD	LLW	2004	2004
54	BONEYARD	LLW	2013	2013
54	BONEYARD	LLW	2013	2014
54	GEN-AREAS	LLW	1998	2013
54	GEN-AREAS	LLW	1999	2002
54	GEN-AREAS	LLW	1999	2012
54	GEN-AREAS	LLW	1994	2009
54	GEN-AREAS	LLW	2007	2007
54	GEN-AREAS	LLW	2007	2007
54	GEN-AREAS	LLW	2009	2009
54	GEN-AREAS	LLW	1997	2009
54	GEN-AREAS	LLW	1980	2014
54	GEN-AREAS	LLW	1994	1994
54	GEN-AREAS	LLW	1993	1993
54	GEN-AREAS	LLW	1993	1994
54	GEN-AREAS	LLW	2010	2010
54	GEN-AREAS	LLW	1996	2000
54	GEN-AREAS	LLW	2001	2013
54	GEN-AREAS	LLW	2011	2011
54	GEN-AREAS	LLW	2000	2002
54	GEN-AREAS	LLW	2011	2011
54	GEN-AREAS	LLW	2011	2011

Response to the NMED information request concerning a list of all LANL locations where hazardous waste, mixed waste, and non-hazardous TRU or low level radioactive waste is generated. This list includes sites recorded in WCATS generating waste as of 01-OCT-1979 through the date the query was run (26-JUN-2014.) The information is broken down into columns as follows:
TA = Technical Area
BLDG = Building within the Technical Area
Waste Type = Haz (ardous), MLLW (Mixed Low Level Waste), TRU (Transuranic) and MTRU (Mixed Transuranic.)
First Fiscal Year Generated = Earliest Fiscal Year Generated
Last Fiscal Year Generated = Latest Fiscal Year Generated

TA	BLDG	Waste Type	First Fiscal Year Generated	Last Fiscal Year Generated
54	GEN-AREAS	LLW	2011	2011
54	GEN-AREAS	LLW	2011	2011
54	GEN-AREAS	LLW	2011	2011
54	GEN-AREAS	LLW	2011	2011
54	GEN-AREAS	LLW	2010	2011
54	GEN-AREAS	LLW	2011	2011
54	GEN-AREAS	LLW	2011	2011
54	GEN-AREAS	LLW	2011	2011
54	L	LLW	1994	1994
54	NA	LLW	1994	1994
54	OUT-S	LLW	1995	1996
54	PAD02	LLW	2002	2002
54	PAD04	LLW	2001	2002
54	PAD04	LLW	2002	2002
54	PAD04	LLW	2001	2002
54	PAD10	LLW	2006	2014
54	YARD	LLW	1995	2007
54-G	11	LLW	1980	1984
54-G	2	LLW	1981	2013
54-G	224	LLW	1996	2011
54-G	231	LLW	2012	2014
54-G	232	LLW	2014	2014
54-G	281	LLW	2008	2010
54-G	33	LLW	1988	1988
54-G	375	LLW	2010	2010
54-G	48-P10	LLW	2008	2008
54-G	GEN-AREAS	LLW	1980	1992
54-G	GEN-AREAS	LLW	2011	2011
54-G	GEN-AREAS	LLW	2011	2011
54-G	GEN-AREAS	LLW	2011	2011
54-G	PAD01	LLW	1988	1988
54-G	PAD07	LLW	2010	2010

Response to the NMED information request concerning a list of all LANL locations where hazardous waste, mixed waste, and non-hazardous TRU or low level radioactive waste is generated. This list includes sites recorded in WCATS generating waste as of 01-OCT-1979 through the date the query was run (26-JUN-2014.) The information is broken down into columns as follows:
TA = Technical Area
BLDG = Building within the Technical Area
Waste Type = Haz (ardous), MLLW (Mixed Low Level Waste), TRU (Transuranic) and MTRU (Mixed Transuranic.)
First Fiscal Year Generated = Earliest Fiscal Year Generated
Last Fiscal Year Generated = Latest Fiscal Year Generated

TA	BLDG	Waste Type	First Fiscal Year Generated	Last Fiscal Year Generated
54-G-DISP	GEN-AREAS	LLW	1984	2006
54-L	215	LLW	1998	2002
54-L	36	LLW	1991	1991
54-L	39	LLW	1989	1992
54-L	GEN-AREAS	LLW	1985	2003
54-L	YARD	LLW	2010	2010
54-L	YARD	LLW	1991	1992
55	1	LLW	1983	1983
55	1	LLW	1999	1999
55	1	LLW	2008	2008
55	1	LLW	2010	2010
55	2	LLW	1980	1988
55	2	LLW	1995	1996
55	2	LLW	1992	2002
55	2	LLW	1997	1997
55	2	LLW	1997	1997
55	2	LLW	1993	1995
55	2	LLW	1996	1996
55	20	LLW	2001	2001
55	231	LLW	2009	2009
55	264	LLW	2000	2000
55	264	LLW	2004	2004
55	28	LLW	1992	1992
55	281	LLW	2005	2005
55	281	LLW	2002	2002
55	281	LLW	2003	2003
55	3	LLW	1982	1991
55	4	LLW	2011	2011
55	4	LLW	2011	2011
55	4	LLW	2003	2003
55	4	LLW	2003	2003
55	4	LLW	2005	2005

Response to the NMED information request concerning a list of all LANL locations where hazardous waste, mixed waste, and non-hazardous TRU or low level radioactive waste is generated. This list includes sites recorded in WCATS generating waste as of 01-OCT-1979 through the date the query was run (26-JUN-2014.) The information is broken down into columns as follows:
TA = Technical Area
BLDG = Building within the Technical Area
Waste Type = Haz (ardous), MLLW (Mixed Low Level Waste), TRU (Transuranic) and MTRU (Mixed Transuranic.)
First Fiscal Year Generated = Earliest Fiscal Year Generated
Last Fiscal Year Generated = Latest Fiscal Year Generated

TA	BLDG	Waste Type	First Fiscal Year Generated	Last Fiscal Year Generated
55	4	LLW	1994	1994
55	4	LLW	2003	2003
55	4	LLW	2001	2001
55	4	LLW	1995	1995
55	4	LLW	2003	2003
55	4	LLW	1995	2002
55	4	LLW	1999	1999
55	4	LLW	1999	1999
55	4	LLW	1999	2012
55	4	LLW	2014	2014
55	4	LLW	1999	1999
55	4	LLW	1999	1999
55	4	LLW	1994	2012
55	4	LLW	2012	2014
55	4	LLW	2001	2004
55	4	LLW	2001	2013
55	4	LLW	2003	2011
55	42	LLW	1992	1992
55	5	LLW	1980	2011
55	5	LLW	2001	2001
55	GEN-AREAS	LLW	1980	2010
55	GEN-AREAS	LLW	2011	2011
55	PAD	LLW	2004	2004
55	PAD	LLW	2011	2011
55-PF4	-AREA	LLW	2000	2012
55-PF4	1	LLW	1992	1994
55-PF4	100-AREA	LLW	1992	1992
55-PF4	100-AREA	LLW	2001	2013
55-PF4	2	LLW	1995	1995
55-PF4	200-AREA	LLW	1990	1991
55-PF4	200-AREA	LLW	2000	2013
55-PF4	281	LLW	2005	2005

Response to the NMED information request concerning a list of all LANL locations where hazardous waste, mixed waste, and non-hazardous TRU or low level radioactive waste is generated. This list includes sites recorded in WCATS generating waste as of 01-OCT-1979 through the date the query was run (26-JUN-2014.) The information is broken down into columns as follows:
TA = Technical Area
BLDG = Building within the Technical Area
Waste Type = Haz (ardous), MLLW (Mixed Low Level Waste), TRU (Transuranic) and MTRU (Mixed Transuranic.)
First Fiscal Year Generated = Earliest Fiscal Year Generated
Last Fiscal Year Generated = Latest Fiscal Year Generated

TA	BLDG	Waste Type	First Fiscal Year Generated	Last Fiscal Year Generated
55-PF4	281	LLW	1998	2010
55-PF4	300-AREA	LLW	2003	2013
55-PF4	4	LLW	2011	2011
55-PF4	4	LLW	1999	2004
55-PF4	4	LLW	2002	2008
55-PF4	4	LLW	1994	2002
55-PF4	4	LLW	2004	2004
55-PF4	4	LLW	2000	2001
55-PF4	4	LLW	1997	1997
55-PF4	4	LLW	2001	2011
55-PF4	4	LLW	2000	2000
55-PF4	4	LLW	2000	2000
55-PF4	4	LLW	1994	2002
55-PF4	4	LLW	2001	2002
55-PF4	4	LLW	1995	1995
55-PF4	4	LLW	2006	2011
55-PF4	4	LLW	1994	1994
55-PF4	4	LLW	2002	2002
55-PF4	4	LLW	2006	2006
55-PF4	4	LLW	1994	1994
55-PF4	4	LLW	1996	1996
55-PF4	4	LLW	1995	2002
55-PF4	4	LLW	2000	2011
55-PF4	4	LLW	2004	2004
55-PF4	4	LLW	1999	1999
55-PF4	4	LLW	1999	2011
55-PF4	4	LLW	2011	2011
55-PF4	4	LLW	1999	1999
55-PF4	4	LLW	1992	2012
55-PF4	4	LLW	1998	1999
55-PF4	4	LLW	1999	1999
55-PF4	4	LLW	1992	2011

Response to the NMED information request concerning a list of all LANL locations where hazardous waste, mixed waste, and non-hazardous TRU or low level radioactive waste is generated. This list includes sites recorded in WCATS generating waste as of 01-OCT-1979 through the date the query was run (26-JUN-2014.) The information is broken down into columns as follows:
TA = Technical Area
BLDG = Building within the Technical Area
Waste Type = Haz (ardous), MLLW (Mixed Low Level Waste), TRU (Transuranic) and MTRU (Mixed Transuranic.)
First Fiscal Year Generated = Earliest Fiscal Year Generated
Last Fiscal Year Generated = Latest Fiscal Year Generated

TA	BLDG	Waste Type	First Fiscal Year Generated	Last Fiscal Year Generated
55-PF4	4	LLW	1991	2002
55-PF4	4	LLW	1994	2012
55-PF4	4	LLW	2001	2003
55-PF4	4	LLW	2002	2011
55-PF4	4	LLW	1993	1993
55-PF4	4/2	LLW	1992	1992
55-PF4	400-AREA	LLW	2004	2013
55-PF4	400-AREA	LLW	1989	2000
55-PF4	500-AREA	LLW	2000	2012
55-PF4	500-AREA	LLW	1992	1992
55-PF4	BASEMENT	LLW	2008	2013
55-PF4	BASEMENT	LLW	1985	2009
55-PF4	GEN-AREAS	LLW	2002	2013
55-PF4	GEN-AREAS	LLW	1980	2010
55-PF4	[NS]	LLW	2008	2008
57	17	LLW	1991	1991
57	18	LLW	1991	1991
57	GEN-AREAS	LLW	1986	1993
59	1	LLW	1981	2014
59	1	LLW	1993	1993
59	1	LLW	2002	2002
59	1	LLW	1996	1998
59	1	LLW	1993	1997
59	1	LLW	2007	2007
59	1	LLW	1991	2005
59	1	LLW	1999	1999
59	1	LLW	1993	2012
59	1	LLW	2002	2003
59	1	LLW	1991	2001
59	1	LLW	2000	2000
59	1	LLW	1995	1995
59	1	LLW	1992	1992

Response to the NMED information request concerning a list of all LANL locations where hazardous waste, mixed waste, and non-hazardous TRU or low level radioactive waste is generated. This list includes sites recorded in WCATS generating waste as of 01-OCT-1979 through the date the query was run (26-JUN-2014.) The information is broken down into columns as follows:
TA = Technical Area
BLDG = Building within the Technical Area
Waste Type = Haz (ardous), MLLW (Mixed Low Level Waste), TRU (Transuranic) and MTRU (Mixed Transuranic.)
First Fiscal Year Generated = Earliest Fiscal Year Generated
Last Fiscal Year Generated = Latest Fiscal Year Generated

TA	BLDG	Waste Type	First Fiscal Year Generated	Last Fiscal Year Generated
59	1	LLW	1996	1996
59	1	LLW	1992	1992
59	1	LLW	1993	1993
59	1	LLW	1993	1993
59	1	LLW	2002	2002
59	1	LLW	1993	1994
59	1	LLW	1993	1997
59	1	LLW	2011	2013
59	1	LLW	1993	2002
59	1	LLW	1993	1995
59	1	LLW	1994	2002
59	1	LLW	1998	1999
59	1	LLW	2002	2002
59	1	LLW	2014	2014
59	1	LLW	2000	2001
59	1	LLW	2009	2010
59	1	LLW	2009	2009
59	116	LLW	1991	1991
59	117	LLW	1994	1994
59	19	LLW	1996	1996
59	19	LLW	1993	1993
59	19	LLW	1993	1993
59	19	LLW	1993	1994
59	2	LLW	1995	1995
59	20	LLW	1995	1995
59	20	LLW	1996	1996
59	2237	LLW	1996	1996
59	281	LLW	1999	2007
59	3	LLW	1984	1989
59	3	LLW	1997	1997
59	31	LLW	1991	1991
59	31	LLW	1994	1994

Response to the NMED information request concerning a list of all LANL locations where hazardous waste, mixed waste, and non-hazardous TRU or low level radioactive waste is generated. This list includes sites recorded in WCATS generating waste as of 01-OCT-1979 through the date the query was run (26-JUN-2014.) The information is broken down into columns as follows:
TA = Technical Area
BLDG = Building within the Technical Area
Waste Type = Haz (ardous), MLLW (Mixed Low Level Waste), TRU (Transuranic) and MTRU (Mixed Transuranic.)
First Fiscal Year Generated = Earliest Fiscal Year Generated
Last Fiscal Year Generated = Latest Fiscal Year Generated

TA	BLDG	Waste Type	First Fiscal Year Generated	Last Fiscal Year Generated
59	97	LLW	1991	1991
59	97	LLW	1993	1993
59	GEN-AREAS	LLW	1995	1995
59	GEN-AREAS	LLW	1987	1996
59	OH1	LLW	1994	2003
59	OH1	LLW	1995	1996
60	2	LLW	1995	1995
60	2	LLW	1995	1995
60	217	LLW	2006	2006
60	34	LLW	2009	2009
60	85	LLW	2004	2005
60	GEN-AREAS	LLW	2011	2013
60	GEN-AREAS	LLW	1995	2014
60	GEN-AREAS	LLW	2012	2012
60	LOT	LLW	1995	1995
61	GEN-AREAS	LLW	1990	2008
63	GEN-AREAS	LLW	2011	2011
63	GEN-AREAS	LLW	2010	2011
64	20	LLW	1995	1996
64	23	LLW	2001	2001
64	39	LLW	2004	2004
64	39	LLW	2004	2004
64	64	LLW	1995	1995
64	6420	LLW	1995	1995
64	GEN-AREAS	LLW	2001	2001
64	GEN-AREAS	LLW	1995	1995
72	GEN-AREAS	LLW	2004	2010
72	GEN-AREAS	LLW	2010	2010
73	GEN-AREAS	LLW	1995	2008
73	GEN-AREAS	LLW	2007	2007
99	GEN-AREAS	LLW	1981	1984
99	GEN-AREAS	LLW	2001	2002

Response to the NMED information request concerning a list of all LANL locations where hazardous waste, mixed waste, and non-hazardous TRU or low level radioactive waste is generated. This list includes sites recorded in WCATS generating waste as of 01-OCT-1979 through the date the query was run (26-JUN-2014.) The information is broken down into columns as follows:
TA = Technical Area
BLDG = Building within the Technical Area
Waste Type = Haz (ardous), MLLW (Mixed Low Level Waste), TRU (Transuranic) and MTRU (Mixed Transuranic.)
First Fiscal Year Generated = Earliest Fiscal Year Generated
Last Fiscal Year Generated = Latest Fiscal Year Generated

TA	BLDG	Waste Type	First Fiscal Year Generated	Last Fiscal Year Generated
00	1	MLLW	2008	2008
00	1009	MLLW	2008	2008
00	200	MLLW	2008	2008
00	29	MLLW	2008	2008
00	29	MLLW	2008	2008
00	29	MLLW	2008	2008
00	4	MLLW	2008	2008
00	49	MLLW	2008	2008
00	66	MLLW	2008	2008
00	GEN-AREAS	MLLW	1992	1992
00	GEN-AREAS	MLLW	2008	2008
00	GEN-AREAS	MLLW	1987	1990
00	GEN-AREAS	MLLW	2007	2007
01	1	MLLW	1994	1994
01	GEN-AREAS	MLLW	1995	1995
02	1	MLLW	1994	1997
02	1	MLLW	1998	1998
02	1	MLLW	1994	1994
02	1	MLLW	2003	2003
02	1	MLLW	2000	2000
02	29	MLLW	1997	1997
02	GEN-AREAS	MLLW	1990	1990
02	GEN-AREAS	MLLW	1989	2002
02	GEN-AREAS	MLLW	2003	2003
03	1	MLLW	1991	1991
03	102	MLLW	1987	2014
03	102	MLLW	1992	1992
03	102	MLLW	1991	2012
03	102	MLLW	1998	1998
03	102	MLLW	1991	1991
03	128	MLLW	1996	1996
03	15	MLLW	2000	2000

Response to the NMED information request concerning a list of all LANL locations where hazardous waste, mixed waste, and non-hazardous TRU or low level radioactive waste is generated. This list includes sites recorded in WCATS generating waste as of 01-OCT-1979 through the date the query was run (26-JUN-2014.) The information is broken down into columns as follows:
TA = Technical Area
BLDG = Building within the Technical Area
Waste Type = Haz (ardous), MLLW (Mixed Low Level Waste), TRU (Transuranic) and MTRU (Mixed Transuranic.)
First Fiscal Year Generated = Earliest Fiscal Year Generated
Last Fiscal Year Generated = Latest Fiscal Year Generated

TA	BLDG	Waste Type	First Fiscal Year Generated	Last Fiscal Year Generated
03	15	MLLW	2000	2000
03	16	MLLW	1987	2009
03	16	MLLW	1992	1996
03	16	MLLW	2003	2003
03	16	MLLW	1993	1993
03	16	MLLW	2007	2007
03	16	MLLW	1992	1994
03	16	MLLW	2003	2003
03	16	MLLW	2003	2003
03	16	MLLW	1998	1998
03	16	MLLW	1998	1998
03	16	MLLW	1998	2011
03	16	MLLW	1992	1992
03	164	MLLW	1991	1991
03	17	MLLW	1991	1991
03	1819	MLLW	1992	2014
03	20	MLLW	2000	2002
03	20	MLLW	2003	2003
03	2132	MLLW	1997	1997
03	216	MLLW	1991	1991
03	2237	MLLW	1995	1996
03	2237	MLLW	1996	1996
03	24	MLLW	1998	2001
03	271	MLLW	1996	1999
03	271	MLLW	1996	1996
03	271	MLLW	1999	2005
03	29	MLLW	1997	1997
03	29	MLLW	2013	2013
03	29	MLLW	2013	2013
03	29	MLLW	2010	2010
03	29	MLLW	2010	2014
03	3	MLLW	1998	1999

Response to the NMED information request concerning a list of all LANL locations where hazardous waste, mixed waste, and non-hazardous TRU or low level radioactive waste is generated. This list includes sites recorded in WCATS generating waste as of 01-OCT-1979 through the date the query was run (26-JUN-2014.) The information is broken down into columns as follows:
TA = Technical Area
BLDG = Building within the Technical Area
Waste Type = Haz (ardous), MLLW (Mixed Low Level Waste), TRU (Transuranic) and MTRU (Mixed Transuranic.)
First Fiscal Year Generated = Earliest Fiscal Year Generated
Last Fiscal Year Generated = Latest Fiscal Year Generated

TA	BLDG	Waste Type	First Fiscal Year Generated	Last Fiscal Year Generated
03	3	MLLW	2000	2000
03	30	MLLW	1987	2009
03	30	MLLW	1992	1993
03	30	MLLW	1995	1995
03	30	MLLW	2001	2009
03	30	MLLW	1991	1992
03	316	MLLW	1994	1994
03	317	MLLW	2002	2002
03	317	MLLW	2001	2001
03	32	MLLW	2004	2007
03	34	MLLW	1991	1992
03	34	MLLW	2007	2013
03	34	MLLW	2002	2012
03	34	MLLW	2004	2006
03	34	MLLW	2000	2002
03	38	MLLW	1996	1996
03	39	MLLW	1996	1996
03	39	MLLW	1996	1996
03	39	MLLW	1997	2001
03	40	MLLW	1985	1989
03	40	MLLW	1993	1993
03	410	MLLW	1987	1987
03	43	MLLW	1986	1991
03	4N	MLLW	1991	1991
03	502	MLLW	1988	1988
03	66	MLLW	1988	1993
03	66	MLLW	1992	1996
03	66	MLLW	1992	1992
03	66	MLLW	1992	1992
03	66	MLLW	1992	2013
03	66	MLLW	1991	1991
03	66	MLLW	2005	2010

Response to the NMED information request concerning a list of all LANL locations where hazardous waste, mixed waste, and non-hazardous TRU or low level radioactive waste is generated. This list includes sites recorded in WCATS generating waste as of 01-OCT-1979 through the date the query was run (26-JUN-2014.) The information is broken down into columns as follows:
TA = Technical Area
BLDG = Building within the Technical Area
Waste Type = Haz (ardous), MLLW (Mixed Low Level Waste), TRU (Transuranic) and MTRU (Mixed Transuranic.)
First Fiscal Year Generated = Earliest Fiscal Year Generated
Last Fiscal Year Generated = Latest Fiscal Year Generated

TA	BLDG	Waste Type	First Fiscal Year Generated	Last Fiscal Year Generated
03	66	MLLW	2008	2008
03	66	MLLW	2007	2013
03	66	MLLW	2007	2013
03	66	MLLW	2007	2007
03	66	MLLW	1997	2013
03	66	MLLW	1993	1993
03	66	MLLW	2004	2004
03	GEN-AREAS	MLLW	1986	2009
03	GEN-AREAS	MLLW	1999	2005
03	SM30	MLLW	1995	1995
03-CMR	1	MLLW	2000	2000
03-CMR	20	MLLW	2001	2006
03-CMR	20	MLLW	2003	2003
03-CMR	224	MLLW	1981	2012
03-CMR	224	MLLW	1982	1982
03-CMR	224	MLLW	1985	2010
03-CMR	224	MLLW	1982	1988
03-CMR	224	MLLW	1982	1990
03-CMR	232	MLLW	1982	1986
03-CMR	232	MLLW	1982	1983
03-CMR	24	MLLW	1999	2001
03-CMR	28	MLLW	1993	1993
03-CMR	29	MLLW	2000	2000
03-CMR	29	MLLW	1995	1995
03-CMR	29	MLLW	1993	1993
03-CMR	29	MLLW	1996	1996
03-CMR	29	MLLW	2002	2002
03-CMR	29	MLLW	1996	1996
03-CMR	29	MLLW	1995	2002
03-CMR	29	MLLW	2007	2007
03-CMR	29	MLLW	1999	1999
03-CMR	29	MLLW	1997	1998

Response to the NMED information request concerning a list of all LANL locations where hazardous waste, mixed waste, and non-hazardous TRU or low level radioactive waste is generated. This list includes sites recorded in WCATS generating waste as of 01-OCT-1979 through the date the query was run (26-JUN-2014.) The information is broken down into columns as follows:
TA = Technical Area
BLDG = Building within the Technical Area
Waste Type = Haz (ardous), MLLW (Mixed Low Level Waste), TRU (Transuranic) and MTRU (Mixed Transuranic.)
First Fiscal Year Generated = Earliest Fiscal Year Generated
Last Fiscal Year Generated = Latest Fiscal Year Generated

TA	BLDG	Waste Type	First Fiscal Year Generated	Last Fiscal Year Generated
03-CMR	29	MLLW	2008	2008
03-CMR	29	MLLW	2003	2003
03-CMR	29	MLLW	1998	1999
03-CMR	29	MLLW	1999	2000
03-CMR	29	MLLW	1991	1998
03-CMR	29	MLLW	2006	2006
03-CMR	29	MLLW	2003	2005
03-CMR	29	MLLW	1994	2000
03-CMR	29	MLLW	2002	2002
03-CMR	29	MLLW	1997	1997
03-CMR	29	MLLW	2002	2006
03-CMR	29	MLLW	1997	2000
03-CMR	29	MLLW	2000	2000
03-CMR	29	MLLW	1992	2006
03-CMR	29	MLLW	2001	2006
03-CMR	29	MLLW	2005	2005
03-CMR	29	MLLW	2002	2002
03-CMR	29	MLLW	1999	2000
03-CMR	29	MLLW	1992	1992
03-CMR	29	MLLW	1994	2000
03-CMR	29	MLLW	2002	2002
03-CMR	29	MLLW	1995	1996
03-CMR	29	MLLW	1994	1994
03-CMR	29	MLLW	2001	2002
03-CMR	29	MLLW	1996	1996
03-CMR	29	MLLW	1995	2000
03-CMR	29	MLLW	1999	2003
03-CMR	29	MLLW	2000	2001
03-CMR	29	MLLW	2006	2006
03-CMR	29	MLLW	1996	1999
03-CMR	29	MLLW	1997	1997
03-CMR	29	MLLW	1995	1995

Response to the NMED information request concerning a list of all LANL locations where hazardous waste, mixed waste, and non-hazardous TRU or low level radioactive waste is generated. This list includes sites recorded in WCATS generating waste as of 01-OCT-1979 through the date the query was run (26-JUN-2014.) The information is broken down into columns as follows:
TA = Technical Area
BLDG = Building within the Technical Area
Waste Type = Haz (ardous), MLLW (Mixed Low Level Waste), TRU (Transuranic) and MTRU (Mixed Transuranic.)
First Fiscal Year Generated = Earliest Fiscal Year Generated
Last Fiscal Year Generated = Latest Fiscal Year Generated

TA	BLDG	Waste Type	First Fiscal Year Generated	Last Fiscal Year Generated
03-CMR	29	MLLW	1999	2000
03-CMR	29	MLLW	1993	1993
03-CMR	29	MLLW	1995	1997
03-CMR	29	MLLW	2005	2006
03-CMR	29	MLLW	2004	2005
03-CMR	29	MLLW	1999	2000
03-CMR	29	MLLW	1996	2006
03-CMR	29	MLLW	2006	2006
03-CMR	29	MLLW	2006	2006
03-CMR	29	MLLW	1992	1998
03-CMR	29	MLLW	2000	2002
03-CMR	29	MLLW	2006	2012
03-CMR	29	MLLW	1994	1998
03-CMR	29	MLLW	2002	2011
03-CMR	29	MLLW	2010	2010
03-CMR	29	MLLW	2001	2001
03-CMR	29	MLLW	2003	2004
03-CMR	29	MLLW	1995	1995
03-CMR	29	MLLW	1996	1996
03-CMR	29	MLLW	2005	2005
03-CMR	29	MLLW	2001	2004
03-CMR	29	MLLW	1997	1997
03-CMR	29	MLLW	2003	2003
03-CMR	29	MLLW	2006	2007
03-CMR	29	MLLW	2001	2001
03-CMR	29	MLLW	1992	2008
03-CMR	29	MLLW	1994	2010
03-CMR	29	MLLW	1998	1998
03-CMR	29	MLLW	2005	2009
03-CMR	29	MLLW	1997	1997
03-CMR	29	MLLW	1998	1998
03-CMR	29	MLLW	1990	2000

Response to the NMED information request concerning a list of all LANL locations where hazardous waste, mixed waste, and non-hazardous TRU or low level radioactive waste is generated. This list includes sites recorded in WCATS generating waste as of 01-OCT-1979 through the date the query was run (26-JUN-2014.) The information is broken down into columns as follows:
TA = Technical Area
BLDG = Building within the Technical Area
Waste Type = Haz (ardous), MLLW (Mixed Low Level Waste), TRU (Transuranic) and MTRU (Mixed Transuranic.)
First Fiscal Year Generated = Earliest Fiscal Year Generated
Last Fiscal Year Generated = Latest Fiscal Year Generated

TA	BLDG	Waste Type	First Fiscal Year Generated	Last Fiscal Year Generated
03-CMR	29	MLLW	1995	1998
03-CMR	29	MLLW	2002	2006
03-CMR	29	MLLW	1998	2007
03-CMR	29	MLLW	2003	2007
03-CMR	29	MLLW	1993	2001
03-CMR	29	MLLW	1996	1996
03-CMR	29	MLLW	2001	2012
03-CMR	29	MLLW	1998	2002
03-CMR	29	MLLW	2000	2000
03-CMR	29	MLLW	2000	2000
03-CMR	29	MLLW	2007	2007
03-CMR	29	MLLW	1997	1997
03-CMR	29	MLLW	2002	2006
03-CMR	29	MLLW	2005	2010
03-CMR	29	MLLW	2001	2003
03-CMR	29	MLLW	2000	2006
03-CMR	29	MLLW	1995	2011
03-CMR	29	MLLW	1991	2011
03-CMR	29	MLLW	1995	1995
03-CMR	29	MLLW	2001	2007
03-CMR	29	MLLW	1994	2005
03-CMR	29	MLLW	1994	1995
03-CMR	29	MLLW	1994	1995
03-CMR	29	MLLW	1991	1992
03-CMR	29	MLLW	1995	1995
03-CMR	29	MLLW	2008	2009
03-CMR	29	MLLW	2003	2003
03-CMR	29	MLLW	2001	2001
03-CMR	29	MLLW	2002	2006
03-CMR	29	MLLW	2001	2001
03-CMR	29	MLLW	2001	2001
03-CMR	29	MLLW	1997	1997

Response to the NMED information request concerning a list of all LANL locations where hazardous waste, mixed waste, and non-hazardous TRU or low level radioactive waste is generated. This list includes sites recorded in WCATS generating waste as of 01-OCT-1979 through the date the query was run (26-JUN-2014.) The information is broken down into columns as follows:
TA = Technical Area
BLDG = Building within the Technical Area
Waste Type = Haz (ardous), MLLW (Mixed Low Level Waste), TRU (Transuranic) and MTRU (Mixed Transuranic.)
First Fiscal Year Generated = Earliest Fiscal Year Generated
Last Fiscal Year Generated = Latest Fiscal Year Generated

TA	BLDG	Waste Type	First Fiscal Year Generated	Last Fiscal Year Generated
03-CMR	29	MLLW	2006	2008
03-CMR	29	MLLW	2006	2007
03-CMR	29	MLLW	1999	2008
03-CMR	29	MLLW	2003	2008
03-CMR	29	MLLW	1997	1997
03-CMR	29	MLLW	1995	1995
03-CMR	29	MLLW	2000	2000
03-CMR	29	MLLW	1995	2011
03-CMR	3	MLLW	1999	1999
03-CMR	3	MLLW	1996	1996
03-CMR	GEN-AREAS	MLLW	1982	1982
03-CMR	GEN-AREAS	MLLW	1987	2008
03-CMR	WING1	MLLW	1989	1989
03-CMR	WING2	MLLW	1990	2007
03-CMR	WING3	MLLW	1987	1997
03-CMR	WING4	MLLW	1989	1996
03-CMR	WING5	MLLW	1990	2008
03-CMR	WING7	MLLW	1987	1994
03-CMR	WINGA	MLLW	1990	1990
03-CMR	WSUP	MLLW	1991	2008
05	GEN-AREAS	MLLW	2001	2001
08	1	MLLW	2003	2003
08	22	MLLW	1990	1990
08	27	MLLW	2000	2000
08	70	MLLW	1990	1990
09	29	MLLW	1991	1991
09	30	MLLW	1996	1996
09	42	MLLW	1995	1996
10	GEN-AREAS	MLLW	1997	1997
14	14	MLLW	1997	1997
14	286	MLLW	2004	2004
14	GEN-AREAS	MLLW	1999	1999

Response to the NMED information request concerning a list of all LANL locations where hazardous waste, mixed waste, and non-hazardous TRU or low level radioactive waste is generated. This list includes sites recorded in WCATS generating waste as of 01-OCT-1979 through the date the query was run (26-JUN-2014.) The information is broken down into columns as follows:
TA = Technical Area
BLDG = Building within the Technical Area
Waste Type = Haz (ardous), MLLW (Mixed Low Level Waste), TRU (Transuranic) and MTRU (Mixed Transuranic.)
First Fiscal Year Generated = Earliest Fiscal Year Generated
Last Fiscal Year Generated = Latest Fiscal Year Generated

TA	BLDG	Waste Type	First Fiscal Year Generated	Last Fiscal Year Generated
15	138	MLLW	1998	1998
15	138	MLLW	1997	1997
15	138022	MLLW	1997	1998
15	183	MLLW	1987	1990
15	183	MLLW	1990	2000
15	184	MLLW	1996	1998
15	184	MLLW	1998	1998
15	185	MLLW	2013	2014
15	285	MLLW	1998	1998
15	312	MLLW	2002	2002
15	312	MLLW	2002	2002
15	312	MLLW	2004	2005
15	44	MLLW	2004	2004
15	44	MLLW	2001	2001
15	534	MLLW	2008	2012
15	GEN-AREAS	MLLW	1987	2011
15	GEN-AREAS	MLLW	1990	2000
16	102	MLLW	1998	1998
16	114	MLLW	1996	1996
16	114	MLLW	1996	1996
16	1459	MLLW	2011	2011
16	200	MLLW	1986	1988
16	202	MLLW	2014	2014
16	205	MLLW	2007	2007
16	205	MLLW	2010	2010
16	205	MLLW	1996	2014
16	205	MLLW	2010	2010
16	205	MLLW	2011	2011
16	207	MLLW	2007	2007
16	207	MLLW	2013	2013
16	243	MLLW	1992	1992
16	243	MLLW	1991	1991

Response to the NMED information request concerning a list of all LANL locations where hazardous waste, mixed waste, and non-hazardous TRU or low level radioactive waste is generated. This list includes sites recorded in WCATS generating waste as of 01-OCT-1979 through the date the query was run (26-JUN-2014.) The information is broken down into columns as follows:
TA = Technical Area
BLDG = Building within the Technical Area
Waste Type = Haz (ardous), MLLW (Mixed Low Level Waste), TRU (Transuranic) and MTRU (Mixed Transuranic.)
First Fiscal Year Generated = Earliest Fiscal Year Generated
Last Fiscal Year Generated = Latest Fiscal Year Generated

TA	BLDG	Waste Type	First Fiscal Year Generated	Last Fiscal Year Generated
16	248	MLLW	1992	1992
16	248	MLLW	1991	1999
16	304	MLLW	2012	2012
16	400	MLLW	2009	2009
16	410	MLLW	1994	1994
16	88	MLLW	1990	1990
16	GEN-AREAS	MLLW	1989	2009
16	GEN-AREAS	MLLW	2000	2000
16	GEN-AREAS	MLLW	2001	2001
18	105	MLLW	1996	1996
18	105	MLLW	1996	1998
18	116	MLLW	2000	2000
18	116	MLLW	1995	1995
18	116	MLLW	2010	2010
18	120	MLLW	1996	1998
18	18	MLLW	1996	1996
18	18	MLLW	1996	1996
18	18	MLLW	1996	1996
18	18	MLLW	1996	1996
18	23	MLLW	2009	2009
18	23	MLLW	1999	1999
18	244790	MLLW	1998	1998
18	30	MLLW	2006	2007
18	32	MLLW	1999	2011
18	32	MLLW	1999	1999
18	39	MLLW	1996	1998
18	43	MLLW	1996	1996
18	GEN-AREAS	MLLW	1996	1998
18	GEN-AREAS	MLLW	2001	2001
18	RSTO-05583	MLLW	2011	2011
21	116	MLLW	1997	1997
21	150	MLLW	1987	1998

Response to the NMED information request concerning a list of all LANL locations where hazardous waste, mixed waste, and non-hazardous TRU or low level radioactive waste is generated. This list includes sites recorded in WCATS generating waste as of 01-OCT-1979 through the date the query was run (26-JUN-2014.) The information is broken down into columns as follows:
TA = Technical Area
BLDG = Building within the Technical Area
Waste Type = Haz (ardous), MLLW (Mixed Low Level Waste), TRU (Transuranic) and MTRU (Mixed Transuranic.)
First Fiscal Year Generated = Earliest Fiscal Year Generated
Last Fiscal Year Generated = Latest Fiscal Year Generated

TA	BLDG	Waste Type	First Fiscal Year Generated	Last Fiscal Year Generated
21	150	MLLW	2001	2001
21	150	MLLW	1991	1991
21	150	MLLW	1991	1993
21	150	MLLW	1997	1998
21	150	MLLW	1991	1993
21	1500	MLLW	1991	1991
21	152	MLLW	1991	2008
21	152	MLLW	1997	1997
21	152	MLLW	1992	1998
21	152	MLLW	1995	1997
21	152	MLLW	1995	2001
21	152	MLLW	2011	2011
21	155	MLLW	2010	2010
21	155	MLLW	1993	1993
21	155	MLLW	2003	2007
21	155	MLLW	1998	1998
21	155	MLLW	2007	2007
21	155	MLLW	2009	2010
21	2	MLLW	2010	2010
21	2	MLLW	1995	1995
21	2	MLLW	1996	1996
21	205	MLLW	2002	2007
21	209	MLLW	1987	2011
21	209	MLLW	1996	1998
21	209	MLLW	2005	2007
21	209	MLLW	2006	2011
21	209	MLLW	2007	2007
21	209	MLLW	2010	2010
21	21024	MLLW	1995	1996
21	212	MLLW	2001	2002
21	224	MLLW	1980	1980
21	224	MLLW	1980	2010

Response to the NMED information request concerning a list of all LANL locations where hazardous waste, mixed waste, and non-hazardous TRU or low level radioactive waste is generated. This list includes sites recorded in WCATS generating waste as of 01-OCT-1979 through the date the query was run (26-JUN-2014.) The information is broken down into columns as follows:
TA = Technical Area
BLDG = Building within the Technical Area
Waste Type = Haz (ardous), MLLW (Mixed Low Level Waste), TRU (Transuranic) and MTRU (Mixed Transuranic.)
First Fiscal Year Generated = Earliest Fiscal Year Generated
Last Fiscal Year Generated = Latest Fiscal Year Generated

TA	BLDG	Waste Type	First Fiscal Year Generated	Last Fiscal Year Generated
21	257	MLLW	1988	1988
21	257	MLLW	2010	2010
21	286	MLLW	1990	2004
21	3	MLLW	1996	1996
21	3	MLLW	1992	1992
21	3	MLLW	1992	1997
21	3	MLLW	1993	1993
21	3	MLLW	1996	1996
21	3	MLLW	1993	1993
21	3	MLLW	1992	1992
21	3	MLLW	1996	1996
21	3	MLLW	1995	1996
21	31	MLLW	1994	1998
21	357	MLLW	2011	2011
21	3N	MLLW	1993	1993
21	3N	MLLW	1991	1991
21	4	MLLW	1993	1993
21	4	MLLW	1992	1994
21	4	MLLW	1991	1991
21	5	MLLW	2010	2010
21	5	MLLW	2010	2010
21	5	MLLW	1996	1996
21	5	MLLW	1990	2004
21	5	MLLW	1991	1998
21	5	MLLW	2011	2011
21	59	MLLW	1991	1991
21	GEN-AREAS	MLLW	1986	2011
21	GEN-AREAS	MLLW	2001	2007
21	GEN-AREAS	MLLW	2010	2012
21	GEN-AREAS	MLLW	2012	2012
21	GEN-AREAS	MLLW	2010	2010
22	1	MLLW	1998	1998

Response to the NMED information request concerning a list of all LANL locations where hazardous waste, mixed waste, and non-hazardous TRU or low level radioactive waste is generated. This list includes sites recorded in WCATS generating waste as of 01-OCT-1979 through the date the query was run (26-JUN-2014.) The information is broken down into columns as follows:
TA = Technical Area
BLDG = Building within the Technical Area
Waste Type = Haz (ardous), MLLW (Mixed Low Level Waste), TRU (Transuranic) and MTRU (Mixed Transuranic.)
First Fiscal Year Generated = Earliest Fiscal Year Generated
Last Fiscal Year Generated = Latest Fiscal Year Generated

TA	BLDG	Waste Type	First Fiscal Year Generated	Last Fiscal Year Generated
22	90	MLLW	1987	1987
22	91	MLLW	1988	1988
27	GEN-AREAS	MLLW	1997	1997
29	29	MLLW	2006	2006
29	3	MLLW	1996	1996
32	GEN-AREAS	MLLW	1996	1996
33	113	MLLW	1990	1991
33	114	MLLW	1990	1990
33	36	MLLW	2000	2000
33	39	MLLW	1997	1998
33	6	MLLW	1997	1997
33	86	MLLW	1996	1996
33	86	MLLW	1996	1997
33	86	MLLW	1993	1993
33	86	MLLW	2001	2001
33	GEN-AREAS	MLLW	1989	1992
33	GEN-AREAS	MLLW	2005	2006
35	1	MLLW	1992	1992
35	128	MLLW	1996	1996
35	128	MLLW	1996	1996
35	2	MLLW	1991	1996
35	2	MLLW	1992	1992
35	2	MLLW	1992	1992
35	2	MLLW	1990	1995
35	2	MLLW	2002	2002
35	2	MLLW	1992	1993
35	2	MLLW	1993	1994
35	2	MLLW	1995	1995
35	2	MLLW	1991	1991
35	2	MLLW	2007	2008
35	207	MLLW	1987	1987
35	213	MLLW	1988	1991

Response to the NMED information request concerning a list of all LANL locations where hazardous waste, mixed waste, and non-hazardous TRU or low level radioactive waste is generated. This list includes sites recorded in WCATS generating waste as of 01-OCT-1979 through the date the query was run (26-JUN-2014.) The information is broken down into columns as follows:
TA = Technical Area
BLDG = Building within the Technical Area
Waste Type = Haz (ardous), MLLW (Mixed Low Level Waste), TRU (Transuranic) and MTRU (Mixed Transuranic.)
First Fiscal Year Generated = Earliest Fiscal Year Generated
Last Fiscal Year Generated = Latest Fiscal Year Generated

TA	BLDG	Waste Type	First Fiscal Year Generated	Last Fiscal Year Generated
35	213	MLLW	2004	2004
35	213	MLLW	1992	1992
35	213	MLLW	1994	1994
35	213	MLLW	1997	1997
35	213	MLLW	2008	2008
35	215	MLLW	1997	1997
35	27	MLLW	1991	1991
35	27	MLLW	1990	1999
35	27	MLLW	1993	1993
35	27	MLLW	2000	2000
35	34	MLLW	1990	1997
35	34	MLLW	1997	1997
35	34	MLLW	1999	1999
35	85	MLLW	2007	2008
35	GEN-AREAS	MLLW	1991	2008
35	GEN-AREAS	MLLW	2005	2006
35	SM30	MLLW	1995	1995
36	104	MLLW	2006	2006
36	185	MLLW	2011	2011
36	185	MLLW	2011	2011
36	5	MLLW	2007	2007
36	8	MLLW	1990	1992
36	84	MLLW	1991	1991
36	GEN-AREAS	MLLW	1986	1990
39	102	MLLW	2001	2001
39	107	MLLW	2001	2001
39	142	MLLW	1990	1997
39	39	MLLW	2001	2001
39	69	MLLW	1987	1987
39	GEN-AREAS	MLLW	1992	1992
39	GEN-AREAS	MLLW	2001	2010
41	205	MLLW	2002	2002

Response to the NMED information request concerning a list of all LANL locations where hazardous waste, mixed waste, and non-hazardous TRU or low level radioactive waste is generated. This list includes sites recorded in WCATS generating waste as of 01-OCT-1979 through the date the query was run (26-JUN-2014.) The information is broken down into columns as follows:
TA = Technical Area
BLDG = Building within the Technical Area
Waste Type = Haz (ardous), MLLW (Mixed Low Level Waste), TRU (Transuranic) and MTRU (Mixed Transuranic.)
First Fiscal Year Generated = Earliest Fiscal Year Generated
Last Fiscal Year Generated = Latest Fiscal Year Generated

TA	BLDG	Waste Type	First Fiscal Year Generated	Last Fiscal Year Generated
41	4	MLLW	1986	1993
41	4	MLLW	1991	1992
41	4	MLLW	1992	1992
41	4	MLLW	1991	1992
41	4	MLLW	1993	1993
41	4	MLLW	2002	2002
41	4	MLLW	1999	2000
41	GEN-AREAS	MLLW	1986	1995
43	1	MLLW	1986	2014
43	1	MLLW	1993	1993
43	1	MLLW	1993	1993
43	1	MLLW	1993	1993
43	1	MLLW	1994	1994
43	1	MLLW	1993	1993
43	1	MLLW	1994	2000
43	1	MLLW	1995	1995
43	1	MLLW	2010	2010
43	1	MLLW	1993	1993
43	1	MLLW	1994	1994
43	1	MLLW	1993	1993
43	1	MLLW	1995	1995
43	1	MLLW	1991	1992
43	1	MLLW	1993	1993
43	1	MLLW	2008	2010
43	12	MLLW	2010	2010
43	4347	MLLW	1991	1993
43	4347	MLLW	1991	1993
43	49	MLLW	2009	2009
43	GEN-AREAS	MLLW	1987	1991
43	N/A	MLLW	1992	1992
46	1	MLLW	1991	1991
46	158	MLLW	1990	2013

Response to the NMED information request concerning a list of all LANL locations where hazardous waste, mixed waste, and non-hazardous TRU or low level radioactive waste is generated. This list includes sites recorded in WCATS generating waste as of 01-OCT-1979 through the date the query was run (26-JUN-2014.) The information is broken down into columns as follows:
TA = Technical Area
BLDG = Building within the Technical Area
Waste Type = Haz (ardous), MLLW (Mixed Low Level Waste), TRU (Transuranic) and MTRU (Mixed Transuranic.)
First Fiscal Year Generated = Earliest Fiscal Year Generated
Last Fiscal Year Generated = Latest Fiscal Year Generated

TA	BLDG	Waste Type	First Fiscal Year Generated	Last Fiscal Year Generated
46	185	MLLW	1991	1992
46	200	MLLW	2002	2008
46	24	MLLW	1988	1995
46	24	MLLW	1992	1992
46	24	MLLW	1992	2001
46	24	MLLW	1995	1995
46	25	MLLW	1991	2001
46	25	MLLW	2001	2004
46	287	MLLW	1995	1995
46	30	MLLW	2011	2011
46	31	MLLW	2007	2007
46	31	MLLW	2009	2009
46	31	MLLW	2006	2007
46	41	MLLW	2007	2007
46	41	MLLW	2007	2007
46	42	MLLW	1991	1991
46	58	MLLW	1996	1996
46	58	MLLW	1996	1996
46	64	MLLW	1994	1994
46	76	MLLW	1993	1993
48	1	MLLW	1986	2014
48	1	MLLW	1990	1999
48	1	MLLW	2004	2004
48	1	MLLW	2008	2014
48	1	MLLW	2002	2014
48	1	MLLW	1993	1993
48	1	MLLW	2005	2011
48	1	MLLW	2002	2011
48	1	MLLW	1990	1992
48	1	MLLW	1995	1998
48	1	MLLW	1992	1992
48	1	MLLW	1999	1999

Response to the NMED information request concerning a list of all LANL locations where hazardous waste, mixed waste, and non-hazardous TRU or low level radioactive waste is generated. This list includes sites recorded in WCATS generating waste as of 01-OCT-1979 through the date the query was run (26-JUN-2014.) The information is broken down into columns as follows:
TA = Technical Area
BLDG = Building within the Technical Area
Waste Type = Haz (ardous), MLLW (Mixed Low Level Waste), TRU (Transuranic) and MTRU (Mixed Transuranic.)
First Fiscal Year Generated = Earliest Fiscal Year Generated
Last Fiscal Year Generated = Latest Fiscal Year Generated

TA	BLDG	Waste Type	First Fiscal Year Generated	Last Fiscal Year Generated
48	1	MLLW	1992	2011
48	1	MLLW	1993	1993
48	1	MLLW	1992	1992
48	1	MLLW	1991	1991
48	1	MLLW	2013	2014
48	1	MLLW	1992	2014
48	1	MLLW	1992	2011
48	1	MLLW	1999	2005
48	1	MLLW	2007	2011
48	1	MLLW	2007	2011
48	1	MLLW	1991	1994
48	1	MLLW	1990	2006
48	1	MLLW	1991	1992
48	1	MLLW	1990	1992
48	1	MLLW	1996	2006
48	1	MLLW	2003	2003
48	1	MLLW	1992	2000
48	1	MLLW	2004	2010
48	1	MLLW	2012	2012
48	1	MLLW	1992	2012
48	1	MLLW	1995	1995
48	1	MLLW	1991	2009
48	1	MLLW	1990	1990
48	1	MLLW	1992	2014
48	1	MLLW	2009	2009
48	1	MLLW	1992	1992
48	1	MLLW	2002	2002
48	1	MLLW	2011	2011
48	1	MLLW	1992	2014
48	1	MLLW	2003	2005
48	1	MLLW	2000	2000
48	1	MLLW	2003	2003

Response to the NMED information request concerning a list of all LANL locations where hazardous waste, mixed waste, and non-hazardous TRU or low level radioactive waste is generated. This list includes sites recorded in WCATS generating waste as of 01-OCT-1979 through the date the query was run (26-JUN-2014.) The information is broken down into columns as follows:
TA = Technical Area
BLDG = Building within the Technical Area
Waste Type = Haz (ardous), MLLW (Mixed Low Level Waste), TRU (Transuranic) and MTRU (Mixed Transuranic.)
First Fiscal Year Generated = Earliest Fiscal Year Generated
Last Fiscal Year Generated = Latest Fiscal Year Generated

TA	BLDG	Waste Type	First Fiscal Year Generated	Last Fiscal Year Generated
48	1	MLLW	1992	2002
48	1	MLLW	1991	1991
48	1	MLLW	2002	2004
48	1	MLLW	2007	2008
48	1	MLLW	2004	2008
48	17	MLLW	1991	1992
48	180	MLLW	2009	2009
48	28	MLLW	2001	2003
48	38	MLLW	1992	1992
48	45	MLLW	1992	1992
48	45	MLLW	1992	1992
48	45	MLLW	1990	1990
48	45	MLLW	2006	2011
48	45	MLLW	1992	1992
48	45	MLLW	2000	2002
48	45	MLLW	1995	1995
48	45	MLLW	1991	1991
48	45	MLLW	1992	1992
48	45	MLLW	1991	1992
48	45	MLLW	1992	1992
48	45	MLLW	1999	2003
48	45	MLLW	2000	2000
48	GEN-AREAS	MLLW	2003	2007
48	GEN-AREAS	MLLW	1988	1999
48	RC-1	MLLW	1997	1997
48	RC-1	MLLW	1995	1995
49	224	MLLW	2010	2010
50	1	MLLW	1987	2011
50	1	MLLW	1994	1999
50	1	MLLW	1991	1991
50	1	MLLW	2000	2000
50	1	MLLW	1997	2002

Response to the NMED information request concerning a list of all LANL locations where hazardous waste, mixed waste, and non-hazardous TRU or low level radioactive waste is generated. This list includes sites recorded in WCATS generating waste as of 01-OCT-1979 through the date the query was run (26-JUN-2014.) The information is broken down into columns as follows:
TA = Technical Area
BLDG = Building within the Technical Area
Waste Type = Haz (ardous), MLLW (Mixed Low Level Waste), TRU (Transuranic) and MTRU (Mixed Transuranic.)
First Fiscal Year Generated = Earliest Fiscal Year Generated
Last Fiscal Year Generated = Latest Fiscal Year Generated

TA	BLDG	Waste Type	First Fiscal Year Generated	Last Fiscal Year Generated
50	1	MLLW	1995	1995
50	1	MLLW	1995	1995
50	1	MLLW	1993	1994
50	1	MLLW	1991	2005
50	1	MLLW	1990	1999
50	1	MLLW	2000	2000
50	1	MLLW	1994	1994
50	1	MLLW	1992	1996
50	1	MLLW	1992	1992
50	1	MLLW	1991	2002
50	1	MLLW	1999	2001
50	1	MLLW	1994	1994
50	1	MLLW	2002	2008
50	1	MLLW	1999	1999
50	1	MLLW	1980	2001
50	1	MLLW	2011	2011
50	1	MLLW	2003	2003
50	1	MLLW	2007	2007
50	1009	MLLW	2002	2002
50	1009	MLLW	1996	1996
50	114	MLLW	1999	1999
50	114	MLLW	1999	1999
50	1147	MLLW	1994	1995
50	1147	MLLW	1994	1995
50	1147	MLLW	1995	1995
50	152	MLLW	1997	1997
50	152	MLLW	1997	1997
50	224	MLLW	1980	2012
50	224	MLLW	1980	2010
50	224	MLLW	1982	1982
50	232	MLLW	2013	2014
50	29	MLLW	1990	1990

Response to the NMED information request concerning a list of all LANL locations where hazardous waste, mixed waste, and non-hazardous TRU or low level radioactive waste is generated. This list includes sites recorded in WCATS generating waste as of 01-OCT-1979 through the date the query was run (26-JUN-2014.) The information is broken down into columns as follows:
TA = Technical Area
BLDG = Building within the Technical Area
Waste Type = Haz (ardous), MLLW (Mixed Low Level Waste), TRU (Transuranic) and MTRU (Mixed Transuranic.)
First Fiscal Year Generated = Earliest Fiscal Year Generated
Last Fiscal Year Generated = Latest Fiscal Year Generated

TA	BLDG	Waste Type	First Fiscal Year Generated	Last Fiscal Year Generated
50	29	MLLW	1991	1991
50	37	MLLW	1987	2014
50	37	MLLW	1996	1998
50	4	MLLW	1996	1996
50	45	MLLW	2000	2000
50	69	MLLW	1987	2014
50	69	MLLW	2009	2014
50	69	MLLW	1997	1997
50	69	MLLW	2014	2014
50	69	MLLW	2007	2007
50	GEN-AREAS	MLLW	1980	1980
50	GEN-AREAS	MLLW	1987	2008
50	GEN-AREAS	MLLW	2003	2006
51	11	MLLW	2001	2001
51	12	MLLW	1995	1995
51	21	MLLW	1994	1994
51	21	MLLW	2002	2002
51	73	MLLW	1998	1998
51	73	MLLW	1998	1998
51	GEN-AREAS	MLLW	2002	2002
51	GEN-AREAS	MLLW	2001	2001
52	1	MLLW	1989	1990
52	1	MLLW	2000	2000
53	1	MLLW	1990	1998
53	1	MLLW	1996	1997
53	1	MLLW	1998	1999
53	1	MLLW	1996	1996
53	1	MLLW	1993	1994
53	1	MLLW	1991	1991
53	1	MLLW	1994	1994
53	1	MLLW	1995	1996
53	1	MLLW	1992	1992

Response to the NMED information request concerning a list of all LANL locations where hazardous waste, mixed waste, and non-hazardous TRU or low level radioactive waste is generated. This list includes sites recorded in WCATS generating waste as of 01-OCT-1979 through the date the query was run (26-JUN-2014.) The information is broken down into columns as follows:
TA = Technical Area
BLDG = Building within the Technical Area
Waste Type = Haz (ardous), MLLW (Mixed Low Level Waste), TRU (Transuranic) and MTRU (Mixed Transuranic.)
First Fiscal Year Generated = Earliest Fiscal Year Generated
Last Fiscal Year Generated = Latest Fiscal Year Generated

TA	BLDG	Waste Type	First Fiscal Year Generated	Last Fiscal Year Generated
53	1	MLLW	1991	1991
53	1146	MLLW	2004	2004
53	1180	MLLW	2002	2002
53	15	MLLW	1991	1991
53	17	MLLW	1992	1992
53	2	MLLW	1989	1998
53	2	MLLW	1991	1991
53	25	MLLW	1992	1992
53	25	MLLW	1991	1992
53	3	MLLW	1987	2006
53	3	MLLW	2006	2006
53	3	MLLW	1995	1995
53	3	MLLW	1996	1996
53	3	MLLW	1992	1992
53	3	MLLW	1993	2010
53	3	MLLW	2000	2001
53	3	MLLW	1997	1997
53	3	MLLW	2007	2007
53	30	MLLW	1997	1997
53	30	MLLW	2003	2003
53	30	MLLW	2000	2001
53	30	MLLW	2003	2006
53	30	MLLW	2008	2008
53	4	MLLW	1993	1993
53	43	MLLW	1992	1992
53	622	MLLW	2004	2004
53	622	MLLW	2004	2004
53	622	MLLW	1995	1995
53	7	MLLW	2002	2003
53	7	MLLW	1999	1999
53	737	MLLW	2002	2002
53	8	MLLW	2006	2006

Response to the NMED information request concerning a list of all LANL locations where hazardous waste, mixed waste, and non-hazardous TRU or low level radioactive waste is generated. This list includes sites recorded in WCATS generating waste as of 01-OCT-1979 through the date the query was run (26-JUN-2014.) The information is broken down into columns as follows:
TA = Technical Area
BLDG = Building within the Technical Area
Waste Type = Haz (ardous), MLLW (Mixed Low Level Waste), TRU (Transuranic) and MTRU (Mixed Transuranic.)
First Fiscal Year Generated = Earliest Fiscal Year Generated
Last Fiscal Year Generated = Latest Fiscal Year Generated

TA	BLDG	Waste Type	First Fiscal Year Generated	Last Fiscal Year Generated
53	8	MLLW	2003	2013
53	83	MLLW	1992	1992
53	882	MLLW	1998	1998
53	883	MLLW	1990	1992
53	883	MLLW	1990	1992
53	898	MLLW	1998	1998
53	984	MLLW	2014	2014
53	GEN-AREAS	MLLW	2006	2006
53	GEN-AREAS	MLLW	1987	2004
53	GEN-AREAS	MLLW	2007	2007
53	MPF4	MLLW	1993	1993
53	MPF4	MLLW	1995	1997
53	MPF8	MLLW	1993	1993
54	1	MLLW	2000	2000
54	1009	MLLW	1996	1996
54	1009	MLLW	1996	1996
54	1009	MLLW	1994	1996
54	1009	MLLW	2000	2013
54	1009	MLLW	1996	1996
54	1009	MLLW	2004	2004
54	1009	MLLW	1996	1996
54	102	MLLW	2010	2010
54	1051	MLLW	2006	2006
54	1051	MLLW	2005	2006
54	132	MLLW	1991	1991
54	134	MLLW	1991	1991
54	153	MLLW	1996	2013
54	215	MLLW	1994	2005
54	215	MLLW	2001	2001
54	215	MLLW	1987	2004
54	215	MLLW	2007	2007
54	224	MLLW	2013	2013

Response to the NMED information request concerning a list of all LANL locations where hazardous waste, mixed waste, and non-hazardous TRU or low level radioactive waste is generated. This list includes sites recorded in WCATS generating waste as of 01-OCT-1979 through the date the query was run (26-JUN-2014.) The information is broken down into columns as follows:
TA = Technical Area
BLDG = Building within the Technical Area
Waste Type = Haz (ardous), MLLW (Mixed Low Level Waste), TRU (Transuranic) and MTRU (Mixed Transuranic.)
First Fiscal Year Generated = Earliest Fiscal Year Generated
Last Fiscal Year Generated = Latest Fiscal Year Generated

TA	BLDG	Waste Type	First Fiscal Year Generated	Last Fiscal Year Generated
54	224	MLLW	2007	2014
54	224	MLLW	1990	2013
54	224	MLLW	1982	2011
54	224	MLLW	2013	2013
54	224	MLLW	1988	2003
54	224	MLLW	2007	2010
54	224	MLLW	2013	2013
54	224	MLLW	1980	2012
54	229	MLLW	2012	2014
54	229	MLLW	2013	2013
54	229	MLLW	1998	1998
54	230	MLLW	2012	2013
54	230	MLLW	1998	2009
54	231	MLLW	2013	2014
54	231	MLLW	2010	2011
54	231	MLLW	2010	2014
54	231	MLLW	2008	2010
54	231	MLLW	2011	2012
54	232	MLLW	2014	2014
54	232	MLLW	2012	2014
54	232	MLLW	2014	2014
54	232	MLLW	2013	2014
54	232	MLLW	2014	2014
54	239	MLLW	1998	1998
54	242	MLLW	2000	2000
54	242	MLLW	2000	2000
54	281-LLWS	MLLW	2014	2014
54	37	MLLW	1989	2005
54	37	MLLW	1989	1989
54	37	MLLW	1989	1989
54	375	MLLW	1980	2014
54	375	MLLW	2013	2014

Response to the NMED information request concerning a list of all LANL locations where hazardous waste, mixed waste, and non-hazardous TRU or low level radioactive waste is generated. This list includes sites recorded in WCATS generating waste as of 01-OCT-1979 through the date the query was run (26-JUN-2014.) The information is broken down into columns as follows:
TA = Technical Area
BLDG = Building within the Technical Area
Waste Type = Haz (ardous), MLLW (Mixed Low Level Waste), TRU (Transuranic) and MTRU (Mixed Transuranic.)
First Fiscal Year Generated = Earliest Fiscal Year Generated
Last Fiscal Year Generated = Latest Fiscal Year Generated

TA	BLDG	Waste Type	First Fiscal Year Generated	Last Fiscal Year Generated
54	375	MLLW	2014	2014
54	39	MLLW	2004	2004
54	39	MLLW	1995	2001
54	412	MLLW	2012	2014
54	412	MLLW	2014	2014
54	412	MLLW	2014	2014
54	426	MLLW	2004	2010
54	426	MLLW	2010	2010
54	49	MLLW	1998	2001
54	49	MLLW	1998	2001
54	497	MLLW	2009	2009
54	497	MLLW	2009	2009
54	54	MLLW	2002	2002
54	541024	MLLW	1996	1996
54	541024	MLLW	1996	1996
54	548	MLLW	2007	2007
54	548	MLLW	2007	2007
54	64	MLLW	1993	1996
54	8	MLLW	1996	2014
54	8	MLLW	1996	1998
54	AREA L	MLLW	1996	1996
54	BONEYARD	MLLW	2013	2013
54	GEN-AREAS	MLLW	1980	2010
54	GEN-AREAS	MLLW	1987	2006
54	GEN-AREAS	MLLW	2010	2011
54	GEN-AREAS	MLLW	1987	2010
54	GEN-AREAS	MLLW	1994	1994
54	GEN-AREAS	MLLW	2006	2006
54	OUT-S	MLLW	1996	1996
54	PAD01	MLLW	2012	2013
54	PAD07	MLLW	2010	2013
54	PAD10	MLLW	2012	2013

Response to the NMED information request concerning a list of all LANL locations where hazardous waste, mixed waste, and non-hazardous TRU or low level radioactive waste is generated. This list includes sites recorded in WCATS generating waste as of 01-OCT-1979 through the date the query was run (26-JUN-2014.) The information is broken down into columns as follows:
TA = Technical Area
BLDG = Building within the Technical Area
Waste Type = Haz (ardous), MLLW (Mixed Low Level Waste), TRU (Transuranic) and MTRU (Mixed Transuranic.)
First Fiscal Year Generated = Earliest Fiscal Year Generated
Last Fiscal Year Generated = Latest Fiscal Year Generated

TA	BLDG	Waste Type	First Fiscal Year Generated	Last Fiscal Year Generated
54	STAGER56	MLLW	2013	2013
54	YARD	MLLW	2004	2004
54-G	102	MLLW	2010	2010
54-G	224	MLLW	2008	2013
54-G	229	MLLW	2012	2013
54-G	230	MLLW	2012	2013
54-G	231	MLLW	2010	2014
54-G	232	MLLW	2010	2010
54-G	33	MLLW	1992	1992
54-G	49	MLLW	1989	1995
54-G	GEN-AREAS	MLLW	1989	1996
54-G	PAD01	MLLW	2013	2013
54-G	STAGER56	MLLW	2013	2013
54-G-WEST	1009	MLLW	1995	1996
54-J	239	MLLW	1998	1998
54-J-DISP	GEN-AREAS	MLLW	1990	1990
54-L	39	MLLW	1991	1991
54-L	GEN-AREAS	MLLW	1986	2008
55	152	MLLW	1998	1998
55	153	MLLW	2013	2013
55	170	MLLW	1992	1992
55	2	MLLW	1985	1991
55	2	MLLW	1996	1996
55	2	MLLW	1991	2010
55	2	MLLW	2003	2003
55	212	MLLW	2002	2003
55	224	MLLW	2010	2010
55	224	MLLW	1981	1985
55	3	MLLW	1989	1995
55	3	MLLW	2002	2003
55	3	MLLW	2007	2011
55	3	MLLW	1995	1995

Response to the NMED information request concerning a list of all LANL locations where hazardous waste, mixed waste, and non-hazardous TRU or low level radioactive waste is generated. This list includes sites recorded in WCATS generating waste as of 01-OCT-1979 through the date the query was run (26-JUN-2014.) The information is broken down into columns as follows:
TA = Technical Area
BLDG = Building within the Technical Area
Waste Type = Haz (ardous), MLLW (Mixed Low Level Waste), TRU (Transuranic) and MTRU (Mixed Transuranic.)
First Fiscal Year Generated = Earliest Fiscal Year Generated
Last Fiscal Year Generated = Latest Fiscal Year Generated

TA	BLDG	Waste Type	First Fiscal Year Generated	Last Fiscal Year Generated
55	3	MLLW	2009	2009
55	3	MLLW	2002	2002
55	3	MLLW	1996	2011
55	3	MLLW	2000	2004
55	4	MLLW	1995	1995
55	4	MLLW	2005	2005
55	4	MLLW	2008	2008
55	4	MLLW	2008	2008
55	4	MLLW	1999	2009
55	4	MLLW	2002	2003
55	4	MLLW	2006	2006
55	4	MLLW	2003	2003
55	4	MLLW	2002	2002
55	4	MLLW	2006	2008
55	4	MLLW	2007	2007
55	4	MLLW	2002	2012
55	4	MLLW	2005	2005
55	4	MLLW	1995	1995
55	4	MLLW	1994	1994
55	4	MLLW	2013	2013
55	4	MLLW	1999	1999
55	4	MLLW	1998	2014
55	4	MLLW	1998	2002
55	4	MLLW	1999	1999
55	4	MLLW	1994	2011
55	4	MLLW	2009	2013
55	4	MLLW	2002	2009
55	4	MLLW	2000	2013
55	4	MLLW	2014	2014
55	42	MLLW	1992	1992
55	55	MLLW	2010	2012
55	55	MLLW	2002	2013

Response to the NMED information request concerning a list of all LANL locations where hazardous waste, mixed waste, and non-hazardous TRU or low level radioactive waste is generated. This list includes sites recorded in WCATS generating waste as of 01-OCT-1979 through the date the query was run (26-JUN-2014.) The information is broken down into columns as follows:
TA = Technical Area
BLDG = Building within the Technical Area
Waste Type = Haz (ardous), MLLW (Mixed Low Level Waste), TRU (Transuranic) and MTRU (Mixed Transuranic.)
First Fiscal Year Generated = Earliest Fiscal Year Generated
Last Fiscal Year Generated = Latest Fiscal Year Generated

TA	BLDG	Waste Type	First Fiscal Year Generated	Last Fiscal Year Generated
55	GEN-AREAS	MLLW	2003	2013
55	GEN-AREAS	MLLW	1989	2010
55	PAD	MLLW	2003	2014
55	PAD	MLLW	2012	2012
55	PAD	MLLW	1999	2013
55	PAD	MLLW	2012	2012
55-PF4	100-AREA	MLLW	1988	2005
55-PF4	200-AREA	MLLW	1990	1992
55-PF4	224	MLLW	1980	1980
55-PF4	224	MLLW	1980	1980
55-PF4	224	MLLW	1980	2012
55-PF4	224	MLLW	1981	2012
55-PF4	3	MLLW	1996	1996
55-PF4	4	MLLW	1995	2003
55-PF4	4	MLLW	1995	1995
55-PF4	4	MLLW	2005	2008
55-PF4	4	MLLW	1999	2002
55-PF4	4	MLLW	2000	2003
55-PF4	4	MLLW	1995	1995
55-PF4	4	MLLW	2005	2005
55-PF4	4	MLLW	1991	1991
55-PF4	4	MLLW	2003	2003
55-PF4	4	MLLW	2001	2001
55-PF4	4	MLLW	1997	2001
55-PF4	4	MLLW	1997	2008
55-PF4	4	MLLW	2005	2005
55-PF4	4	MLLW	2002	2008
55-PF4	4	MLLW	2004	2004
55-PF4	4	MLLW	1997	1997
55-PF4	4	MLLW	1995	1999
55-PF4	4	MLLW	1999	2000
55-PF4	4	MLLW	1997	2002

Response to the NMED information request concerning a list of all LANL locations where hazardous waste, mixed waste, and non-hazardous TRU or low level radioactive waste is generated. This list includes sites recorded in WCATS generating waste as of 01-OCT-1979 through the date the query was run (26-JUN-2014.) The information is broken down into columns as follows:
TA = Technical Area
BLDG = Building within the Technical Area
Waste Type = Haz (ardous), MLLW (Mixed Low Level Waste), TRU (Transuranic) and MTRU (Mixed Transuranic.)
First Fiscal Year Generated = Earliest Fiscal Year Generated
Last Fiscal Year Generated = Latest Fiscal Year Generated

TA	BLDG	Waste Type	First Fiscal Year Generated	Last Fiscal Year Generated
55-PF4	4	MLLW	1999	1999
55-PF4	4	MLLW	1998	1998
55-PF4	4	MLLW	1997	2008
55-PF4	4	MLLW	1997	2001
55-PF4	4	MLLW	1998	1998
55-PF4	4	MLLW	2000	2000
55-PF4	4	MLLW	1991	1999
55-PF4	4	MLLW	1995	2002
55-PF4	4	MLLW	1999	1999
55-PF4	4	MLLW	1995	2001
55-PF4	400-AREA	MLLW	1986	2013
55-PF4	400-AREA	MLLW	1980	1981
55-PF4	500-AREA	MLLW	1991	1994
55-PF4	BASEMENT	MLLW	1987	2005
55-PF4	GEN-AREAS	MLLW	2008	2008
55-PF4	GEN-AREAS	MLLW	1985	2007
55-PF4	GEN-AREAS	MLLW	1988	2002
58	29	MLLW	1993	1993
59	1	MLLW	1986	2010
59	1	MLLW	1999	2003
59	1	MLLW	1993	1993
59	1	MLLW	2003	2003
59	1	MLLW	1991	1991
59	1	MLLW	2000	2000
59	1	MLLW	2005	2011
59	1	MLLW	1994	2005
59	1	MLLW	1991	1997
59	1	MLLW	1994	1994
59	1	MLLW	1989	1989
59	1	MLLW	1997	1997
59	1	MLLW	1998	2001
59	1	MLLW	2001	2002

Response to the NMED information request concerning a list of all LANL locations where hazardous waste, mixed waste, and non-hazardous TRU or low level radioactive waste is generated. This list includes sites recorded in WCATS generating waste as of 01-OCT-1979 through the date the query was run (26-JUN-2014.) The information is broken down into columns as follows:
TA = Technical Area
BLDG = Building within the Technical Area
Waste Type = Haz (ardous), MLLW (Mixed Low Level Waste), TRU (Transuranic) and MTRU (Mixed Transuranic.)
First Fiscal Year Generated = Earliest Fiscal Year Generated
Last Fiscal Year Generated = Latest Fiscal Year Generated

TA	BLDG	Waste Type	First Fiscal Year Generated	Last Fiscal Year Generated
59	1	MLLW	2001	2001
59	1	MLLW	2001	2002
59	1	MLLW	2001	2001
59	190	MLLW	1995	1995
59	20	MLLW	1995	1995
59	GEN-AREAS	MLLW	1989	1989
59	GEN-AREAS	MLLW	1987	1990
59	GEN-AREAS	MLLW	2007	2007
59	OH-1	MLLW	1995	1995
59	OH1	MLLW	1995	1996
60	1	MLLW	1995	1995
60	85	MLLW	2004	2005
64	20	MLLW	1994	1995
64	30	MLLW	2007	2007
64	64	MLLW	2007	2011
64	GEN-AREAS	MLLW	1993	2011
73	GEN-AREAS	MLLW	2007	2007
03	30	MTRU	2014	2014
03	78	MTRU	2013	2013
03-CMR	29	MTRU	1993	1993
03-CMR	29	MTRU	2001	2001
03-CMR	29	MTRU	1998	2002
03-CMR	29	MTRU	1995	1998
03-CMR	29	MTRU	1991	1994
03-CMR	29	MTRU	1999	2001
03-CMR	29	MTRU	1999	2000
03-CMR	29	MTRU	1994	1994
03-CMR	29	MTRU	1998	2003
03-CMR	29	MTRU	2002	2013
03-CMR	29	MTRU	1995	1996
03-CMR	29	MTRU	1991	2011
03-CMR	29	MTRU	2002	2003

Response to the NMED information request concerning a list of all LANL locations where hazardous waste, mixed waste, and non-hazardous TRU or low level radioactive waste is generated. This list includes sites recorded in WCATS generating waste as of 01-OCT-1979 through the date the query was run (26-JUN-2014.) The information is broken down into columns as follows:
TA = Technical Area
BLDG = Building within the Technical Area
Waste Type = Haz (ardous), MLLW (Mixed Low Level Waste), TRU (Transuranic) and MTRU (Mixed Transuranic.)
First Fiscal Year Generated = Earliest Fiscal Year Generated
Last Fiscal Year Generated = Latest Fiscal Year Generated

TA	BLDG	Waste Type	First Fiscal Year Generated	Last Fiscal Year Generated
03-CMR	29	MTRU	1997	1997
03-CMR	29	MTRU	1998	1999
03-CMR	29	MTRU	1995	1995
03-CMR	29	MTRU	1991	1991
03-CMR	29	MTRU	2003	2003
03-CMR	29	MTRU	1998	2001
03-CMR	29	MTRU	2002	2011
03-CMR	29	MTRU	1991	2011
03-CMR	29	MTRU	2002	2002
03-CMR	29	MTRU	1998	2013
03-CMR	29	MTRU	1998	2014
03-CMR	29	MTRU	2002	2012
03-CMR	29	MTRU	1999	2003
03-CMR	2967	MTRU	1995	1995
03-CMR	4	MTRU	1999	1999
03-CMR	4	MTRU	2002	2002
03-CMR	4	MTRU	1998	2006
03-CMR	4	MTRU	1998	1998
03-CMR	4	MTRU	1998	1998
03-CMR	4	MTRU	1990	1991
03-CMR	69	MTRU	1998	1998
03-CMR	GEN-AREAS	MTRU	1980	2011
03-CMR	WING2	MTRU	1981	1988
03-CMR	WING3	MTRU	1980	1980
03-CMR	WING5	MTRU	1980	2013
03-CMR	WING7	MTRU	1980	2010
03-CMR	WINGA	MTRU	1981	1981
03-CMR	[NS]	MTRU	1980	1991
21	146	MTRU	1996	1996
21	150	MTRU	1980	1980
21	257	MTRU	1985	1985
21	286	MTRU	1989	1989

Response to the NMED information request concerning a list of all LANL locations where hazardous waste, mixed waste, and non-hazardous TRU or low level radioactive waste is generated. This list includes sites recorded in WCATS generating waste as of 01-OCT-1979 through the date the query was run (26-JUN-2014.) The information is broken down into columns as follows:
TA = Technical Area
BLDG = Building within the Technical Area
Waste Type = Haz (ardous), MLLW (Mixed Low Level Waste), TRU (Transuranic) and MTRU (Mixed Transuranic.)
First Fiscal Year Generated = Earliest Fiscal Year Generated
Last Fiscal Year Generated = Latest Fiscal Year Generated

TA	BLDG	Waste Type	First Fiscal Year Generated	Last Fiscal Year Generated
21	5	MTRU	1980	1980
21	GEN-AREAS	MTRU	1980	1996
35	2	MTRU	1980	1988
39	GEN-AREAS	MTRU	1983	1987
48	1	MTRU	2002	2002
49	147	MTRU	1998	1998
50	1	MTRU	1980	1993
50	1	MTRU	1998	2000
50	1	MTRU	1993	1994
50	1	MTRU	2010	2010
50	1	MTRU	1997	1997
50	1	MTRU	1992	2004
50	2	MTRU	1984	1984
50	201	MTRU	2003	2003
50	69	MTRU	1980	2012
50	69	MTRU	1980	2014
50	GEN-AREAS	MTRU	1980	1985
51	GEN-AREAS	MTRU	1983	1983
53	GEN-AREAS	MTRU	1980	1980
54	153	MTRU	2014	2014
54	230	MTRU	2014	2014
54	231	MTRU	2000	2014
54	375	MTRU	2014	2014
54	412	MTRU	2003	2003
54	412	MTRU	2010	2011
54	49	MTRU	1991	2014
54	GEN-AREAS	MTRU	1988	1988
55	1	MTRU	2010	2010
55	4	MTRU	2013	2013
55	GEN-AREAS	MTRU	1982	1982
55-PF4	1	MTRU	1996	1996
55-PF4	100-AREA	MTRU	1982	2014

Response to the NMED information request concerning a list of all LANL locations where hazardous waste, mixed waste, and non-hazardous TRU or low level radioactive waste is generated. This list includes sites recorded in WCATS generating waste as of 01-OCT-1979 through the date the query was run (26-JUN-2014.) The information is broken down into columns as follows:
TA = Technical Area
BLDG = Building within the Technical Area
Waste Type = Haz (ardous), MLLW (Mixed Low Level Waste), TRU (Transuranic) and MTRU (Mixed Transuranic.)
First Fiscal Year Generated = Earliest Fiscal Year Generated
Last Fiscal Year Generated = Latest Fiscal Year Generated

TA	BLDG	Waste Type	First Fiscal Year Generated	Last Fiscal Year Generated
55-PF4	114	MTRU	1993	1993
55-PF4	114	MTRU	1988	1994
55-PF4	146	MTRU	1998	1998
55-PF4	2	MTRU	1991	1994
55-PF4	200-AREA	MTRU	2009	2014
55-PF4	29	MTRU	2003	2003
55-PF4	29	MTRU	2003	2003
55-PF4	29	MTRU	1989	1991
55-PF4	29	MTRU	1998	1998
55-PF4	29	MTRU	1995	1997
55-PF4	29	MTRU	1994	1997
55-PF4	29	MTRU	1997	1997
55-PF4	29	MTRU	1997	1998
55-PF4	29	MTRU	1996	1997
55-PF4	29	MTRU	2002	2002
55-PF4	300-AREA	MTRU	1980	2014
55-PF4	4	MTRU	2006	2009
55-PF4	4	MTRU	1996	2014
55-PF4	4	MTRU	2003	2003
55-PF4	4	MTRU	1996	1996
55-PF4	4	MTRU	1998	2002
55-PF4	4	MTRU	1995	2014
55-PF4	4	MTRU	2005	2005
55-PF4	4	MTRU	1998	1999
55-PF4	4	MTRU	1996	2013
55-PF4	4	MTRU	1995	1995
55-PF4	4	MTRU	1995	2006
55-PF4	4	MTRU	1999	1999
55-PF4	4	MTRU	1999	1999
55-PF4	4	MTRU	1995	2014
55-PF4	4	MTRU	1993	1997
55-PF4	4	MTRU	1994	1994

Response to the NMED information request concerning a list of all LANL locations where hazardous waste, mixed waste, and non-hazardous TRU or low level radioactive waste is generated. This list includes sites recorded in WCATS generating waste as of 01-OCT-1979 through the date the query was run (26-JUN-2014.) The information is broken down into columns as follows:
TA = Technical Area
BLDG = Building within the Technical Area
Waste Type = Haz (ardous), MLLW (Mixed Low Level Waste), TRU (Transuranic) and MTRU (Mixed Transuranic.)
First Fiscal Year Generated = Earliest Fiscal Year Generated
Last Fiscal Year Generated = Latest Fiscal Year Generated

TA	BLDG	Waste Type	First Fiscal Year Generated	Last Fiscal Year Generated
55-PF4	4	MTRU	1993	1993
55-PF4	4	MTRU	1998	2006
55-PF4	4	MTRU	1980	2014
55-PF4	4	MTRU	1998	2002
55-PF4	4	MTRU	1999	1999
55-PF4	4	MTRU	1991	2002
55-PF4	4	MTRU	1997	2014
55-PF4	4	MTRU	1988	2011
55-PF4	4	MTRU	1996	2012
55-PF4	4	MTRU	2002	2014
55-PF4	400-AREA	MTRU	1980	2014
55-PF4	5	MTRU	2003	2003
55-PF4	500-AREA	MTRU	1989	1990
55-PF4	69	MTRU	1983	2006
55-PF4	BASEMENT	MTRU	1985	2012
55-PF4	GEN-AREAS	MTRU	1991	1991
55-PF4	GEN-AREAS	MTRU	1980	2011
00	GEN-AREAS	TRU	2013	2013
03	130	TRU	1993	1993
03	29	TRU	2007	2007
03	30	TRU	2013	2014
03	30	TRU	2014	2014
03	39	TRU	1980	1980
03	40	TRU	1993	1993
03	40	TRU	1993	1993
03	65	TRU	1983	1983
03	GEN-AREAS	TRU	1980	1981
03-CMR	29	TRU	2002	2002
03-CMR	29	TRU	1995	1995
03-CMR	29	TRU	1989	1997
03-CMR	29	TRU	1994	1994
03-CMR	29	TRU	1993	1994

Response to the NMED information request concerning a list of all LANL locations where hazardous waste, mixed waste, and non-hazardous TRU or low level radioactive waste is generated. This list includes sites recorded in WCATS generating waste as of 01-OCT-1979 through the date the query was run (26-JUN-2014.) The information is broken down into columns as follows:
TA = Technical Area
BLDG = Building within the Technical Area
Waste Type = Haz (ardous), MLLW (Mixed Low Level Waste), TRU (Transuranic) and MTRU (Mixed Transuranic.)
First Fiscal Year Generated = Earliest Fiscal Year Generated
Last Fiscal Year Generated = Latest Fiscal Year Generated

TA	BLDG	Waste Type	First Fiscal Year Generated	Last Fiscal Year Generated
03-CMR	29	TRU	2010	2010
03-CMR	29	TRU	1996	2014
03-CMR	29	TRU	1998	1998
03-CMR	29	TRU	1996	1996
03-CMR	29	TRU	2001	2001
03-CMR	29	TRU	2000	2001
03-CMR	29	TRU	1991	1992
03-CMR	29	TRU	1993	1993
03-CMR	29	TRU	1998	2012
03-CMR	29	TRU	1998	2009
03-CMR	29	TRU	2000	2012
03-CMR	29	TRU	1998	2010
03-CMR	29	TRU	1998	2012
03-CMR	29	TRU	2002	2012
03-CMR	29	TRU	1997	2008
03-CMR	4	TRU	1995	1995
03-CMR	4	TRU	1999	2000
03-CMR	4	TRU	1998	1998
03-CMR	4	TRU	1998	1999
03-CMR	4	TRU	1996	2006
03-CMR	4	TRU	1991	1991
03-CMR	69	TRU	1994	1998
03-CMR	GEN-AREAS	TRU	1980	2010
03-CMR	WING2	TRU	1980	2012
03-CMR	WING3	TRU	1981	2012
03-CMR	WING5	TRU	1981	2014
03-CMR	WING7	TRU	1980	2014
03-CMR	WING9	TRU	1981	1988
03-CMR	[NS]	TRU	1980	1993
21	257	TRU	2010	2010
21	286	TRU	1984	1984
21	5	TRU	1980	1981

Response to the NMED information request concerning a list of all LANL locations where hazardous waste, mixed waste, and non-hazardous TRU or low level radioactive waste is generated. This list includes sites recorded in WCATS generating waste as of 01-OCT-1979 through the date the query was run (26-JUN-2014.) The information is broken down into columns as follows:
TA = Technical Area
BLDG = Building within the Technical Area
Waste Type = Haz (ardous), MLLW (Mixed Low Level Waste), TRU (Transuranic) and MTRU (Mixed Transuranic.)
First Fiscal Year Generated = Earliest Fiscal Year Generated
Last Fiscal Year Generated = Latest Fiscal Year Generated

TA	BLDG	Waste Type	First Fiscal Year Generated	Last Fiscal Year Generated
21	GEN-AREAS	TRU	2011	2011
21	GEN-AREAS	TRU	1980	1997
39	GEN-AREAS	TRU	1983	1988
48	1	TRU	1986	1986
48	1	TRU	1998	1998
48	1	TRU	2002	2002
48	1	TRU	2003	2004
48	1	TRU	2002	2002
48	1	TRU	2003	2004
48	38	TRU	2002	2002
50	1	TRU	1980	1992
50	1	TRU	1999	2000
50	1	TRU	2001	2001
50	1	TRU	1991	2010
50	1	TRU	2011	2011
50	195	TRU	1999	2000
50	283	TRU	2007	2007
50	37	TRU	1980	1980
50	4	TRU	1995	2000
50	4	TRU	1990	2000
50	69	TRU	2014	2014
50	69	TRU	1982	2014
50	69	TRU	1992	1996
50	69	TRU	1993	1993
50	69	TRU	1980	2014
50	69	TRU	1992	1992
50	GEN-AREAS	TRU	1982	1982
54	134	TRU	1991	1991
54	230	TRU	2014	2014
54	231	TRU	2003	2007
54	375	TRU	2010	2010
54	412	TRU	2003	2003

Response to the NMED information request concerning a list of all LANL locations where hazardous waste, mixed waste, and non-hazardous TRU or low level radioactive waste is generated. This list includes sites recorded in WCATS generating waste as of 01-OCT-1979 through the date the query was run (26-JUN-2014.) The information is broken down into columns as follows:
TA = Technical Area
BLDG = Building within the Technical Area
Waste Type = Haz (ardous), MLLW (Mixed Low Level Waste), TRU (Transuranic) and MTRU (Mixed Transuranic.)
First Fiscal Year Generated = Earliest Fiscal Year Generated
Last Fiscal Year Generated = Latest Fiscal Year Generated

TA	BLDG	Waste Type	First Fiscal Year Generated	Last Fiscal Year Generated
54	412	TRU	2012	2012
54	49	TRU	2013	2014
54	GEN-AREAS	TRU	1991	1991
55	2	TRU	1980	1980
55	4	TRU	1993	1993
55	4	TRU	2014	2014
55	GEN-AREAS	TRU	1980	1985
55-PF4	100-AREA	TRU	2011	2013
55-PF4	2	TRU	1994	1994
55-PF4	200-AREA	TRU	1980	2013
55-PF4	29	TRU	2006	2006
55-PF4	29	TRU	1998	2003
55-PF4	29	TRU	2001	2001
55-PF4	29	TRU	2002	2002
55-PF4	29	TRU	1996	1996
55-PF4	300-AREA	TRU	1980	1985
55-PF4	4	TRU	1997	2008
55-PF4	4	TRU	1996	2014
55-PF4	4	TRU	1996	1996
55-PF4	4	TRU	1996	1996
55-PF4	4	TRU	1995	2014
55-PF4	4	TRU	1996	2014
55-PF4	4	TRU	1996	1998
55-PF4	4	TRU	1994	1994
55-PF4	4	TRU	2002	2002
55-PF4	4	TRU	1995	2013
55-PF4	4	TRU	1994	2013
55-PF4	4	TRU	1993	1994
55-PF4	4	TRU	1993	1994
55-PF4	4	TRU	1998	1999
55-PF4	4	TRU	1996	2002
55-PF4	4	TRU	1988	2014

Response to the NMED information request concerning a list of all LANL locations where hazardous waste, mixed waste, and non-hazardous TRU or low level radioactive waste is generated. This list includes sites recorded in WCATS generating waste as of 01-OCT-1979 through the date the query was run (26-JUN-2014.) The information is broken down into columns as follows:
TA = Technical Area
BLDG = Building within the Technical Area
Waste Type = Haz (ardous), MLLW (Mixed Low Level Waste), TRU (Transuranic) and MTRU (Mixed Transuranic.)
First Fiscal Year Generated = Earliest Fiscal Year Generated
Last Fiscal Year Generated = Latest Fiscal Year Generated

TA	BLDG	Waste Type	First Fiscal Year Generated	Last Fiscal Year Generated
55-PF4	4	TRU	1999	1999
55-PF4	4	TRU	1996	2010
55-PF4	4	TRU	1999	1999
55-PF4	4	TRU	2000	2001
55-PF4	4	TRU	1997	2014
55-PF4	4	TRU	1987	2013
55-PF4	4	TRU	1996	2014
55-PF4	4	TRU	2009	2009
55-PF4	400-AREA	TRU	1980	2012
55-PF4	400-AREA	TRU	2003	2003
55-PF4	500-AREA	TRU	1988	1991
55-PF4	69	TRU	1984	2005
55-PF4	BASEMENT	TRU	1982	1987
55-PF4	GEN-AREAS	TRU	1980	1995
55-PF4	PF4	TRU	1992	1993

ENCLOSURE 3

List of Current LANL and Central Characterization Project (CCP) Standard Operations Procedures Related to the Generation and Management of Waste At LANL Locations

WM-DO-14-048

LA-UR-14-24906

Date: JUL 03 2014

LANL Waste Policy Documents
P409, Waste Management, Rev 4
P930-1, LANL Waste Acceptance Criteria, Rev 3
P930-2, Radioactive Waste Certification Program, Rev 4
P930-3, Off-Site Shipment of Chemical, Hazardous, or Radioactive Waste, Rev 0

Area G Waste Procedures
EP-AREAG-WO-DOP-0202, Overpack Free Liquid Removal, TA-54 Area G
EP-AREAG-WO-DOP-1015, TA-54 Area G Pipe Overpack Container Operations
EP-AREAG-WO-DOP-1069, TA-54 Area G TRU SWB/Drum Operations
EP-AREAG-WO-DOP-1084, TA-54 Area G TRU Waste Drum SSSR Activities
EP-AREAG-WO-DOP-1085, TA-54 Area G Sludge Remediation SSSR Activities
EP-AREAG-WO-DOP-1091, TA-54 Area G TRU Oversized Container SSSR Activities
EP-AREAG-WO-DOP-1155, TA-54 Area G TRU Corrugated Metal Box SSSR Activities
EP-AREAG-WO-DOP-1159, TA-54 Area G Ten-Drum Overpack Container Operations
EP-AREAG-WO-DOP-1161, TA-54 Area G TRU Waste Glovebag Operations
EP-AREAG-WO-DOP-1238, TA-54 Area G TRU Nitrate Salt Drum Sampling
EP-AREAG-WO-DOP-1245, TA-54 Area G Empty Nitrate Salt Parent Drum Sampling
EP-DOP-2215, TA-54 Area G Waste Staging, Loading, and Off-Site Shipment

Waste Characterization, Repackaging Facility (WCRRF) Procedures
EP-WCRR-WO-DOP-1103, WCRRF LLW Handling, Processing, Storage, And Shipment
EP-WCRR-WO-DOP-1196, WCG HORIZONTAL PORT WASTE REMOVAL
EP-WCRR-WO-DOP-1197, WCRRF Loading/Unloading SWB or Overpack Drum
EP-WCRR-WO-DOP-1198, WCRRF Waste Characterization Glovebox Operations
EP-WCRR-WO-DOP-1200, WCRRF SWB Preparation And Closure
EP-WCRR-WO-DOP-1204, WCRRF 55-Gallon Daughter Drum Assembly Preparation and Closure

Central Characterization Project (CCP) Procedures
CCP-PO-001, CCP Transuranic Waste Characterization Quality Assurance Project Plan
CCP-PO-002, CCP Transuranic Waste Certification Plan
CCP-PO-003, CCP Transuranic Authorized Methods for Payload Control (CCP CH-TRAMPAC)
CCP-PO-012, CCP/Los Alamos National Laboratory (LANL) Interface Document
CCP-PO-016, CCP Gas Generation Testing Quality Assurance Project Plan
CCP-QP-005, CCP TRU Nonconforming Item Reporting and Control
CCP-TP-001, CCP Project Level Data Validation and Verification
CCP-TP-002, CCP Reconciliation of DQOs and Reporting Characterization Data
CCP-TP-005, CCP Acceptable Knowledge Documentation
CCP-TP-030, CCP CH TRU Waste Certification and WWIS/WDS Data Entry
CCP-TP-053, CCP Standard Real-Time Radiography (RTR) Inspection Procedure
CCP-TP-066, CCP Radiography Screening Procedure for Prohibited Items
CCP-TP-069, CCP Sealed Source Visual Examination and Packaging
CCP-TP-083, CCP Gas Generation Testing
CCP-TP-101, CCP Off-Site Source Recovery Project Sealed Source Radiological Characterization

CCP-TP-103, CCP Data Reviewing, Validating, and Reporting Procedure for the NDA Counters at LANL Using NDA 2000
CCP-TP-113, CCP Standard Contact-Handled Waste Visual Examination
CCP-TP-120, CCP Container Management
DOE/WIPP 06-3345, Waste Isolation Pilot Plant Flammable Gas Analysis

TA-55 and TA-50 RLWTF Procedures
FFS-DOP-002, Low Level Waste Operations at TA-55, R8.1
FFS-DOP-014, Low Level Chemical, Mixed, Hazardous, and Non-Hazardous Waste Operations at TA-55 and RLUOB, R4-IPC1
PA-DOP-01462, Packing TRU Waste into Pipe Overpack Containers, R1
PA-DOP-01401, Visual Inspection of TRU Waste, R0
PA-DOP-01456, Packing TRU Waste into Approved Containers, R1
PA-DOP-01450, Packing Oversized TRU Waste into Approved Containers, R1
PMT4-DOP-087, Solidification of Liquid TRU/Aqueous/Organic Waste and Liquid Waste Mixtures (U), R2
PMT2-DOP-CF-008, Particulate Waste Certification and Cementation, R4
RLW-DOP-010, Drum Tumbler Operations, R9
PMT2-DOP-CF-001, R1 Preparing Drum Assemblies for Cement Fixation (LA-UR-14-24679)
PMT2-DOP-CF-002, R3 Drum-in/Drum-out Operations for Cement (LA-UR-14-24704)
PMT2-DOP-CF-003, R1 Certifying, Transferring and Storing Evaporator Bottoms for Cement Fixation (LA-UR-14-24634)
PMT2-DOP-CF-005, R1 Non-evaporator Solution Operations for Cement Fixation (LA-UR-14-24711)
PMT2-DOP-CF-006, R1 pH Adjustment of Evaporator Bottoms for Cement Fixation (LA-UR-14-24713)
PMT2-DOP-CF-007, R3 Cement Addition Operations for Cement Fixation (LA-UR-14-24625)
PMT2-DOP-CF-008, R4 Particulate Waste Certification and Cementation (LA-UR-14-24636)
PMT2-DOP-CF-009, R3 Inspection of Treatment, Storage, and Disposal Units for Cement Fixation and Tank Storage (LA-UR-14-24635)

Waste Management Division Procedures
ADMIN-105: Waste Help: Customer Support and Work Initiation
Authorized Release Limits (ARL) Team Checklist
ENV-RCRA-QP-030: RCRA Sampling and Analysis
ENV-RCRA-SAMPLING-QAPP: ENV-RCRA Sampling & Analysis Plan
P409 Waste Tools
TL-002: Waste Generator Guidance for Completing the TRU Waste Storage Record (TWSR)
TRU Waste Storage Record Form 1971
WGS-QP-226: Waste Certification Program Radioactive Waste Management Surveillance Assessments
WGS-QP-227: Waste Certification Program Deployed Waste Certification
WGS-QP-235: Waste Certification Program Waste Management Performance Assurance
WGS-QP-236: Waste Certification Program Waste Verification
WM-PROG-QP-012: Acceptable Knowledge Review Procedure

WM-PROG-QP-203: Reviewing Waste Profile Forms
WM-PROG-QP-205: TA-54, Area G PCB Compliance Monitoring
WM-PROG-QP-250: Radioactive Waste Facility Certification
WM-SVS-DOP-300: Preparing and Shipping Waste Off-Site
WM-SVS-DOP-303: On-Site Waste Management
WM-SVS-QP-300: Certification of Industrial Packaging in accordance with Department of Transportation Regulations
WM-WGS-SO-001: Interim Guidance on Timely Notification to Generators and the LANL NNSS WCO
WTS-QP-228: User Manual for the Transuranic Waste Container Transfer (TRUCT) System
WTS-QP-233: Data Change Procedure for Waste Management Database Applications

Procedures for Shipping to the Nevada National Security Site (NNSS)

ENV-GUIDE-1002: LANL Off-Site Nevada National Security Site (NNSS) Implementation Crosswalk (NIC) Guide
NNSS NIC Crosswalk
WM-PROG-DOP-200: Technical Area 54 Receipt, Storage, and Shipment of Low-Level Waste to Nevada National Security Site
Nevada National Security Site Waste Acceptance Criteria
WM-PROG-PLN-100: Consolidated Software Plan for the Low Level Waste Information System for Generators (LLWIS-G)
WM-PROG-QAP-200: Los Alamos National Laboratory Waste Certification Quality Assurance Plan (QAP)
WM-PROG-QP-202: Preparing Nevada National Security Site Package Shipment and Disposal Requests
WM-PROG-QP-203: Preparing Nevada National Security Site Waste Profiles
WM-PROG-QP-204: Low-Level Waste Packaging Oversight of Waste for Disposal at the Nevada National Security Site (NNSS)
WM-PROG-QP-205: Transportation of Waste for Disposal at the Nevada National Security Site
WM-PROG-QP-206: Characterization of Waste for Disposal at the Nevada National Security Site
WM-PROG-QP-207: LANL Off-Site Waste Certification and Administrative Processes
WM-PROG-QP-208: Mixed Low Level Waste Packaging Oversight of Waste for Disposal at the Nevada National Security Site (NNSS)
WM-WGS-SO-001: Interim Guidance on Timely Notification to Generators and the LANL NNSS WCO

Miscellaneous Waste Procedures

EP-DIV-PLAN-20079, EWMO ADEP-Corrective Actions Program (CAP) Facility Waste Certification Plan (FWCP), R0.1
EP-DIR-SOP-10021, Characterization and Management of Environmental Programs Waste, R0
IWD-RP2-RIC-26, Routine Operations Performed by RP-2 Radiation Instrument Pool (Standing IWD), Rev. 6
JHA ID: 0009582, STO Waste Management Coordinator Routine Operations
STO-OP-043, STO Generator Waste Operations, R0
WETF-WST-TP-01, Tritium Contaminated Waste Oil Disposal Operating Instruction, Rev. A
W-7-TP-0053U, Absorption of Liquid Waste with Low-Level Tritium, Rev A