LA-UR-18-30649
Approved for public release; distribution is unlimited.

Title: N-k Failure Analysis Algorithm for Identification of Extreme Events for Cascading Outage Pre-screening process

Author(s): Sundar, Kaarthik
Vallem, Mallikarjuna
Bent, Russell Whitford
Samaan, Nader
Vyakaranam, Bharat
Makarov, Yury

Intended for: PES general meeting, 2019-08-04 (Atlanta, Georgia, United States)

Issued: 2021-03-16 (rev.1)

Disclaimer:
Los Alamos National Laboratory, an affirmative action/equal opportunity employer, is operated by Triad National Security, LLC for the National Nuclear Security Administration of U.S. Department of Energy under contract 89233218CNA000001. By approving this article, the publisher recognizes that the U.S. Government retains nonexclusive, royalty-free license to publish or reproduce the published form of this contribution, or to allow others to do so, for U.S. Government purposes. Los Alamos National Laboratory requests that the publisher identify this article as work performed under the auspices of the U.S. Department of Energy. Los Alamos National Laboratory strongly supports academic freedom and a researcher's right to publish; as an institution, however, the Laboratory does not endorse the viewpoint of a publication or guarantee its technical correctness.

N-k Failure Analysis Algorithm for Identification of Extreme Events for Cascading Outage Pre-screening process

Kaarthik Sundar[1], Mallikarjuna Vallem[2], Russell Bent[1], Nader Samaan[2], Bharat Vyakaranam[2], Yury Makarov[2]

***Abstract*— The electric power grid is prone to severe contingencies which degrade the reliability, resilience and security of the power system. Current practices assess the risk posed by contingencies though steady-state methods like N-1, N-2 and N-1-1 analyses. While these methods have been tested and used for decades, the increasing frequency of blackouts and major out- ages demonstrate that these methods do not fully capture the contingency size and consequences such as load loss. In other words, many contingencies exhibit phenomena, such as cascading failures, that go beyond conventional steady-state models. Unfortunately, the computational requirements of full contingency assessment with detailed models remains out of reach for the modern grid operators. To address this challenge, this paper explores the suitability of using steady-state, N-k analysis to identify a smaller set of contingencies that require detailed cascading analysis, including protection system operation and dynamic simulation. The method is demonstrated on the IEEE 300-bus test system for N-1 and N-2 contingencies and a detailed analysis is provided to determine situations where N-k analysis correctly (or incorrectly) identifies the contingencies that require further analysis. The reasons for discrepancies of results of conventional steady state and advanced analyses has been identified.**

I. Introduction

In recent years, there has been rising concerns about the threats posed by extreme events to electric power grids and the associated socio-economic systems that depend on reliable delivery of power supply. The causes of these events have a large spectrum, including natural sources, such as severe weather impacts (i.e., Hurricane Florence and Superstorm Sandy), earthquakes and man-made sources such as accidental damage (i.e., the 2003 U.S. Northeast blackout) and deliberate attacks. Irrespective of cause, these events are largely characterized by damage or degradation to power system components (severe contingencies) that lead to an inability to provide power. Despite the potential economic costs and social hardships of such events, it remains difficult to adequately plan, mitigate and prepare for such events. One of the primary bottlenecks for progress is modeling and identifying the extreme event induced contingencies that have significant impact. Within the literature, a number of approaches have emerged that begin to address this challenge, including models for N-k contingency analysis and simulations of cascading phenomena. While both of these approaches have made significant strides in supporting the modeling of extreme event induced severe contingencies, gaps still remain. This paper considers these gaps by looking at the intersection of these two approaches and developing a method for combining the strengths of dynamic cascade and protection system modeling with N-k analysis.

N-k contingency analysis is typically treated as a special case of interdiction modeling. Here, N-k is modeled through attacker-defender models, where the goal of the attacker is to identify the set of k components whose interdiction (failure) creates the worst impact to the the defender. In the context of power systems, the attacker chooses k lines to fail. The defender is then forced to shed load in response to the failure. There are many variations of this paradigm, including models where the attacker can fail both nodes and edges with budgets [1], [2], models where the defender has more response options (generator dispatch, switching, etc.) [3], and models that include stochastic failure [4]. One of the biggest limitations of contingency analysis based on N-k are steady-state power flow physics assumptions that neglect the potential cascading impacts of N-k failures. Unfortunately, embedding cascading models into N-k results in formulations that are generally computationally difficult to solve, though there are some partial solutions emerging in [5] and [6].

On the other hand, cascading outage has focused on developing high-fidelity, detailed models of component outages that are caused by severe contingencies. As a result, a great deal of recent work has focused on developing approaches, like the Dynamic Contingency Analysis Tool (DCAT), to improve the realism of cascading simulations [7]. These tools include features like protection system models, dynamic behavior of generator systems, corrective actions, and others that has pushed simulation accuracy to impressive levels. However, one of the biggest challenges associated with using detailed simulations of cascades in severe contingency analysis are the significant computation time requirements.

Computationally efficient methods for identifying severe contingencies that capture cascading behavior remain elusive. In principle, the mathematical model of cascades could be inserted into the models used to compute N-k, however, such models are generally computationally intractable. Similarly, complete enumeration of all cascades induced by severe contingencies is also intractable. To bridge this gap, we develop a method where steady-state N-k analysis is used to identify sets of severe contingencies that require detailed cascading analysis through tools like DCAT. The goal is an approach that allows a grid operator to ignore the large number of contingencies that do not lead to high impact cascades and only perform detailed analysis for the handful of contingencies that induce large scale cascades. Of particular interest is the identification of N-2 contingencies that

[1]Los Alamos National Laboratory {rbent,kaarthik}@lanl.gov
[2]Pacific Northwest National Laboratory {Yuri.Makarov, Nader.Samaan, Mallikarjuna.Vallem, bharatgnvsr.vyakaranam}@pnnl.gov

978-1-7281-1981-6/19/$31.00 ©2019 IEEE

Authorized licensed use limited to: LANL Research Library. Downloaded on March 15,2021 at 16:31:12 UTC from IEEE Xplore. Restrictions apply.

are currently under analyzed due to a lack of common-mode causes. Finally, we discuss features that prevent *N-k* analysis from identifying high impact cascades.

II. N-k Modeling

This section presents a brief overview of the *N-k* failure-identification problem and the algorithm used to solve the problem. The problem is defined as follows: we are given an electric transmission system, where, for the purposes of this article, we assume that only transmission lines can fail. The goal of the *N-k* failure-identification problem is to find k components whose simultaneous or near simultaneous failure maximizes the minimum damage to the system. Here, damage is measured in terms of load shed due to the *N-k* failure. The problem is a mixed-integer, bi-level, and nonlinear optimization problem. The problem is analogous to a Stackleberg game where the attacker's problem is the outer maximization problem and the inner problem is the defender's (operator's) problem. The outer problem contains binary interdiction (failure) variables and the inner problem is a minimum load shedding problem subject to a model of operator response to the contingency. In principle, the response model could include a detailed cascade model, but in all practical models, the response is based on steady-state, non-convex AC power flows or an approximations thereof. For ease of exposition, we present the mathematical formulation abstractly as:

$$\max_{s \in N-k \text{ scenarios}} \eta_s$$

where

$\eta_s = \min$ load shed subject to:

system limits and AC power flow constraints.

The details of the model are found in [4]. Even in steady-state, the inner problem is a nonlinear and non-convex problem. To preserve tractability, we use the second-order cone (SOC) relaxation of the AC power flows [8] to convexify the inner problem. We then use the cutting plane algorithm developed in [4] to solve the resulting bi-level mixed-integer convex program. An overview of the algorithm is shown in the flowchart in Fig. 1. To identify a set of severe *N-k* contingencies, we run the algorithm repeatedly and add *no-good* cuts for any contingency that has already been identified.

For each identified contingency, we report the severity in terms of both the load shed calculated under the SOC model and a feasible load shed for the original, non convex AC power flow equations. To obtain an AC feasible solution, we consider the largest connected component in the transmission system after the removal of the k components, as dictated by the *N-k* failure and use the algorithm in [9] to get an AC feasible solution.

III. Cascading Analysis Modeling

In this section, we present a brief overview of the approach (DCAT [7]) that we uses for modeling and simulating cascading outages caused by severe contingencies. DCAT

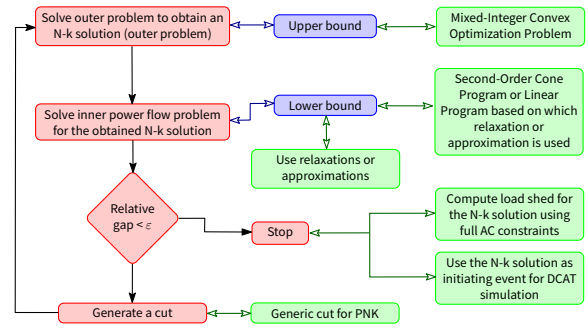

Fig. 1. Flowchart of the algorithm used to perform *N-k* analysis.

implements a hybrid approach of both dynamic and steady-state simulations that allows us to capture events that occur at fast time scales, such as relay action and slower time scale events, such as manual corrective actions, special protection schemes and delayed relay operations. DCAT includes detailed models of components such as simulations of generator response to under and over frequency conditions, simulation of relay response to under and over voltage situations based on NERC Standard PRC- 024-2, simulation of distance relays with zone-1, zone-2, and zone-3 settings; and simulation of under frequency and under voltage load-shedding relays.

The overall DCAT methodology is illustrated in the flowchart shown in Fig. 2. In this figure, DCAT is initiated with the application of a severe contingency like a fault at a major generation substation. The fault is then isolated and the disturbance caused by the fault is modeled with a simulation of the fast transients. This simulation is allowed to converge to a fixed point and the steady-state conditions at this point are then used to calculate the response of the system at slower time scales. The calculation includes a determination of security violations and the corrective actions that are performed in response to the violations, i.e., generation redispatch, shunt and tap switching and load loss. DCAT has two methods for calculating corrective actions, one based on the corrective action model included in the PSSE software system and one based on an AC Optimal Power Flow formulation implemented in GAMS. If the corrective actions cannot resolve the security violations, then DCAT trips the most violated component and restarts the transient simulation. The process continues until all components are operating within limits or the system enters a complete blackout.

IV. Contingency Analysis

This section discusses the current state-of-practice for severe contingency analysis performed by planning and operations engineers. Given detailed knowledge of their system, these engineers identify major contingencies that are likely to push their system into alert or emergency conditions. The contingencies are enumerated categorized as A, B, C and D based on their severity, which causes includes significant frequency drops and could induce zone-3 line tripping, voltage and frequency based generator tripping and load

Authorized licensed use limited to: LANL Research Library. Downloaded on March 15,2021 at 16:31:12 UTC from IEEE Xplore. Restrictions apply.

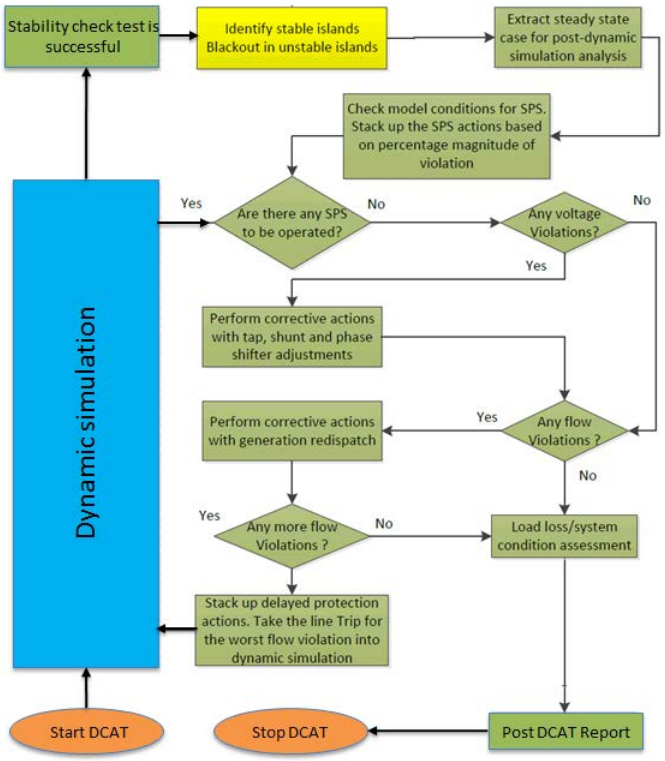

Fig. 2. The hybrid simulation flowchart of the architecture used by DCAT

shedding. Planning engineers identify these extreme events and perform steady state and dynamic analysis to study the impact of such extreme events.

Steady State Contingency Analysis of Severe Events: Steady state N-2 contingency analysis is performed on common-mode failures of major components such as transmission lines, transformers, generators, and transmission substations. The contingencies are defined as N-2 only if there is a common cause for failure. For example, a lightning strike on a substation can lead to two or more outages on lines connected to the substation. In this nomenclature, independent contingencies that do not have a common cause of failure are called N-1-1 contingencies. In the parlance of the N-k severe contingency modeling discussed earlier, the common mode could be large scale natural event like an earthquake or a coordinated malicious attack.

Dynamic Contingency Analysis: As discussed earlier, the dynamic simulation of power systems is a computationally intensive process. As a result, only the most severe N-1, N-2 and N-1-1 contingencies, as pre-identified by a planning or operations engineer, are analyzed this way. The computational requirements are so burdensome, that most utilities perform dynamic simulations without further analyzing cascading events that may arise from the initiating event.

Based on these tools, the prevailing understanding of extreme events suggests that there are a limited number of severe contingencies that could lead to significant outages. Moreover, these contingencies are identifiable by a knowledgeable engineer. Unfortunately, this understanding assumes that planners can foresee the system conditions at the time of contingency or that the contingency set includes the severe contingencies for all possible system conditions. Clearly, this is an unrealistic assumption and it is entirely possible that a new system operating pattern will yield a situation where an assumed not-severe contingency will now yield a severe outcome. However, given current computational limitations, planners are restricted by how much more they can do.

Our approach (and key contribution) augments the A, B, C, and D contingency lists by identifying additional, potentially severe contingencies for the current operating conditions for the system. The approach uses the N-k methodology discussed in Sec. II to identify the worst m contingencies for a given k, For the purposes of this paper, we limit $k \leq 2$ and $m \leq 50$. The identified m contingencies are then screened for further dynamic and cascading analysis. In the next section, we demonstrate that this methodology is able to identify contingencies that result in large outages in a cascading simulation. Secondarily, we also identify situations where steady-state N-k outages are not a good predictor of a cascading outage. These observations are important motivators for future work on improvements to N-k models that will impact cascading analysis.

V. Case Studies

In this section, we test our methodology for using N-k analysis to identify contingencies to screen for cascading analysis on the IEEE 300-bus transmission network. The IEEE-300 bus system has 480 branches including transmission lines and two winding transformers and we consider N-1 and N-2 contingencies on this system [10], [11], [12]. In this model, there are 230, 400 N-2 (N-1-1) contingency possibilities, an unreasonable number of contingencies for a planning engineer to realistically enumerate all possible cascading outcomes. All the cascading analysis is performed using DCAT.

A. N-1 Contingency Analysis

In this case study, we performed an enumeration of all N-1 contingencies using both N-k analysis and DCAT. A comparison of the top 20 contingencies (as identified by N-k) is shown in Fig. 3.

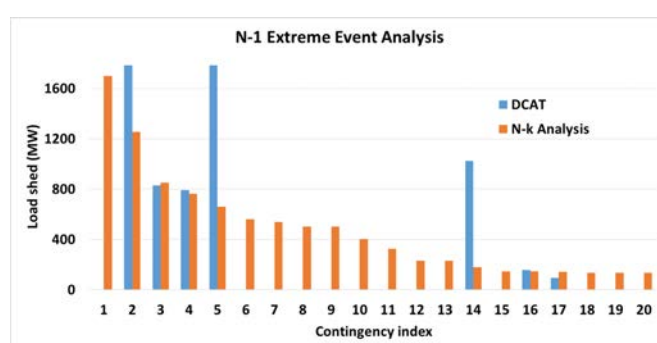

Fig. 3. Results of N-1 extreme events analysis

Authorized licensed use limited to: LANL Research Library. Downloaded on March 15,2021 at 16:31:12 UTC from IEEE Xplore. Restrictions apply.

In this set of results, we observe that the outages computed by DCAT and *N-k* analysis can have significant differences. These differences arise due to the underlying contingency response assumptions of the two methodologies as well as the nature of the contingencies. We discuss the differences using two examples.

Contingency 1: Contingency 1 disconnects the line between buses 224 and 225 (see Fig. 4.) This contingency creates an island which has a total load of 1700 MW. DCAT simulates this contingency as a sustainable island supplied by the generator at bus 10030. However, *N-k* analysis assumes this part of the system as incapable of being operated as an island. A generalization of the *N-k* analysis to support energized islands would eliminate this discrepancy.

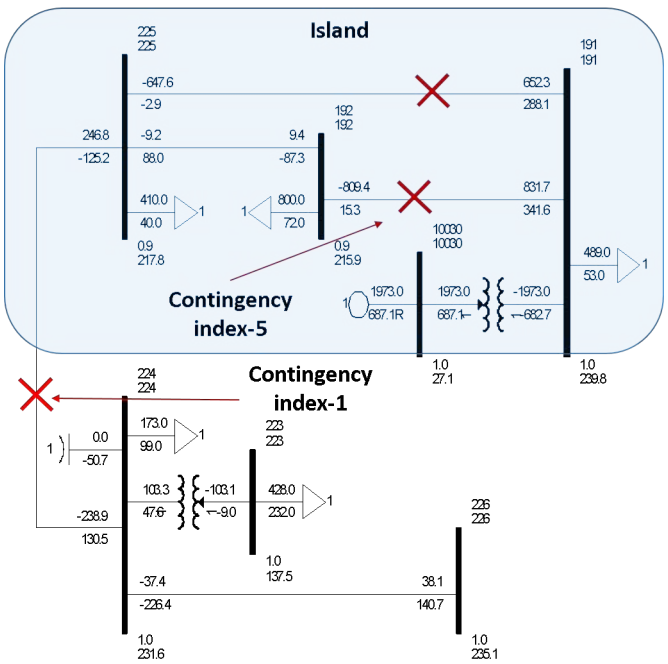

Fig. 4. Illustration of Contingency indices 1 & 5 of N-1 results

Contingency 5: This contingency disconnects the line between buses 191 and 192 (Fig. 4). Here, the DCAT outage is roughly 3 times larger than the *N-k* outage. This is due to a zone-3 line trip on the line connecting buses 191 and 225, and subsequent trips of the generator at bus 10030 and the line connecting buses 224 and 225. Since protection system response is not included in *N-k* analysis, it does not include the cascade induced outages.

It is important to note that despite these differences, when restricting ourselves to the top 20 contingencies, as identified by *N-k*, we are able to identify all cases that yield the worst outages during a cascading analysis. The nature of N-k analysis is to identify weak parts of the system which are prone to disconnection as observed in Contingency-1. Even though the sustainable island could stay for precisely the single contingency, the network is on a tipping point of cascading with an extra contingency which is identified in Contingency-5 using DCAT. Overall, N-k analysis is capable of identifying significantly fewer, but the most severe contingencies rather than enumerating all 480 of the N-1 possibilities.

B. *N*-2 *Contingency Analysis*

In the second set of experiments, we identified the top 50 *N*-2/*N*-1-1 contingencies using the *N-k* failure-identification algorithm. Each of these contingencies were used to initiate cascades in DCAT. The outages (load shed) of both methods are shown in Fig. 5.

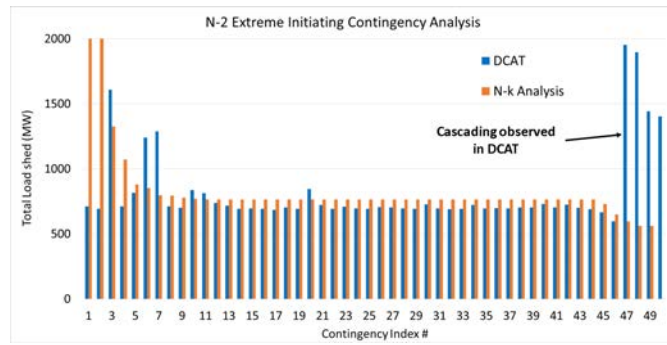

Fig. 5. Results of N-2 extreme events analysis

In contrast to the *N*-1, results, there is considerable agreement between the outages of calculated by *N-k* and DCAT. We conjecture that many of these contingencies are classified as *N*-1-1 and most of the outages are caused directly by the failures and not by cascading failures. The biggest differences occur at contingencies 47, 48, and 49. An illustration of contingency 47 is provided in Fig. 6. In this contingency, the branch connecting buses 7139 and 10062 and buses 125 and 126 are disconnected. The trip of line between 7139 and 10062 disconnects a 700 MW generator at bus 10062. This causes line flows around bus 125 to increase in conjunction with the line between 125 and 126 tripping, As a result, lines from bus 125 to 122 and 123 trip due to zone-3 protection. This leads to a total load loss of 1953 MW. The *N-k* analysis doesn't predict the entire cascading outage and load loss, however, it does estimate 600 MW of load loss, which was significant to analyze such case with a detailed cascading analysis.

It is important to note that while there is agreement between *N-k* and DCAT in some places and disagreement in others, *N-k* does identify severe contingencies that do require cascading analysis and motivates the need for further exploration into this approach.

VI. Methodology Discussion

In this section, we discuss some general observations about our method, its relative merits, and opportunities for future work. First, as seen in the previous section, the outages (load shed) computed by both *N-k* and DCAT (cascade simulation) are rarely identical. This is not unexpected given that both approaches have fundamentally different models of the physics of power flows. In most cases, the substantial differences can be traced to specific aspects of cascading

Authorized licensed use limited to: LANL Research Library. Downloaded on March 15,2021 at 16:31:12 UTC from IEEE Xplore. Restrictions apply.

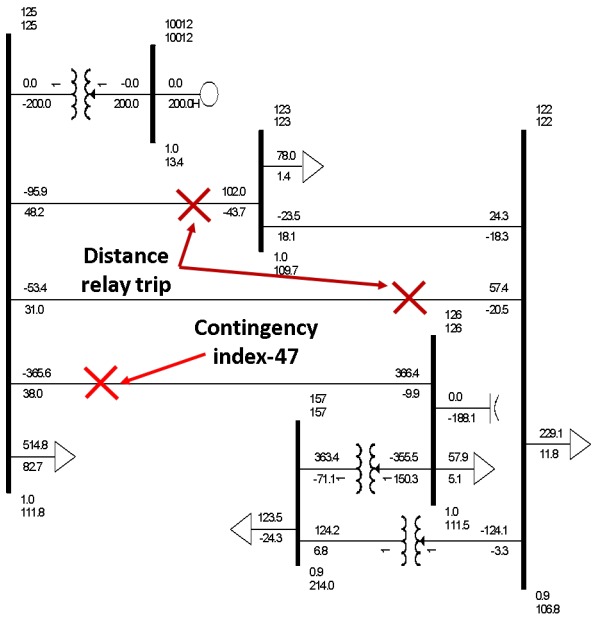

Fig. 6. Illustration of Contingency index 47 of N-2 results

modeling, like zone 3 protection, that are not included in *N-k* models.

Despite the identified differences, the overall methodology is a clear improvement over the state-of-practice. Cascading analysis is often not included in operational planning simply because it is unclear which contingencies might lead to a cascading failure and the computational burden associated with enumerating all cascades is too great. There is a need for methods to screen the contingencies down to a manageable number that are analyzed with a cascading analysis. While our approach is not guaranteed to identify *all* contingencies that result in large outages in a cascading analysis, it does identify *some* thereby demonstrating a path for simulating a small number of cascades and adopting cascading analysis in a operational planning environment. Moreover, the identified causes of substantial differences between *N-k* and cascading analysis are strong drivers of where future work on *N-k* methodology improvements should proceed to improve the performance of the methodology discussed in this paper.

VII. Conclusion

Modern power grids are faced with increased risk from extreme event induced severe contingencies. Existing approaches rely on the expertise of their engineers to identify the contingencies that are used to model the reliability and safety of their systems, While this approach has largely worked to-date, the increase in outages in recent years indicates that there are contingency risks outside those that are traditionally modeled.

In this paper, we develop a method for combining the advanced techniques from *N-k* analysis and cascading analysis to develop a screening methodology for identifying potentially severe contingencies that are not traditionally included in reliability and security studies. This approach uses *N-k* analysis to identify a set of contingencies to further analyze with cascading methods. While not perfect, our results demonstrate that this methodology does provide some initial evidence that such an approach holds promise. Future work here includes taking the outcomes of this paper and using it to guide the development of new approaches for incorporating additional detail to traditional *N-k* models. This includes the development of a formal (tractable) mathematics of some aspects of cascading for *N-k*. There is also future work is extending the combined methodology to contigencies beyond *N*-2. Finally, it will be important to test the approach on bigger models, as well as realistic data sets.

Acknowledgements

This work was supported by funding from the U.S. Department of Energy's (DOE) Office of Electricity Delivery and Energy Reliability and Office of Energy Efficiency & Renewable Energy as part of the Extreme Event Modeling project of the Grid Modernization Laboratory Consortium. The project team thanks Dave Howard, Gil Bindewald, and Ali Ghassemian (DOE) and John Grosh (Lawrence Livermore National Laboratory) for their continuing support, help, and guidance.

References

[1] J. Salmeron, K. Wood, and R. Baldick, "Analysis of Electric Grid Security Under Terrorist Threat," *IEEE Transactions on Power Systems*, vol. 19, no. 2, pp. 905–912, 2004.

[2] ——, "Worst-case interdiction analysis of large-scale electric power grids," *IEEE Transactions on Power Systems*, vol. 24, no. 1, pp. 96–104, 2009.

[3] A. Delgadillo, J. Arroyo, and N. Alguacil, "Analysis of Electric Grid Interdiction with Line Switching," *IEEE Transactions on Power Systems*, vol. 25, no. 2, pp. 633–641, 2010.

[4] K. Sundar, C. Coffrin, H. Nagarajan, and R. Bent, "Probabilistic n-k failure-identification for power systems," *Networks*, vol. 71, no. 3, pp. 302–321, 2018.

[5] D. Bienstock, *Electrical Transmission System Cascades and Vulnerability: An operations Research Viewpoint*. SIAM-Society for Industrial and Applied Mathematics, 2015.

[6] N. Fan, R. Chen, and J. P. Watson, "N-1-1 contingency-constrained optimal power flow by interdiction methods," in *IEEE Power and Energy Society General Meeting*, 2012, pp. 1–6.

[7] "Dynamic contingency analysis tool phase-1," *Pacific Northwest National Laboratory*, 2015.

[8] H. Hijazi, C. Coffrin, and P. van Hentenryck, "Convex Quadratic Relaxations for Mixed-Integer Nonlinear Programs in Power Systems," *Mathematical Programming Computation*, pp. 1–47, 2016.

[9] C. Coffrin, R. Bent, B. Tasseff, K. Sundar, and S. Backhaus, "Relaxations of ac maximal load delivery for severe contingency analysis," *IEEE Transactions on Power Systems*, 2018.

[10] N. A. Samaan, J. E. Dagle, Y. V. Makarov, R. Diao, M. R. Vallem, T. B. Nguyen, L. E. Miller, B. Vyakaranam, F. K. Tuffner, M. Pai *et al.*, "Modeling of protection in dynamic simulation using generic relay models and settings," in *Power and Energy Society General Meeting (PESGM), 2016*. IEEE, 2016, pp. 1–5.

[11] Q. Huang, B. Vyakaranam, R. Diao, Y. Makarov, N. Samaan, M. R. Vallem, and E. Pajuelo, "Modeling zone-3 protection with generic relay models for dynamic contingency analysis," in *Power & Energy Society General Meeting, 2017 IEEE*. IEEE, 2017, pp. 1–5.

[12] B. Vyakaranam, A. Berscheic, M. Vallem, N. Samaan, X. Ke, Y. Makarov, J. Dagle, and R. Diao, "Novel additions to dcat to analyze what-if scenarios of protection maloperation and intermittent resources on cascading failures for extreme events," in *2018 IEEE/PES Transmission and Distribution Conference and Exposition (T&D)*. IEEE, 2018, pp. 1–9.

Authorized licensed use limited to: LANL Research Library. Downloaded on March 15,2021 at 16:31:12 UTC from IEEE Xplore. Restrictions apply.