LA-UR-21-22612
Approved for public release; distribution is unlimited.

Title: Human Factors and Nuclear Criticality Safety Accidents

Author(s): Bowles Tomaszewski, Amanda Sue
Calhoun, Norann Nell

Intended for: NEST Lecture - UNM LA

Issued: 2021-03-17

Disclaimer:
Los Alamos National Laboratory, an affirmative action/equal opportunity employer, is operated by Triad National Security, LLC for the National Nuclear Security Administration of U.S. Department of Energy under contract 89233218CNA000001. By approving this article, the publisher recognizes that the U.S. Government retains nonexclusive, royalty-free license to publish or reproduce the published form of this contribution, or to allow others to do so, for U.S. Government purposes. Los Alamos National Laboratory requests that the publisher identify this article as work performed under the auspices of the U.S. Department of Energy. Los Alamos National Laboratory strongly supports academic freedom and a researcher's right to publish; as an institution, however, the Laboratory does not endorse the viewpoint of a publication or guarantee its technical correctness.

Human Factors and Nuclear Criticality Safety Accidents

Mandy Bowles Tomaszewski
Norann Calhoun

Nuclear Criticality Safety Division

Agenda

1. Human Factors
2. Accident Review
   - Tokai Mura
   - Siberian Chemical Combine
3. Procedures
4. Accident Review
   - Los Alamos Waste Recovery
5. Environmental Distractions
6. Accident Review
   - Idaho Fuel Reprocessing
7. Equipment Reliability

Human Factors

Human Factors

- Fissile material operations represent a high consequence system.

- *Understanding basic human factors and establishing controls to prevent common human factors issues helps ensure that a criticality accident will never happen again.*

What Are Human Factors?

- A scientific discipline that applies knowledge about human abilities, characteristics, and limitations to design processes, equipment, and environments.

Human Factors

- Operations represent a high consequence system.
- Operations rely heavily on human involvement.
  - Administrative controls require correct human action
  - Humans must read and interpret procedures
  - Humans execute the process
  - People bring many issues to work with them that can impact the quality of work

A Review of Criticality Accidents – LA 13638

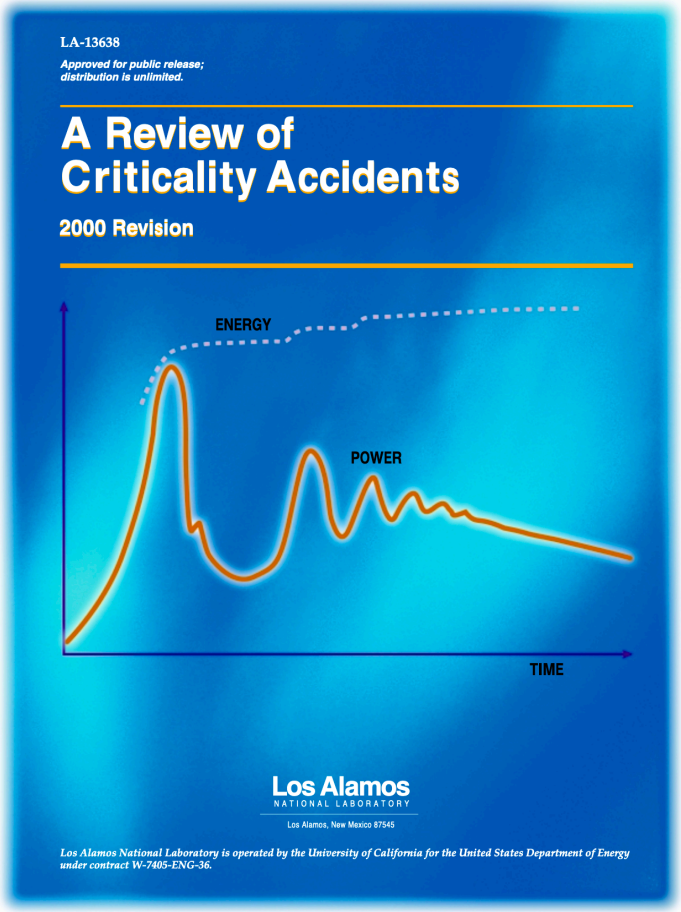

A Review of **60** criticality accidents from 1953 to 1999 concluded that the human element was not only present, but the **dominant cause** in all of the accidents *(LA-13638*)

Operations rely heavily on human involvement.

- Administrative controls require correct human action
- Humans must read and interpret procedures
- Humans execute the process
- People bring many issues to work with them that can impact the quality of work

Accident Review

Harry K. Daghlian, Jr.

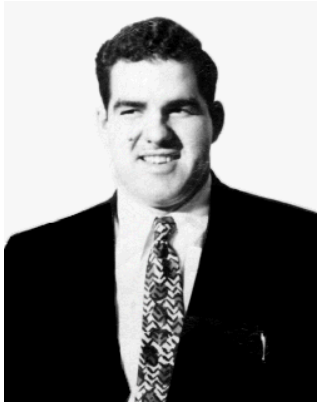

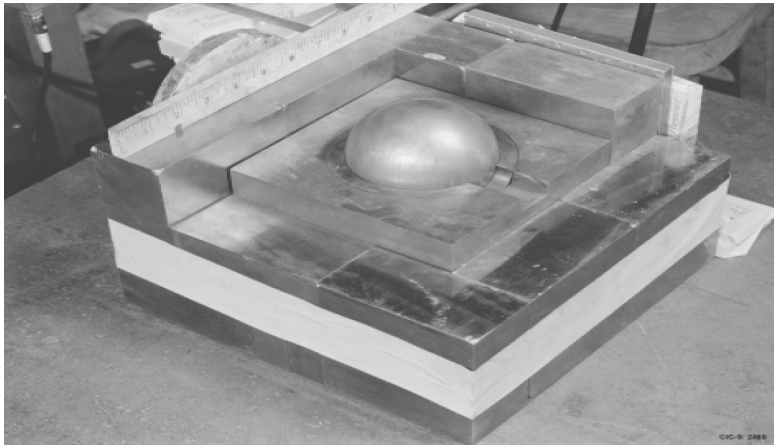

- Experimenting with plutonium sphere
  - Trying to determine amount of tungsten-carbide needed to make Pu sphere go critical
    - ~6 kg δ-phase Pu metal
    - Stack tungsten-carbide bricks around Pu
- Working alone, late at night
- Accident ~9:55pm
- One guard in the room

Louis Slotin

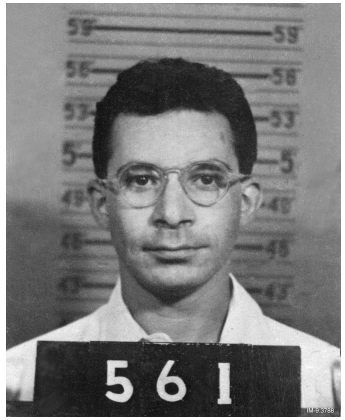

- Experimenting with same Pu sphere as Daghlian
- Demonstrating experiment for eight people
- Spacers not in place between Hemishells
- Spacing being controlled by Slotin with screwdriver
- Screwdriver slipped, closing reflector
- System went super critical

Tokai Mura

Tokai-Mura – 30 September 1999

JCO Fabrication Plant

- 3 licensed SNM facilities
- 2 main buildings for UO2 production from UF6
  - Up to U(5)
- Fuel Conversion Test Building
  - Up to U(20)
  - Infrequent use for one-of-a-kind operations

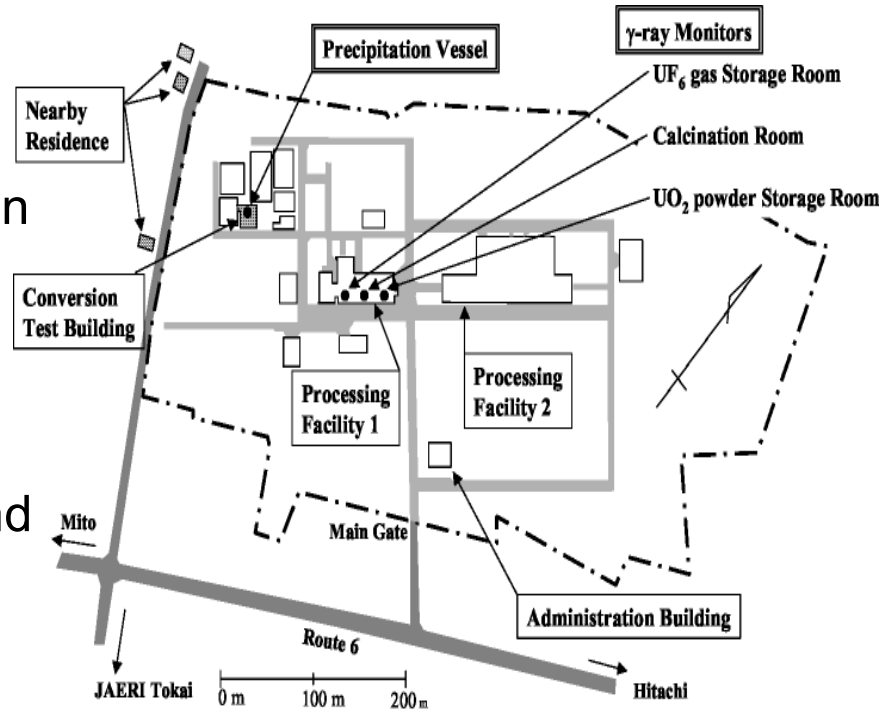

Process Overview

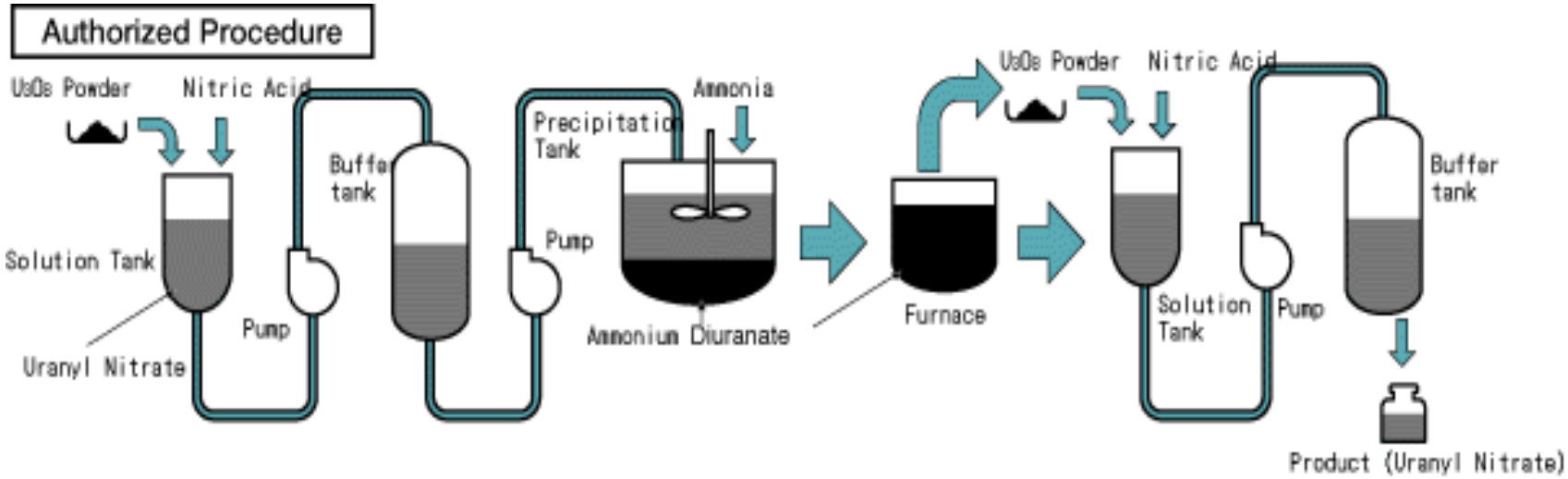

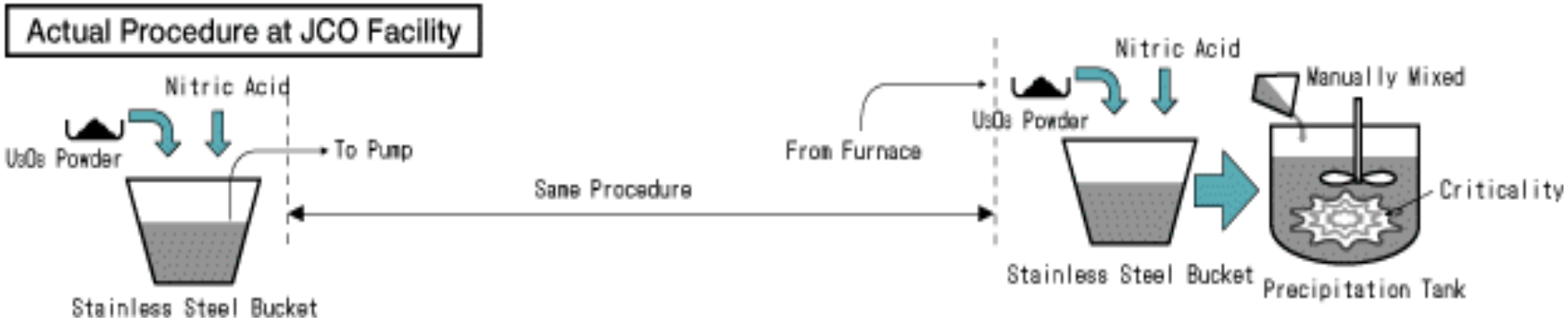

Operator's Positions

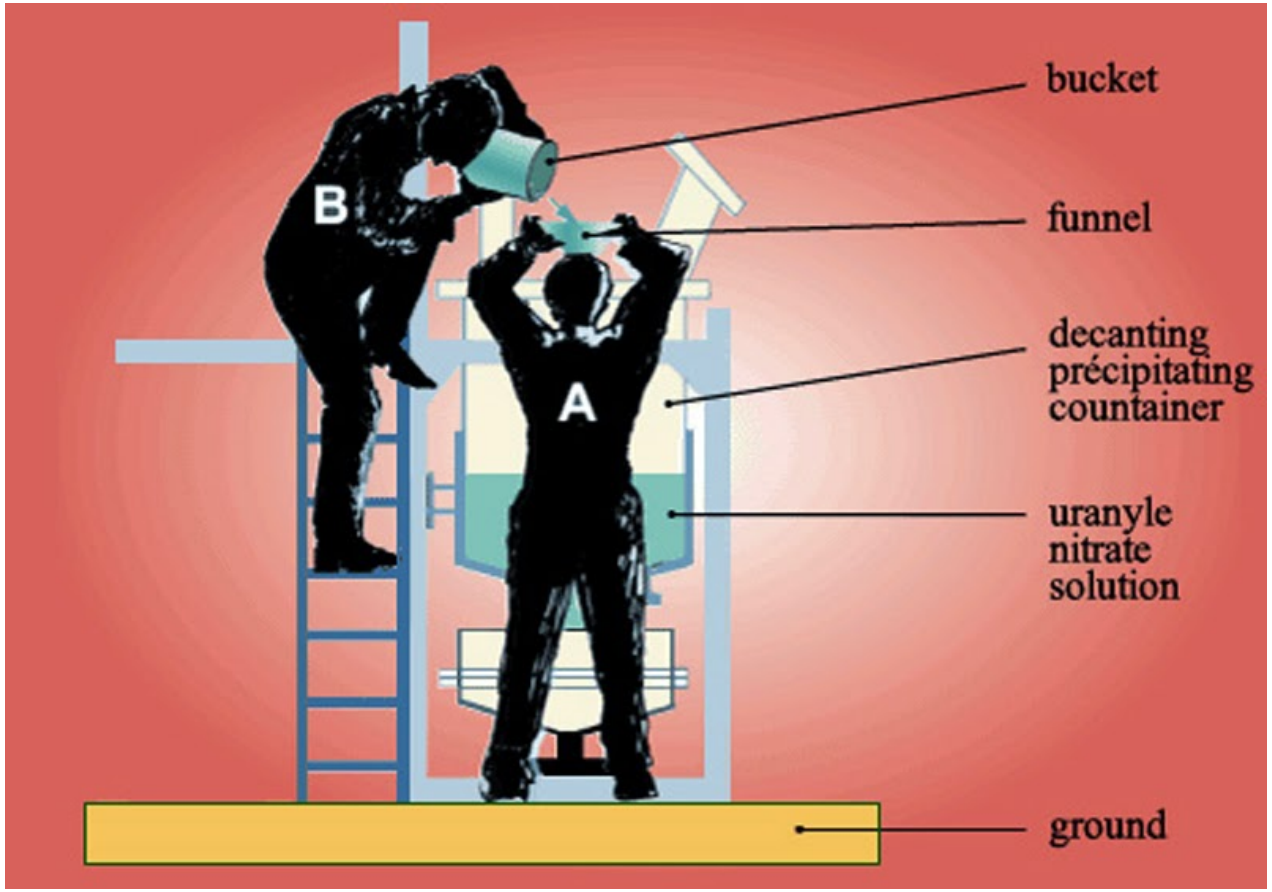

Process Overview

- September 29, 1999
  - Four batches (2.4 kg each) dissolved and transferred to precipitation vessel
- September 30, 1999
  - Three additional batches added
  - Near the end of pouring the 7th batch
    - Gamma alarms in all SNM buildings sounded
- Operators evacuated
  - Reports of “blue flash” and feeling ill
- Reaction terminated 20 hours later

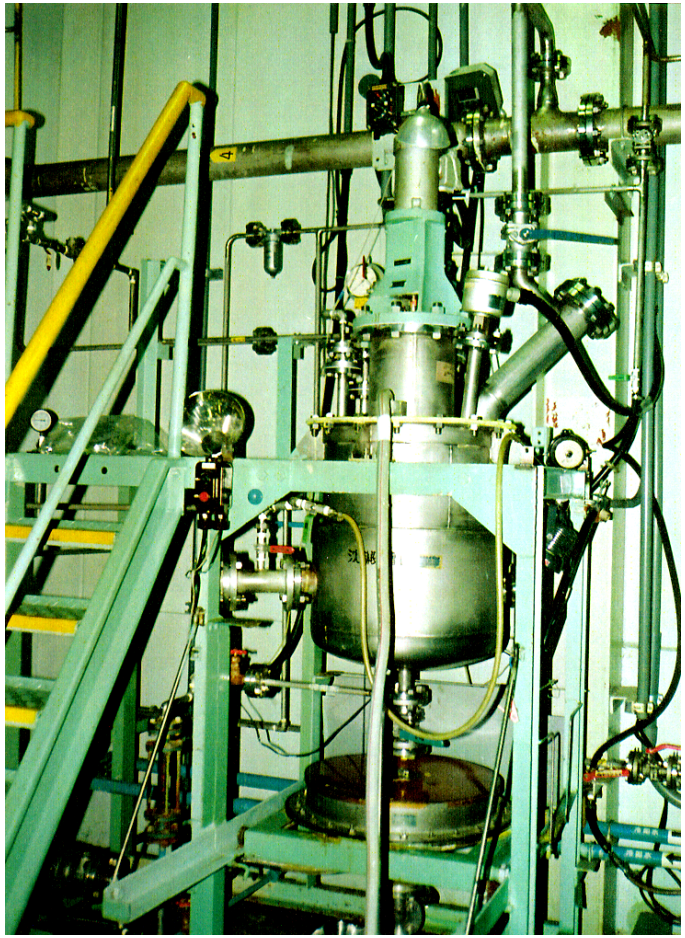

Contributing Factors and Consequences

- **Contributing Factors**
  - Inadequate regulatory oversight
  - Lack of appropriate safety culture
  - Inadequate operator training and qualifications
  - Company pressures
  - Complacency
  - Improper execution of procedures
- **Consequences**
  - 2 operators severely overexposed and died
  - General manager and other employees pleaded guilty to negligence
  - Fines and prison sentences
  - License was cancelled
  - Damage to nuclear industry
  - 200 residents evacuated

Siberian Chemical Combine

Siberian Chemical Combine – 13 December 1978

- Only process criticality accident in history involving solid material
- Building 901, Department 1
  - 16 gloveboxes
  - 7 operators per shift
    - Trained on each process in the department
    - Assigned one process per shift
    - Written procedures prohibited
      - Switching of operations during a shift prohibited
      - Operators to assist one another prohibited
- Specially designed cylindrical containers allow for an infinite array

Process Overview

- 4 containers in workstation 1391-A
  - Containers 6 and 7 physically behind 4 and 5
- 3 containers in workstation 1391-B
- Sample extraction
- Weighing and staging
- Dimensional measurements (1392)
- Containers limited to single ingot regardless of mass
  - Ingots removed, handled, and returned to original container

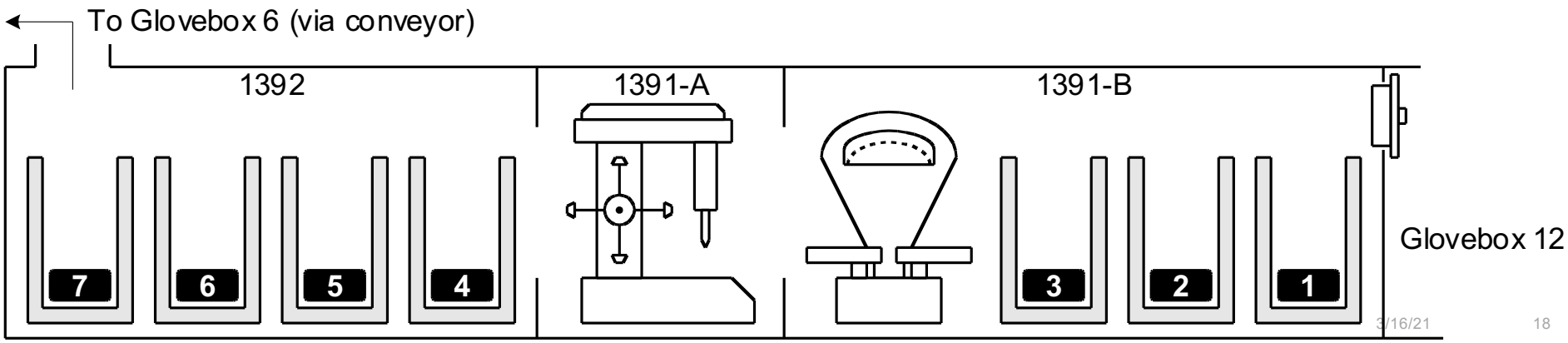

Operation at time of accident

- Operator A requests assistance of Operator B in moving ingots
  - Violation of procedures on part of both operators
- Operator A leaves
- Operator B Transfers ingot 3 to container holding ingot 4
  - Transfers ingot 10 from GB 12 to original ingot 3 container
  - Ingot 10 is expected but should be in container one or two

Operation B's Actions

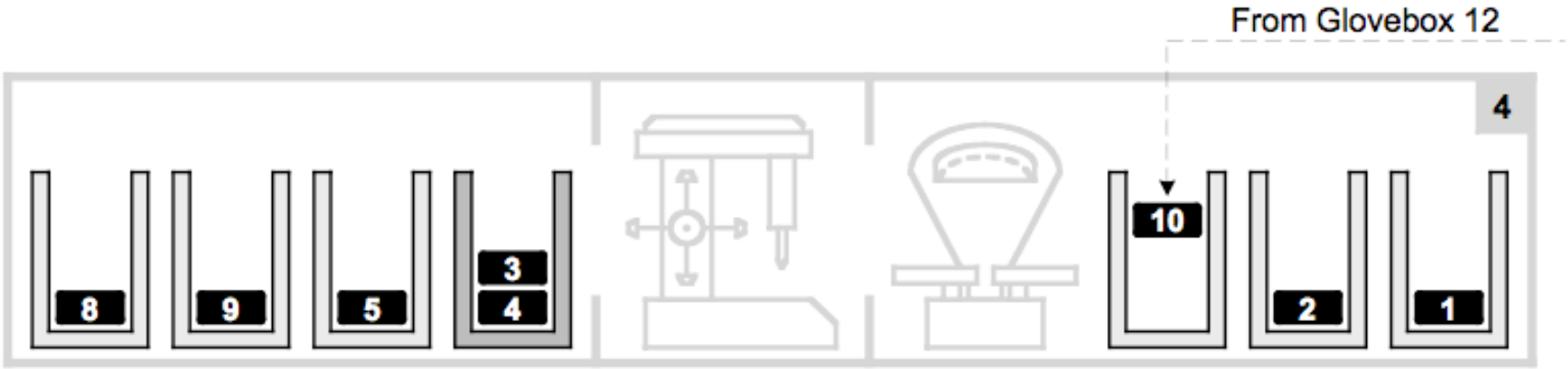

Operation at time of accident

- Operator A returns
  - Assumes but does not confirm that Operator B completed tasks as requested
  - Transfers ingots 1 & 2 to Workstation
    - Believes he is handling ingots 10 and 11
    - Even if container had been empty this was a violation of GB 13 procedures
    - Should have known it contained one ingot

Operator A Final Actions

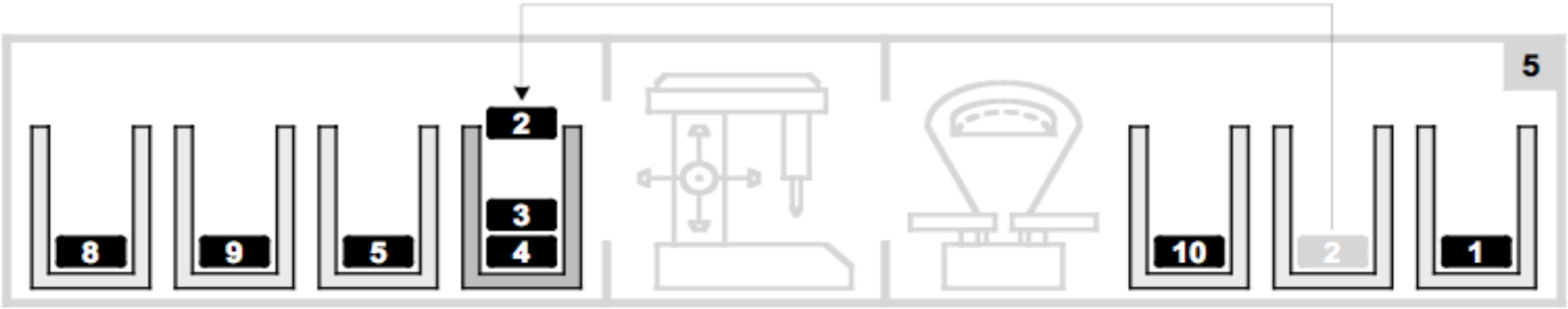

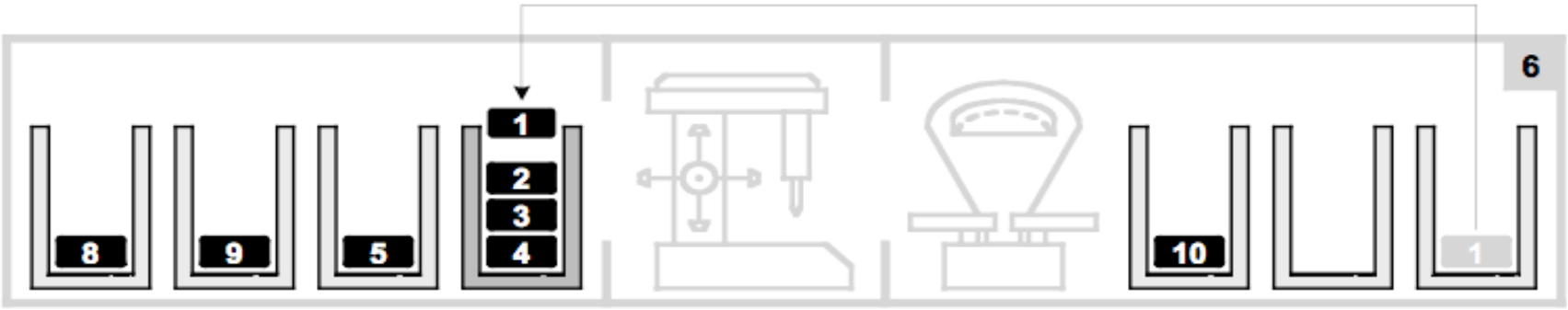

Contributing Factors and Consequences

Contributing Factors

- Written Procedures Prohibited
- Operator A didn't verify what had been completed by Operator B
- Production Pressure
- Cylindrical Containers allowed more material than necessary for process

Consequences

- Operator A
  - 250 rad whole body dose
  - 2000 rad to hands and arms
    - Amputation of both arms up to elbows, eventually developed vision problems
- 7 additional personnel received doses from 5 to 60 rad

Procedures

Procedures

Common Issues With Procedures

- Steps are ambiguous or vague
- Technically inaccurate information
- Mismatch between procedural steps and the order that steps need to be performed
- Information that is critical to the process is missing
- Lack of graphics for complex steps (diagrams, schematics)
- More than one instruction in a step
- Overuse of critical steps
- References to other procedures

Procedures

- Effective procedures make the users' tasks easy and straightforward
  - Provides specific information
  - Supports different users and tasks
  - Provide content that is relevant to the users' needs
  - Clear and unambiguous language
  - Assures consistency and quality of human actions

Los Alamos Waste Recovery

Los Alamos Accident – 30 December 1958

Process Overview

- Waste recovery operations
- Lean residue feed stream
  - Slag, crucibles, etc.
  - Typically < 0.1 g Pu/L

- Annual physical inventory was in progress
- Several vessels being cleaned
- Wash solution from two other vessels were fed to a third
- *Filtering was not performed properly*
- Vessel contained solids, solvents, and lean nitric acid
- Sparging resulted in dissolution and organic stripping of Pu
- Lean aqueous transferred out
- Remaining 200 liters transferred to organic treatment tank

Operator's Position

- Operator stood on a ladder, looked into the site port, and turned a mixing stirrer on.

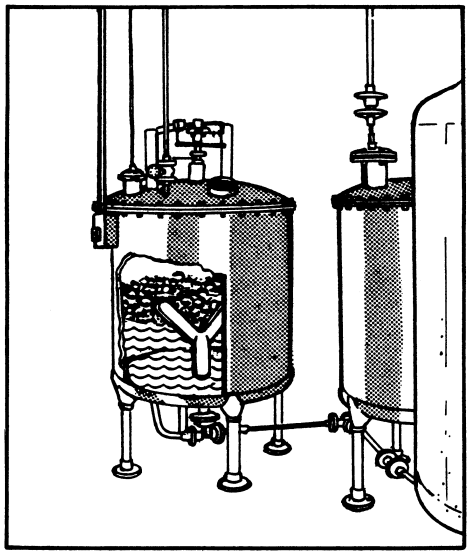

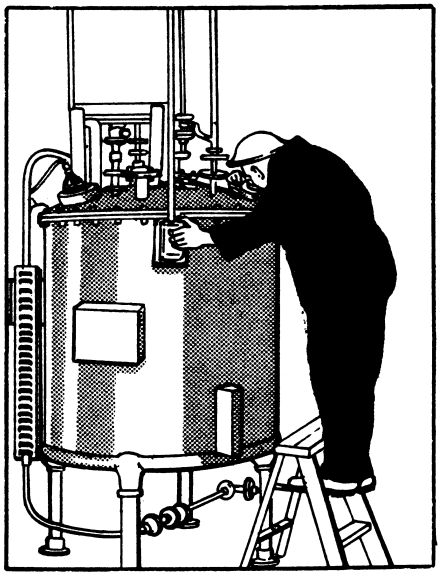

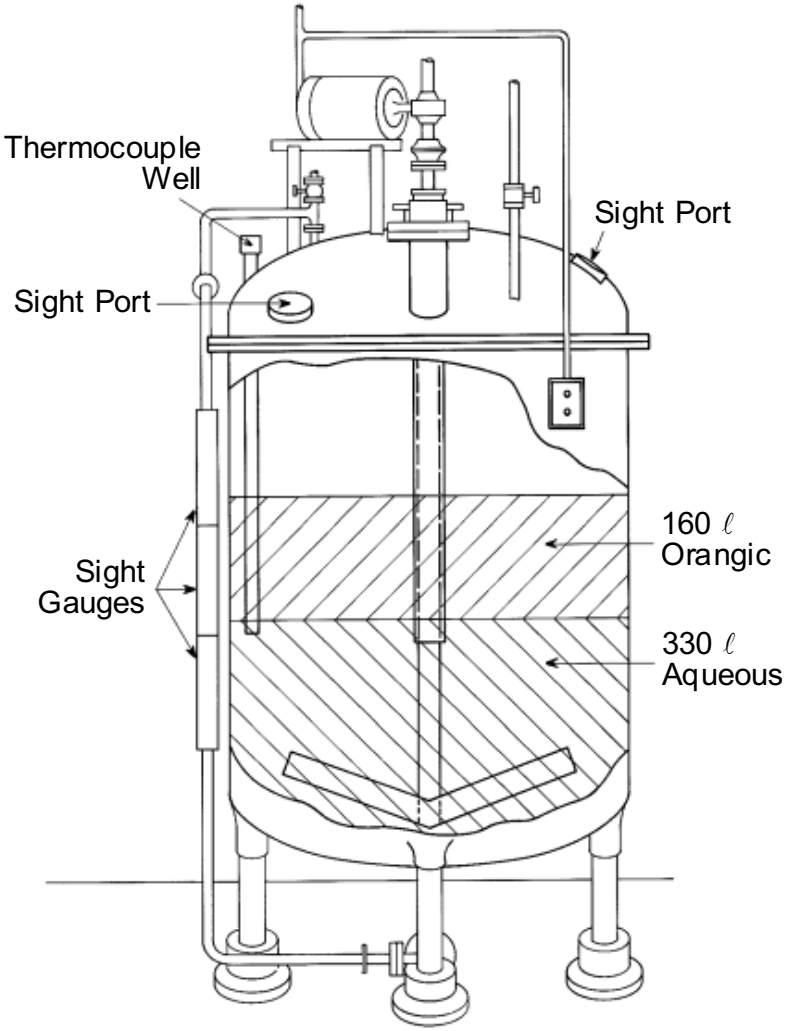

Los Alamos Accident - 30 December 1958

- Forced aqueous up tank walls
- Pulled organic layer down
  - Changed geometry
  - Thickened central region reflected by aqueous
- Prompt criticality achieved
  - Terminated by bubbles and complete
  - mixing
- Operator was knocked to the floor
- Operator dose ~12,000 +/- 6000 rem
  - Died 36 hours later
- Two others nearby
  - 134 and 53 rem
- Tank displaced ~10mm

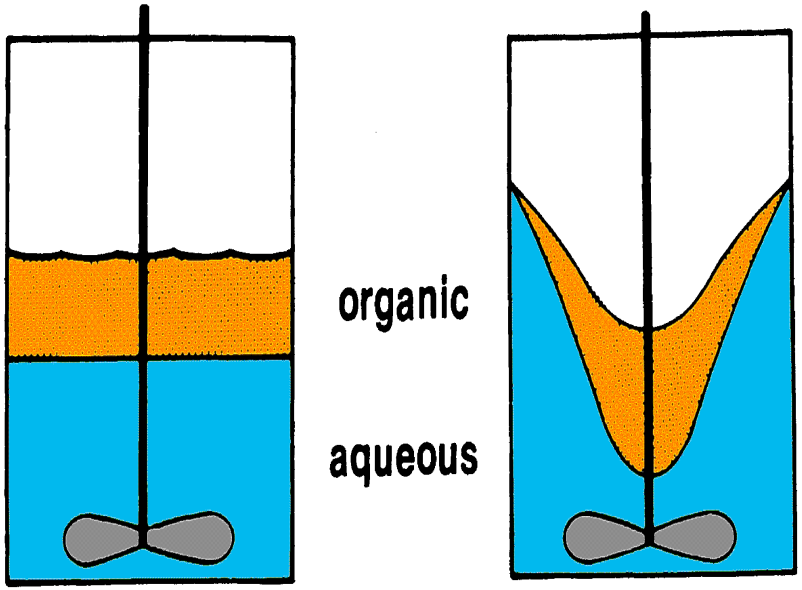

Contributing Factors and Consequences

- **Contributing Factors**
  - Annual physical inventory was in progress
  - *Filtering was not performed*
  - End of Calendar Year

- **Consequences**
  - 1 operators severely overexposed and died
  - Damage to processing equipment

Environmental Distractions

Environmental Distractions

- PPE can be cumbersome
- Awkward positions can make tasks difficult
- Visibility can be obscured by equipment
- Holidays, weekends, and end of day
- Poor Lighting
- Temperature
- Noise
- Stress
- Off Normal Conditions Upset Routine

Idaho Fuel Reprocessing

Idaho Chemical Processing Plant

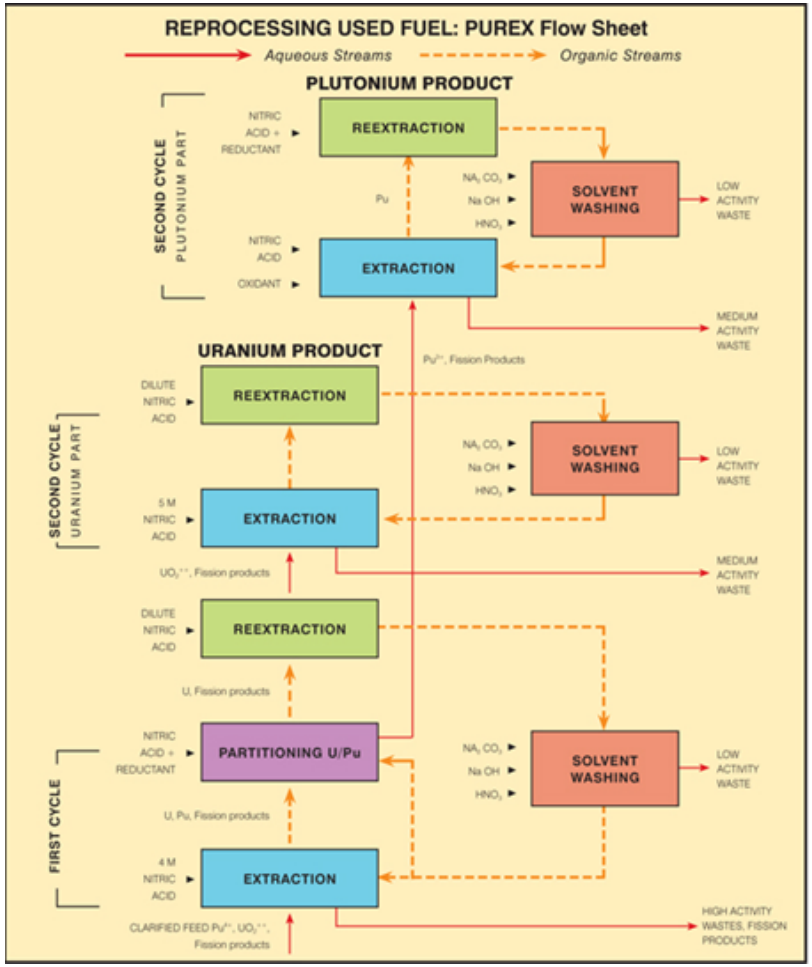

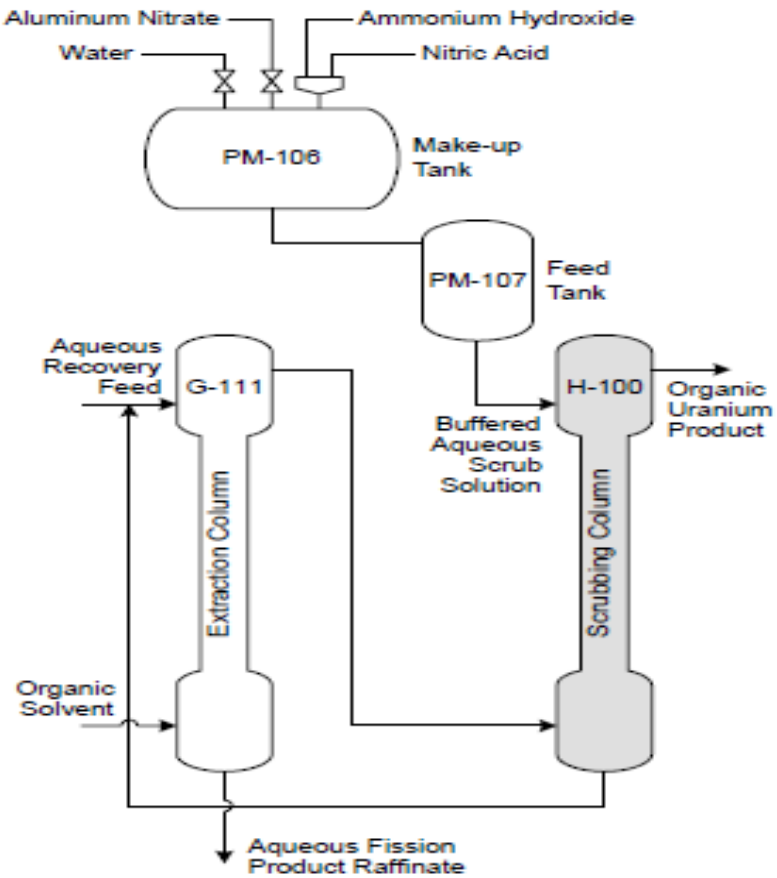

Idaho Accident - 17 October 1978

- Fuel reprocessing plant
  - Aqueous and organic streams to extract fissile material
- Water valve leaked slowly, diluting the aqueous scrub solution from 0.75 M to 0.08 M over the course of a month
- At this molarity, aqueous stripped U, rather than scrubbing fission products
- Gradual uranium buildup in the tanks
- ~10 kg U in Column H-100
- Accident happened in bottom of H-100

Contributing Factors and Consequences

- **Contributing Factors**
  - Water valve on aluminum nitrate make-up tank leaked for about a month.
  - No one noticed extra solution in the feed tank.
  - The chart recorder for the make-up tank run out of paper weeks earlier
  - Density recorder and alarm on aqueous feed tank had not been installed
  - Operating procedure requiring sampling before transfer between aqueous make-up and feed tanks was not followed.
  - In two years preceding the accident, the experience level of the operators had decreased dramatically.
- **Consequences**
  - No significant personnel exposures or damage to equipment, but led to a prolonged, expensive shutdown.

Equipment Reliability

Equipment Reliability

Probability that a system, which includes both technology and human components, will perform its intended function in a satisfactory manner.

- Two main components of reliability impact the reliability and safety of a process.
  - Equipment reliability
  - Human reliability
- Reliability issues may have dire consequences.
  - Equipment must perform reliably
  - People must perform reliably
    - Adherence to administrative controls
    - Interpretation and use of procedures
    - Process execution
    - Controls must be reliable

Questions?