A major purpose of the Technical Information Center is to provide the broadest dissemination possible of information contained in DOE's Research and Development Reports to business, industry, the academic community, and federal, state and local governments.

Although a small portion of this report is not reproducible, it is being made available to expedite the availability of information on the research discussed herein.

1

LA-UR-82-3279

Conf-821103--50

TITLE: Conceptual Designs for 100-MW Space Radiators

AUTHOR(S): F. C. Prenger and J. A. Sullivan

SUBMITTED TO: Advanced Nuclear Systems' Symposium

LA-UR--82-3279

DE83 002542

DISCLAIMER

NOTICE

PORTIONS OF THIS REPORT ARE ILLEGIBLE. It has been reproduced from the best available copy to permit the broadest possible availability.

By acceptance of this article, the publisher recognizes that the U.S. Government retains a nonexclusive, royalty-free license to publish or reproduce the published form of this contribution, or to allow others to do so, for U.S. Government purposes.

The Los Alamos Scientific Laboratory requests that the publisher identify this article as work performed under the auspices of the U.S. Department of Energy.

MASTER

University of California

LOS ALAMOS SCIENTIFIC LABORATORY

Post Office Box 1663 Los Alamos, New Mexico 87545

An Affirmative Action/Equal Opportunity Employer

Form No. 836 R3
St. No. 2629

UNITED STATES
DEPARTMENT OF ENERGY

DISTRIBUTION OF THIS DOCUMENT IS UNLIMITED

CONCEPTUAL DESIGNS FOR 100-MW SPACE RADIATORS

by

F. C. Prenger and J. A. Sullivan

ABSTRACT

A description and comparison of heat rejection systems for multi-megawatt space-based power supplies is given. Current concepts are described, and through a common performance parameter, these are compared with three advanced radiator concepts. The comparison is based on a power system that rejects 100 MW of heat while generating 10 MW of electrical power.

I. INTRODUCTION

Recently increasing attention has been drawn to the importance of compact space power supplies in the successful pursuit of the space resource (Angelo, 1982). This resource has been identified as the deployment of military systems, extraterrestrial materials processing, creation of permanent space habitats, and planetary exploration. Attainment of these goals will require power sources in the multimegawatt range and larger. With power supplies in this size range, the heat rejection subsystem becomes the largest and heaviest component of the system. For this reason new designs for large space heat rejection systems are needed.

As a basis for comparing various heat rejection systems, a baseline performance requirement was defined. In support of a 10 MW_e power system, a 100 MW_t heat rejection subsystem is assumed to be required. Consistent with this conversion efficiency is a heat rejection temperature of 1000 K. In addition to these performance requirements the heat rejection subsystem must be capable of being transported into space either as a deployable unit or as modularized subunits that are assembled in space.

Several advanced radiator design concepts are presented beginning with the most technically feasible system, a heat pipe radiator. Other concepts are presented that are more compact and lighter but are based on less well developed technologies. Finally, a performance parameter is defined that provides a means of comparing the various systems discussed. The concepts are divided into two categories, those that have been proposed previously and new radiator designs that are in the very early stages of definition.

II. PRESENT CONCEPTS

Conventional space radiator designs (MacKay, 1963) employ fin tube geometries as shown in Fig. 1a. The coolant, usually a liquid, is pumped in a circuitous path through tubes that are connected to high thermal conductivity panels that act as fins or extended heat transfer surfaces. Fin tube radiators are heavy because of the need for meteoroid protection around all of the tubing but they have proven to be reliable. A significant improvement in performance can be achieved by utilizing heat pipes as isothermal fins such as shown in Fig. 1b. However, the need for meteoroid protection remains and the resulting weight savings is small.

Heat Pipe Radiators

Several radiator concepts using numerous, redundant heat pipes as fins have been proposed (Werner, 1968 and 1977) and built (Werner, 1975). These systems utilize heat pipes connected to a central manifold containing a circulating coolant. The larger number of fin heat pipes eliminates the need for individual meteoroid protection on each heat pipe because the system is sized to accommodate a nominal loss of heat pipes due to meteoroid penetration. In addition, because of the nearly isothermal performance of the fins, their length can be increased thus reducing the required manifold tubing that must have meteoroid protection. This configuration, shown schematically in Fig. 2, results in a significant weight reduction compared with the conventional designs shown in Fig. 1.

Both the conventional and heat pipe radiators form a stationary structure that acts as the principal radiating surface for heat rejection. The next two systems to be discussed utilize a moving heat rejection surface.

Moving Belt Radiators

The moving belt radiator system consists of a moving heat transfer surface a portion of which is in continuous contact with the reject heat source. Two example configurations (Weatherston, 1960 and Schuerch, 1964) are shown in Figs. 3a and 3b. Both configurations require good thermal contact between the moving belt and the heated roller. The temperature drop across this interface at high power levels could be significant, resulting in a severe performance penalty.

Another concept (Hedgepeth, 1978) employing direct contact between the working fluid and the moving belt is shown in Fig. 4. In this configuration the contact resistance is eliminated, however, the system requires a seal where the belt enters and exits the liquid metal heat exchanger. Development of a satisfactory seal for the proposed operating conditions requires a substantial advance in seal technology and design. Table I shows the parameters for a moving belt radiator with a 100 MW_t capacity. The moving belt radiator combines a large radiating area with a deployable structure.

Particle Radiators

A second type of moving surface radiator is the solid particle or liquid droplet (Mattick, 1980) radiator. The system is shown schematically in Fig. 5. Micron size particles are heated in a direct contact heat exchanger (Bruckner, 1982). The particles are then ejected to space from a "pitcher" and collected in a "catcher." The duration of the trajectory is specified such that the proper amount of heat is rejected from the particles to space. The particles are then reheated with subsequent release by the "pitcher" in a continuous cycle. The density and size of the particle stream is selected to optimize the radiant heat transfer. The particle trajectory is determined by the direction and momentum imparted by the "pitcher." This radiator system takes advantage of the large surface area to volume ratio of small particles.

A variation on the dust particle radiator is the liquid droplet radiator where liquid instead of solid particles are used. It has further been suggested that latent heats of fusion be utilized in the heat rejection system by letting the liquid droplets solidify in transit. For the

liquid system a droplet generator, Fig. 6a, and a liquid collector, Fig. 6b, are required. The technique of generating the droplets has been demonstrated with the development of high speed printers (Kuhn, 1979) in the computing industry. Because of the zero-gravity environment the collector must employ a collection scheme such as a spinning drum with a pump to recirculate the radiator working fluid. The generation of artificial gravity for the collector introduces additional complexity and increases the radiator mass. In addition, creating a high emissivity surface on the liquid droplet is a problem requiring further development. Table II shows the physical parameters for a liquid droplet radiator capable of rejecting 100 MW. Because of the large droplet pathlengths required, the structural weight of the liquid droplet generator/collector system is significant, which detracts from the weight savings inherent to this concept. In the following section several additional high potential heat rejection systems are described.

III. PROPOSED CONCEPTS

Electrostatic Thermal Energy Radiator

The electrostatic thermal radiator ETHER is a new concept*, which offers the promise of lower weight than the pitcher/catcher liquid droplet

*These data were supplied by R. Hoeberling, Group AT-5, Los Alamos National Laboratory.

radiator. The concept is shown schematically in Fig. 7. The working media is a liquid metal such as tin, which is formed into small (50 μm diameter) droplets and subsequently charged to 10^{-13} to 10^{-15} coulombs. The droplets, which are formed into a closely spaced (250 μm spacing) train, are ejected from the power system into space. Due to an applied charge on the space craft that is opposite the droplet charge, the droplets will execute a slightly elleptical orbit. If the ejection velocity is less than the escape velocity for the applied spacecraft charge, the particle stream will form a closed orbit. Thus, the collector for the particles can be located on the space craft proper. This arrangement offers the promise of being lighter than an uncharged system because the boom and fluid channels necessary to support a remote collector are eliminated. During the orbit each droplet radiates heat to outer space. In this heat rejection system, the time in orbit can be controlled by controlling the electrostatic potential between the droplets and the spacecraft. Another significant feature of this type of radiator is the possibility of charging the payload section of the spacecraft the same as the droplets to avoid contamination. A possible configuration for the system is shown in Fig. 8.

Table III lists a typical set of parameters for the ETHER radiator for 100 MW of heat rejection.

Rotating Balloon Radiators

The rotating balloon radiator concept* is one wherein a large radiator surface area is achieved by employing thin light-weight materials such as graphite fiber bonded to steel in rotating radiator structures. One

*These data were supplied by D. R. Koenig, Group Q-13, Los Alamos National Laboratory.

such system is shown schematically in Fig. 9 and another embodiment is shown in Fig. 10. In these concepts, liquid or vapor is ducted to the heat rejection surface by a central duct that also serves as support. When the heat transfer fluid is liquid it is sprayed onto the rotating surface; when it is vapor it condenses on the surface. Radiation to space cools the liquid as it is forced by the rotational body forces to flow to the outer extremities of the radiator where liquid pumps are located. This concept offers the possibility of a light and flexible envelope structure that could be folded for launch. A second advantage is the ability to control the emissivity of the outer surface through the application of high emissivity coatings. A disadvantage is the suceptability to meteorite damage, however, it is not clear how much damage would be required to render the system inoperable.

For comparison to the previous concepts Table IV gives a set of calculated performance parameters for the rotating sphere radiator for 100 MW_t heat rejection. An estimate of the mass of a rotating sphere radiator is presented in Table V.

Filament Space Radiator Concept

The filament radiator concept* discussed here is one wherein a continuous filament of a viscous material such as glass is drawn from a hot pool and caused to execute a trajectory in space prior to returning to the space craft. The concept is one of a continuously renewable belt composed of a large number of very small (10 μm diameter) filaments. A schematic of such a heat rejection system is shown in Fig. 11.

*These data were supplied by M. A. Merrigan, Group Q-13, Los Alamos National Laboratory.

The generation of small filaments gives a large surface area to volume ratio for this concept. As in the charged droplet concept the material exit and return points can be colocated on the space craft instead of at the opposite ends of a long boom. The concept offers the promise of low mass loss although some problems with filament breakage need resolution. The physics governing the heat rejection for the filament radiator are very similar to those governing the liquid droplet systems. Table VI gives a list of typical performance parameters for 100 MW of heat rejection with a filament radiator. An estimate of the mass of a filament radiator system is shown in Table VII.

IV. SPACE RADIATOR PERFORMANCE

To make a meaningful comparison between the various proposed systems, a performance parameter based on radiator mass per unit of heat rejection is proposed. Designating the parameter as Z we can write:

$$Z = \frac{M}{Q} \quad .$$

Heat rejection from the radiator surface is proportional to the fourth power of the radiating temperature,

$$Q = 2A\sigma\varepsilon T^4 \quad ,$$

where both sides of the surface are considered active. Then the performance parameter is:

$$Z = \frac{M}{2A\sigma\varepsilon T^4} \quad .$$

If the surface emissivity can be made close to unity then the above equation simplifies to:

$$Z = \frac{M}{2A\sigma} \left(\frac{1}{T^4}\right) \quad .$$

The first term in the above equation is designated the temperature coefficient and given the symbol C so that

$$Z = \frac{C}{T^4} \quad .$$

Table VIII lists typical values of C for fin tube, heat pipe, and particle radiators. The results from Table VIII are plotted in Fig. 12 along with data for proposed radiation systems. Also data for the large power advanced systems discussed in Section III are shown. At operating temperatures near 1000 K the performance variation between systems is a factor of about 150 based on Z. With such potential improvements in performance additional studies are needed to determine the engineering feasibility of the proposed systems.

V. CONCLUSIONS

For space power systems operating in the multi-megawatt regime the heat rejection system becomes weight controlling. For example, a 100 MW_t heat-rejection system operating at 1000 K would have a mass of about 20,000 kg using heat pipe technology. The radiator mass for this example was taken from Fig. 12. The entire system for a 10 MW_e power level is estimated to be around 30,000 kg. If one of the advanced technologies could be developed the radiator mass could be reduced to around 2000 kg. The total weight for a 10 MW_e system with an advanced radiator would be around 12,000 kg. Potential weight savings of this magnitude are a strong incentive to development of advanced space radiators.

NOMENCLATURE

A	Surface area of radiating panel
C	Temperature coefficient
M	Mass
Q	Heat rejection
T	Temperature
ε	Surface emissivity
σ	Stefan-Boltzmann constant

REFERENCES

J. A. Angelo and D. Buden, "Nuclear Power-Key to Man's Extraterrestrial Civilization," 17th IECEC, Los Angeles, CA, August 1982.

A. P. Bruckner and A. Hertzberg, "Direct Contact Heat Exchangers for Thermal Management in Space," 17th IECEC, Los Angeles, CA, August 1982.

J. M. Hedgepeth, "Ultralightweight Structures for Space Power," Third NASA Conference on Radiation Energy Conversion, January 1978.

L. Kuhn and R. A. Myers, "Ink-Jet Printing," Scientific American, April 1979.

D. B. MacKay, Design of Space Power Plants, Prentice-Hall, Inc.; Englewood Cliffs, NJ, 1963.

A. T. Mattick and A. Hertzberg, "Liquid Droplet Radiators for Heat Rejection in Space," 15th IECEC, Seattle, WA, 1980.

H. Schuerch and W. Robbins, "Rotary, Deployable Space Solar Power Supply," NASA report CR-122, October 1964.

R. C. Weatherston and W. E. Smith, "A Method for Heat Rejection from Space Power Plants," ARS Journal, pp 2[illegible]-260, March 1960.

R. W. Werner and G. A. Carlson, "Heat Pipe Radiator for Space Power Plants," IECEC Proceedings, Boulder, CO, August, 1968.

R. W. Werner and G. A. Carlson, "Solar Power Satellite System Definition Study," Rept. No. D180-22876-2, Vol. 2, Boeing Aerospace Co., Seattle, WA, December, 1977.

R. W. Werner and G. A. Carlson, "A Study of the Application of Advanced Heat Pipe Technology to Radiators for Nuclear Spacecraft," Final Report, Thermacore, Inc., Lebanon, PA, December, 1975.

LIST OF TABLE CAPTIONS

Table I: Physical Parameters of Direct Contact Belt Radiator

Table II: Physical Characteristics of Liquid Droplet Radiator

Table III: Parameters for a 100 MW_t Electrostatic Thermal Radiator

Table IV: Rotating Sphere Typical Parameters

Table V: Rotating Balloon Radiator Mass Summary, kg

Table VI: Performance Parameter for a 100 MW_t Filament Radiator

Table VII: Filament Radiator Concept Estimated Masses (kg) for a 100 MW System

Table VIII: Relative Performance Radiator Types

LIST OF FIGURE CAPTIONS

Figure 1: Fin Tube Radiators

Figure 2: LLL Heat Pipe Radiator

Figure 3: Direct Contact Belt Radiator

Figure 4: Convection Heated Belt Radiator

Figure 5: Dust Particle Radiator

Figure 6: Liquid Droplet Radiator Components

Figure 7: Schematic of the Electrostatic Thermal Radiator Concept

Figure 8: Possible Ether Configuration

Figure 9: Rotating Balloon (Sphere) Radiator

Figure 10: Rotating Balloon (Disk) Radiator

Figure 11: Schematic of a Filament Space Radiator

Figure 12: Comparison of Advanced Space Radiator Performance

TABLE I
PHYSICAL PARAMETERS OF DIRECT CONTACT BELT RADIATOR

HEAT REJECTION	100 MW
BELT MATERIAL	GRAPHITE BONDED TO STEEL
BELT WIDTH	11.6 m
BELT LENGTH	131 m
BELT VELOCITY	15.2 m/s
DRUM DIAMETER	0.9

TOTAL MASS (BELT AND DRUM) = 7260 kg

BELT T = 560 K

TABLE II
PHYSICAL CHARACTERISTICS OF LIQUID DROPLET RADIATOR

MATERIAL	TIN DROPLET
DROPLET DIAMETER	50 μm
DROPLET EMISSIVITY	0.2
DROPLET TRANSIT TIME	3.45 s
DROPLET TEMPERATURE	400 K
SHEET LENGTH	58 m
SHEET HEIGHT	24 m
DROPLET SHEET THICKNESS	4.8 cm
COLLECTOR DIAMETER	1 m
DROPLET SPACING	250 μm
M/Q	0.017 kg/kW

TABLE III
PARAMETERS FOR A 100 MW_t ELECTROSTATIC THERMAL RADIATOR

DROPLET MATERIAL	TIN
INITIAL TEMPERATURE	1000K
DROPLET DIAMETER	50 μm
DROPLET SPACING	250 μm
DROPLET ROUND-TRIP TIME	4 s
POWER STATION POTENTIAL	450 kV
DROPLET MASS	4.3×10^{-10} kg
DROPLET INITIAL VELOCITY	10 m/s

TABLE IV
ROTATING SPHERE TYPICAL PARAMETERS

THERMAL POWER, MW	100
AVERAGE REJECTION TEMPERATURE, K	1000
SURFACE EMISSIVITY	0.6
WORKING FLUID	SODIUM VAPOR
ENVELOPE MATERIALS: 0.25 mm CARBON CLOTH BONDED TO 0.55 mm STAINLESS STEEL FOIL	
TOTAL RADIATING AREA, m^2	2200
SPHERE DIAMETER, m	26
LIQUID FLOW RATE, kg/s	24
LIQUID FLOW RATE, m^3/s	0.031
AVERAGE FILM THICKNESS (LAMINAR FLOW), mm	0.5
FLUID VELOCITY AT PERIPHERY, m/s	0.41
ROTATION FREQUENCY, rpm	10
CENTRIFUGAL ACCELERATION ON PERIPHERY, g	3.6
SODIUM VAPOR PRESSURE, 10^5 PASCAL	0.19 (2.8 psi)
HOOP STRESS, 10^5 PASCAL	5,000 (73,000 psi)
DELTA P PUMPS, 10^5 PASCAL	1.1 (16 psi)
PUMPING POWER, kW	3.4

TABLE V
ROTATING BALLOON RADIATOR
MASS SUMMARY, kg

	CONDENSING VAPOR	LIQUID
ENVELOPE	2,200	2,200
LIQUID FILM	770	1,690
LIQUID ON PERIPHERY	230	1,150
RETURN PIPE WITH LIQUID	180	1,620
CENTER SHAFT	400	810
PUMPS	50	500
DRIVE MOTOR	50	50
STRUCTURE (10%)	390	000
TOTAL	4,270	8,820
SPECIFIC MASS, kg/kW	0.04	0.09

TABLE VI
PERFORMANCE PARAMETER FOR A 100 MW_t FILAMENT RADIATOR

PARAMETER	VALUE
TOTAL THERMAL CAPACITY	100 MW
FILAMENT EXIT TEMPERATURE	1000 K
FILAMENT RETURN TEMPERATURE	300 K
FILAMENT DIAMETER	7.5 m
FILAMENT MATERIAL (GLASS) FLOWRATE	140 kg/s
FILAMENT VELOCITY	100 m/s
TRANSIT TIME	1 s
TOTAL NUMBER OF FILAMENTS	1.4×10^7
FILAMENTS PER NOZZLE BANK	1000
NUMBER OF NOZZLE BANKS REQUIRED	14,000

TABLE VII
FILAMENT RADIATOR CONCEPT ESTIMATED MASSES FOR A 100 MW SYSTEM (kG)

FILAMENTS	140
MELT	500
HEAT EXCHANGER	500
BUS	300
COIL	50
TOTAL	1490

$$Z = \frac{1490}{1 \times 10^5} = 1.49 \times 10^{-2} \text{ kg/kW}$$

TABLE VIII
RELATIVE PERFORMANCE OF RADIATOR TYPES

TYPE	$C\left(\frac{kg-K^4}{kW}\right)$	$M/A\left(\frac{kg}{m^2}\right)$
FIN TUBE	8.11×10^{11}	92
HEAT PIPE	1.76×10^{11}	20
PARTICLE	6.97×10^{10}	7.9

where $c = 8.82 \times 10^9$ M/A for the units indicated.

Fig. 1.

FIN TUBE RADIATORS

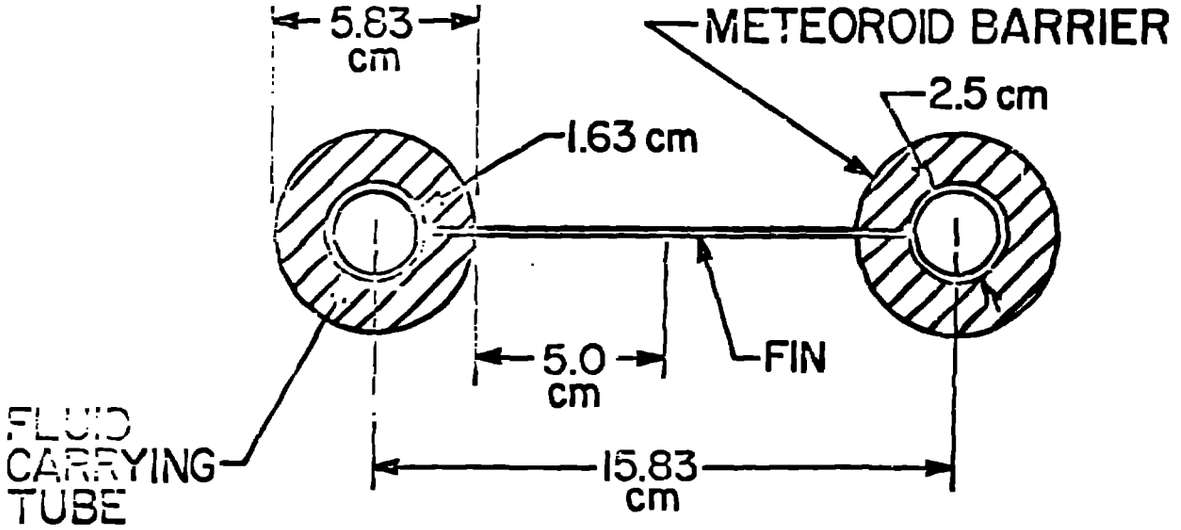

CONVENTIONAL DESIGN (a)

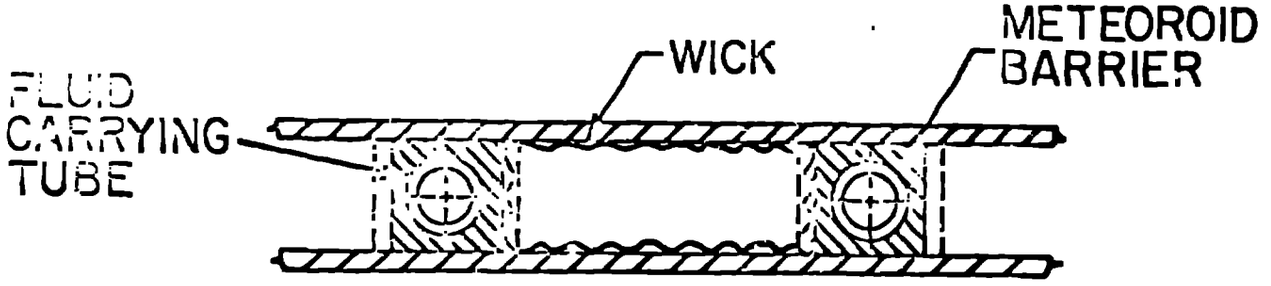

ISOTHERMAL FIN DESIGN (b)

Fig. 2

LLL HEAT PIPE RADIATOR

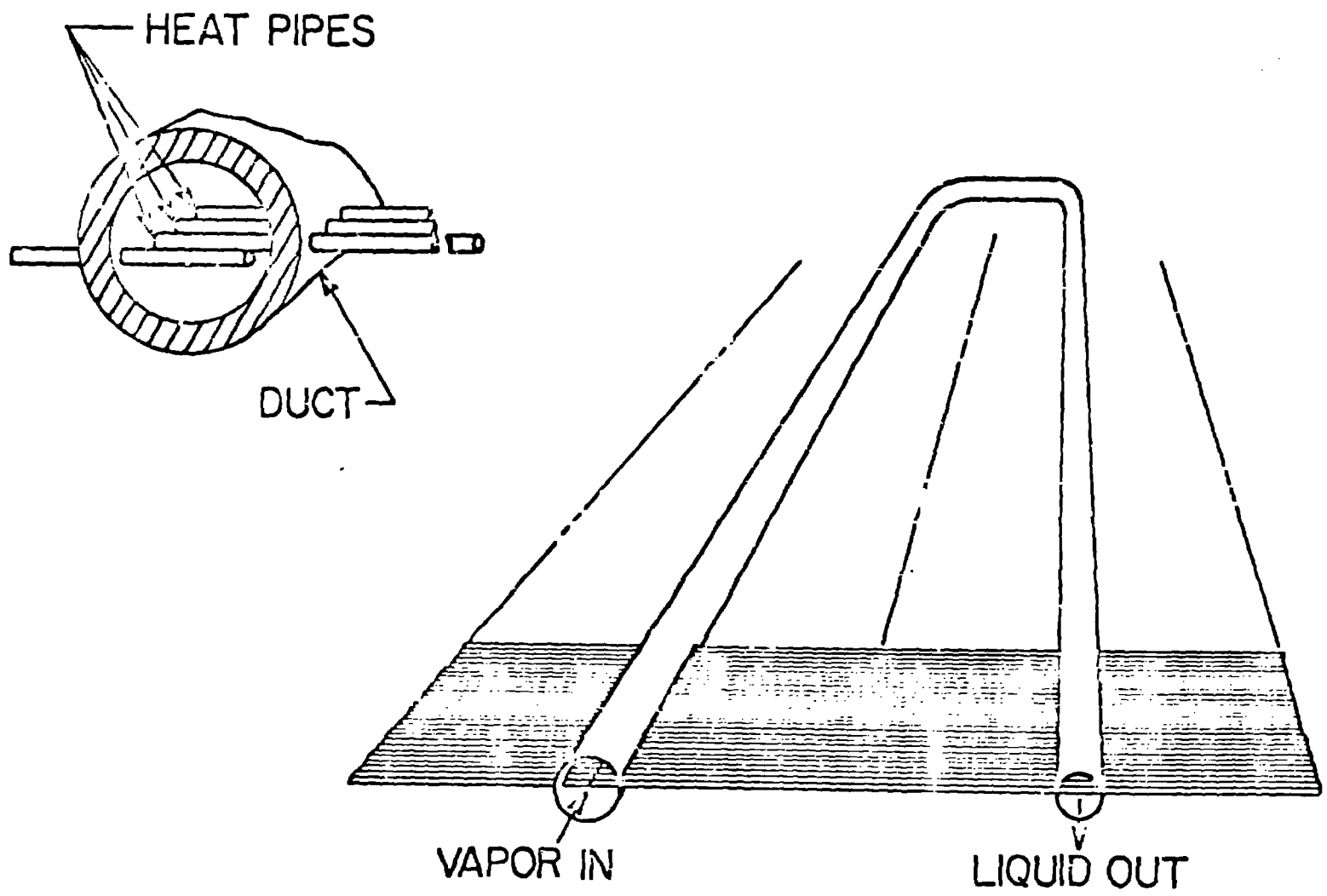

Fig. 3

DIRECT CONTACT BELT RADIATOR

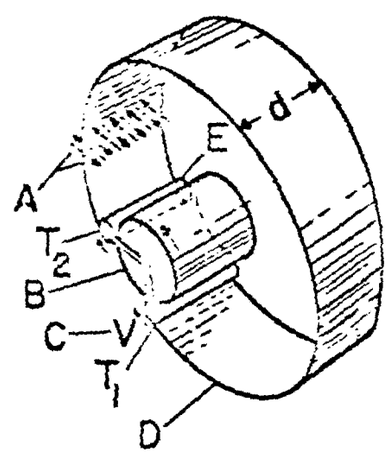

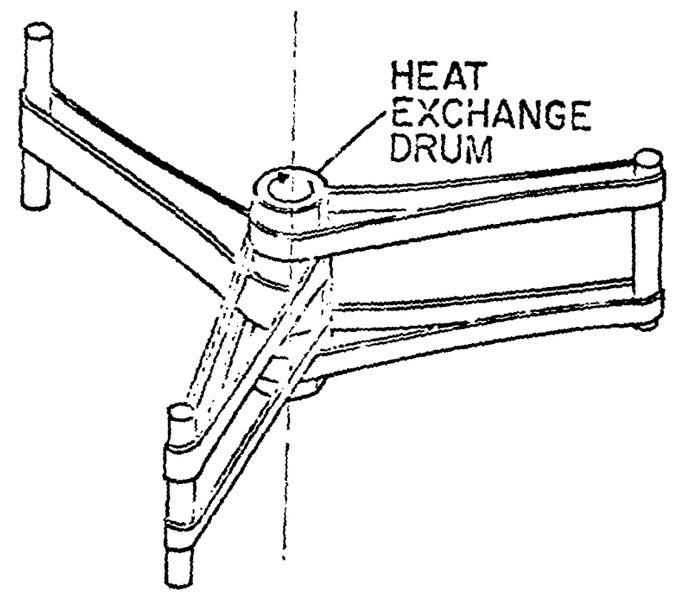

A. BELT LOSES HEAT BY RADIATION FROM BOTH SIDES
B. HEAT EXCHANGE DRUM
C. BELT SPEED
D. HEAT EXCHANGE BELT
E. GUIDE ROLLER

CONCEPT (a)

CONCEPT (b)

Fig. 4

CONVECTION HEATED BELT RADIATOR

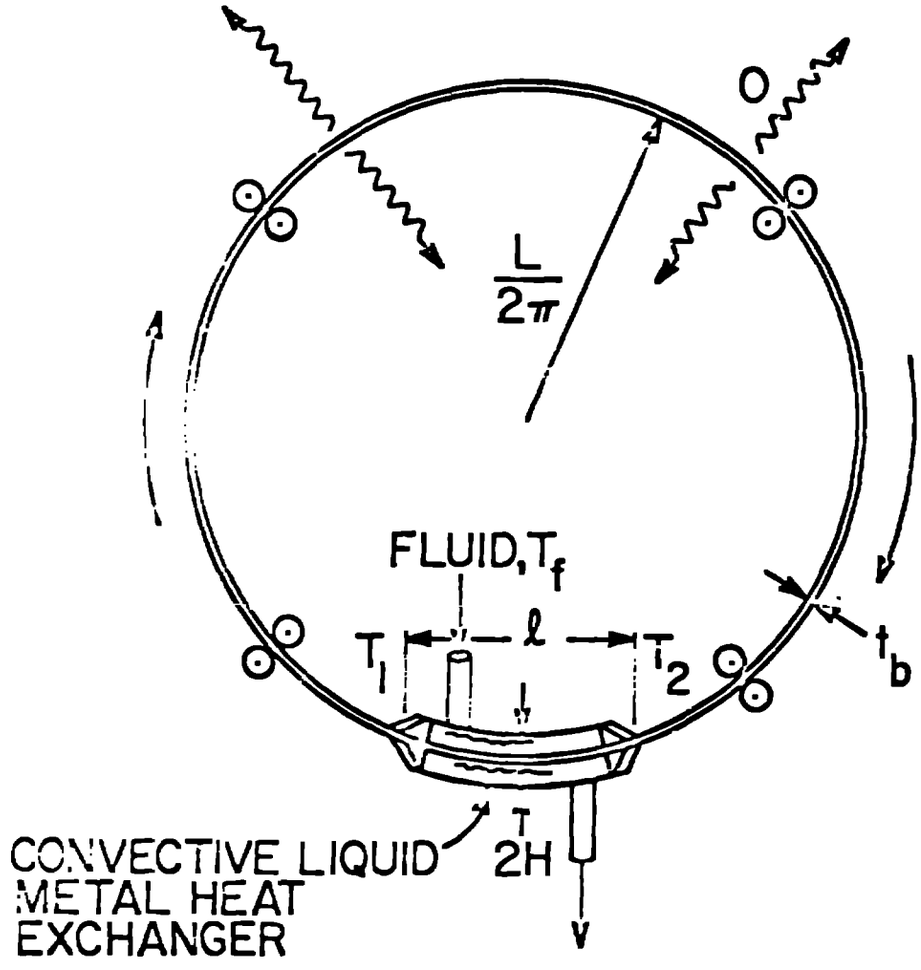

Fig. 5

DUST PARTICLE RADIATOR

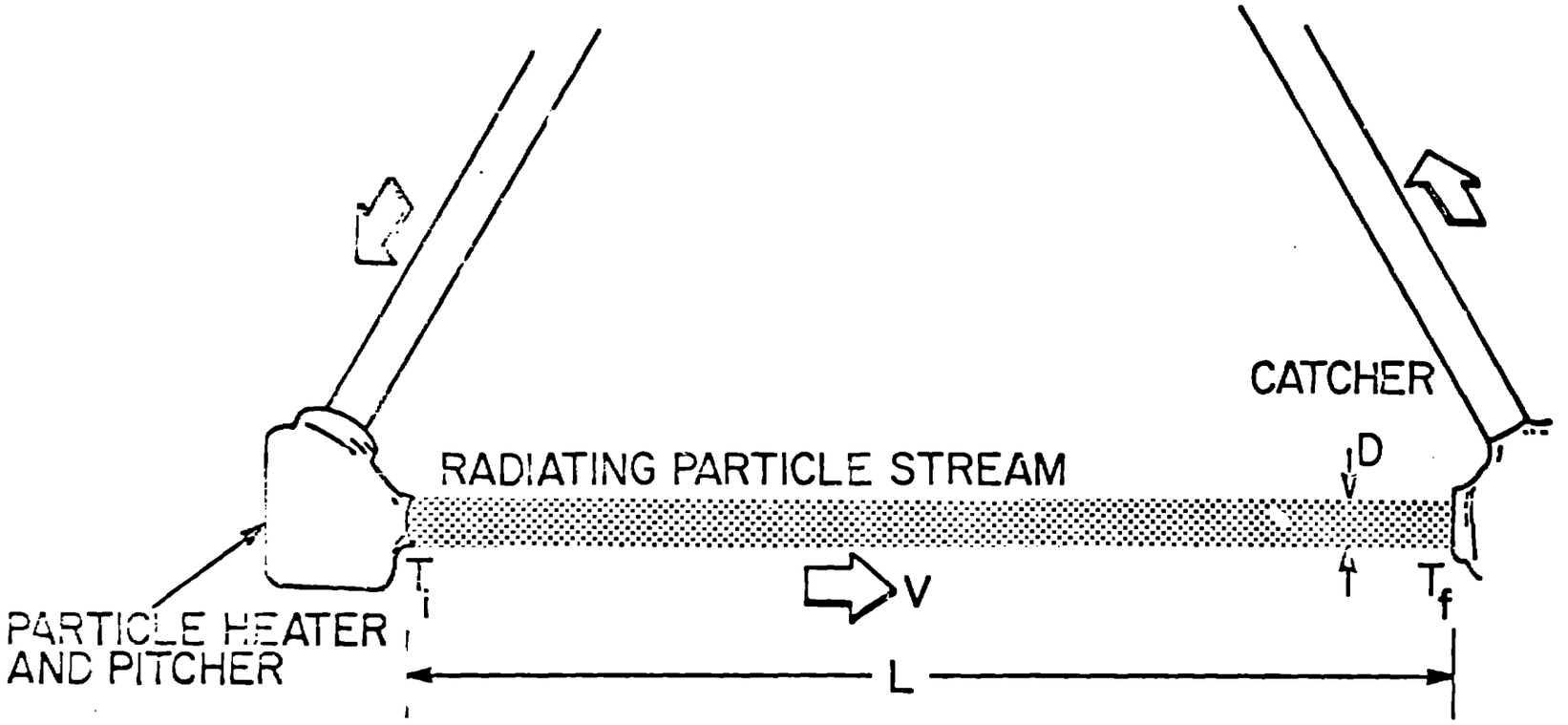

Fig. 6

LIQUID DROPLET RADIATOR COMPONENTS

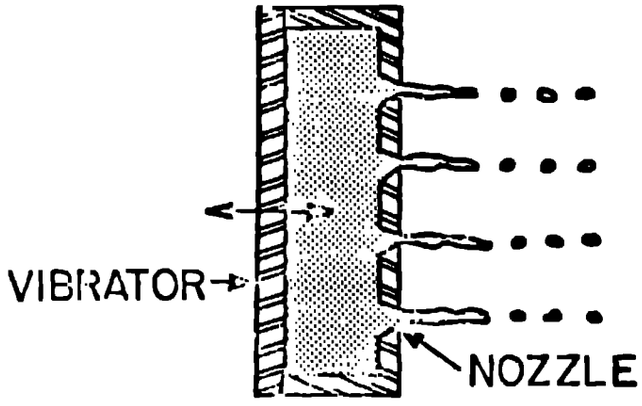

DROPLET GENERATOR

(a)

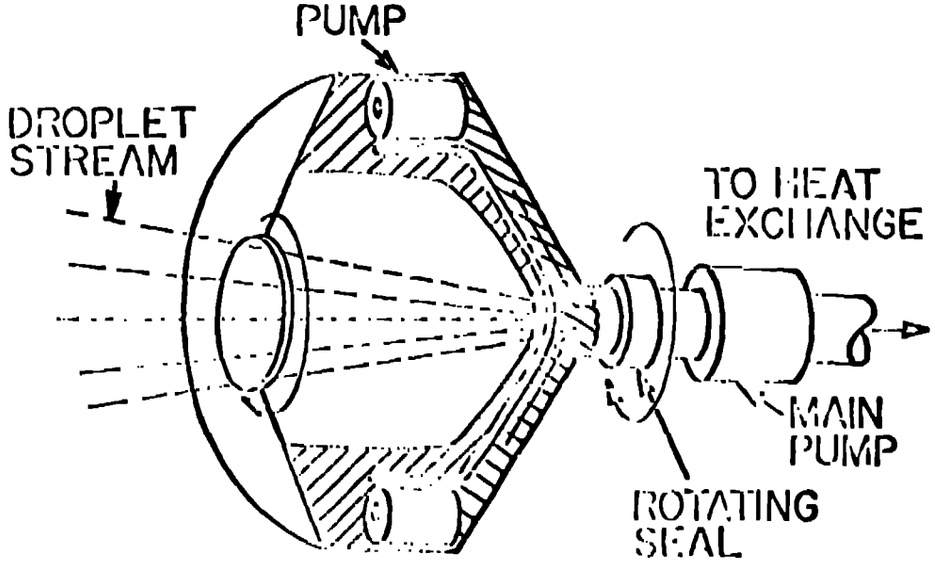

DROPLET COLLECTOR

(b)

Fig. 7

SCHEMATIC OF THE ELECTROSTATIC THERMAL RADIATOR CONCEPT

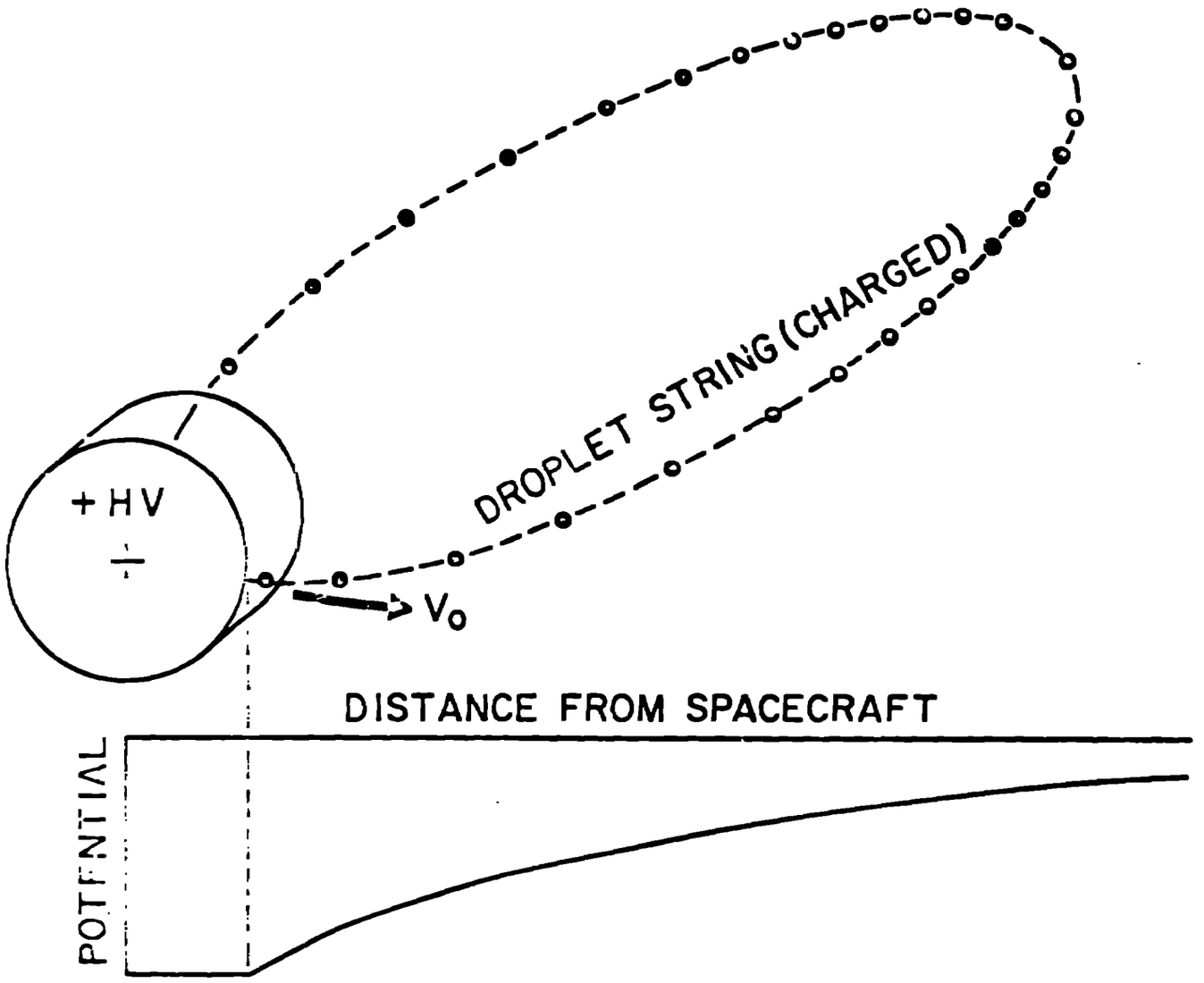

Fig. 8

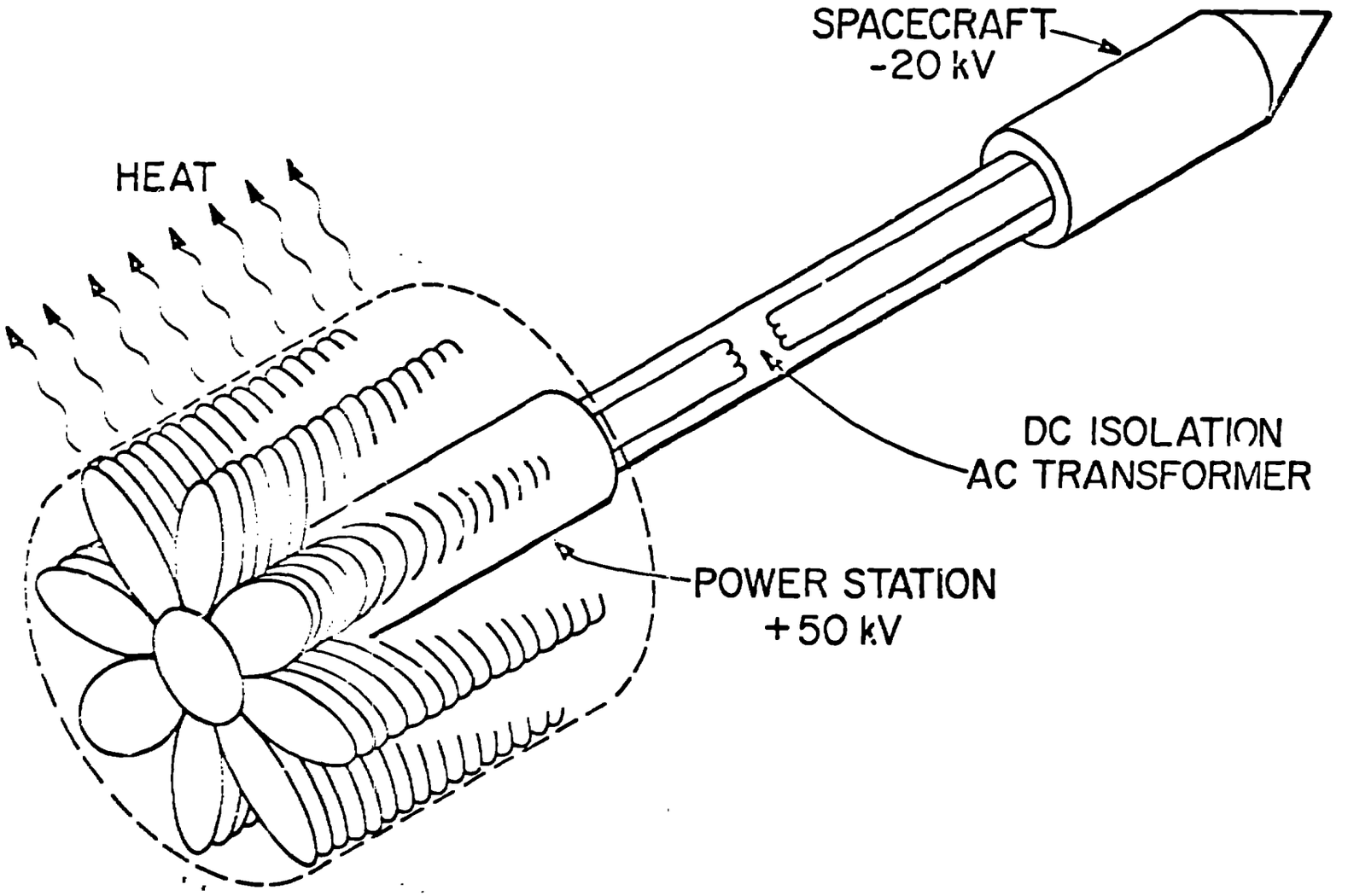
SPACECRAFT
-20 kV
HEAT
DC ISOLATION
AC TRANSFORMER
POWER STATION
+50 kV

Fig. 9

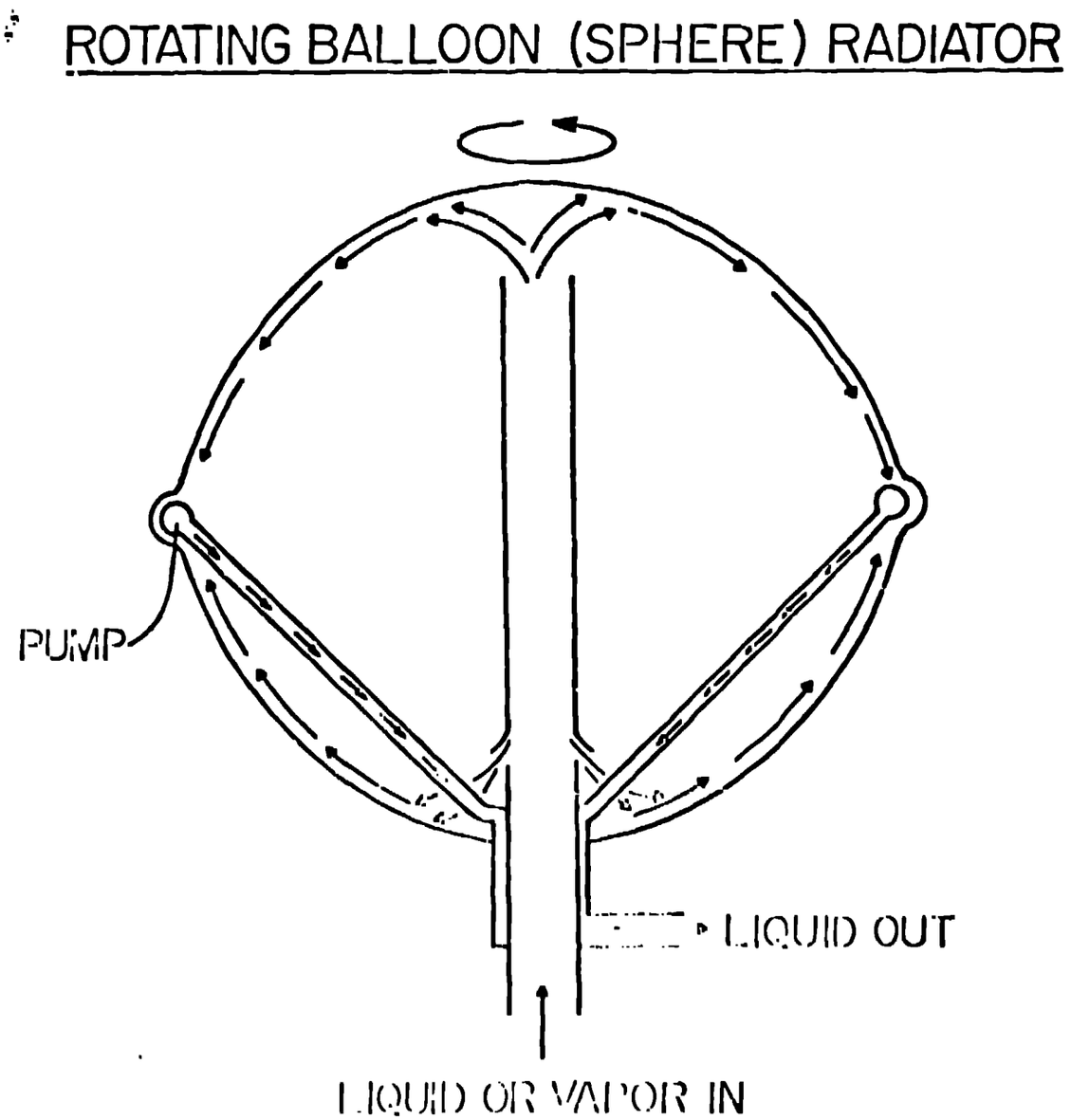
ROTATING BALLOON (SPHERE) RADIATOR
PUMP
LIQUID OUT
LIQUID OR VAPOR IN

ROTATING BALLOON (DISK) RADIATOR

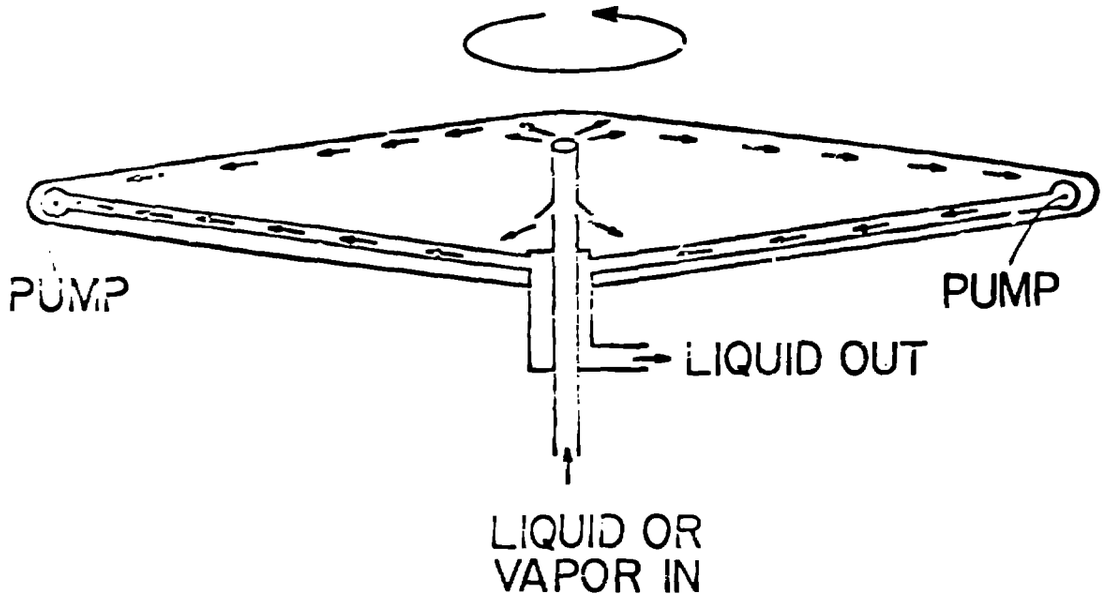

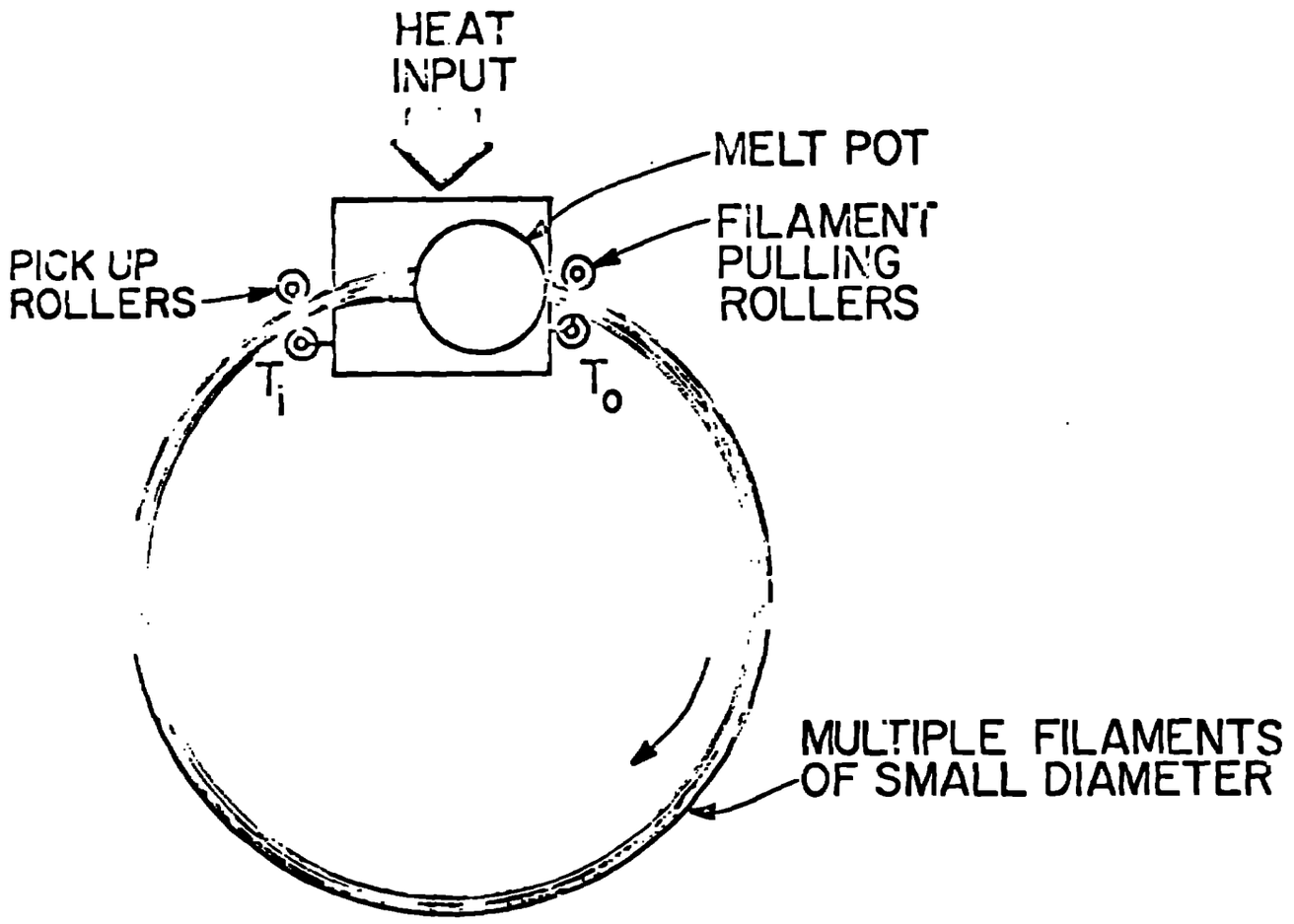

SCHEMATIC OF A FILAMENT SPACE RADIATOR

Fig. 12

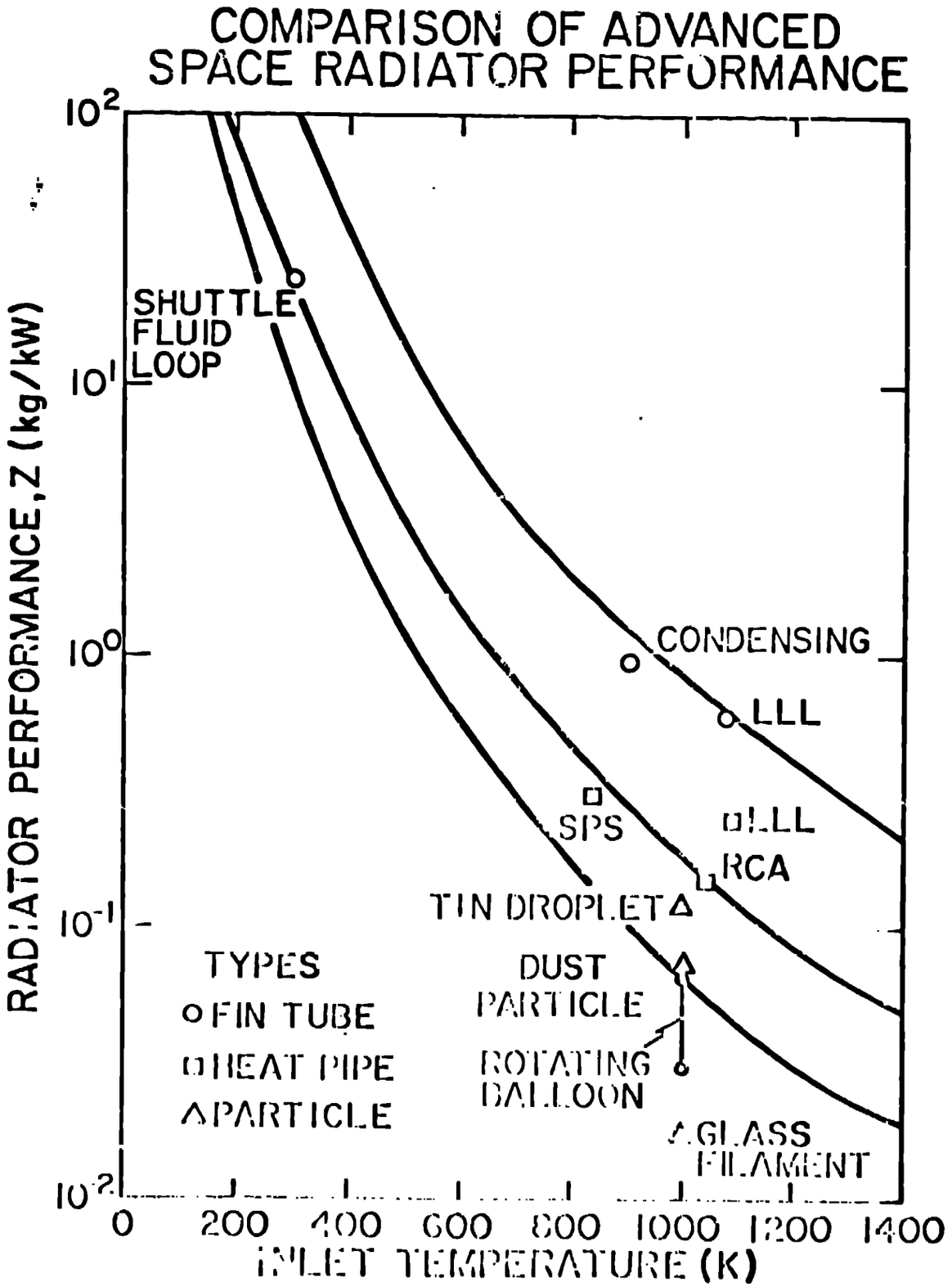
COMPARISON OF ADVANCED
SPACE RADIATOR PERFORMANCE
RADIATOR PERFORMANCE, Z (kg/kW)
10^2
10^1
10^0
10^{-1}
10^{-2}
SHUTTLE
FLUID
LOOP
CONDENSING
LLL
SPS
LLL
RCA
TIN DROPLET
TYPES
FIN TUBE
HEAT PIPE
PARTICLE
DUST
PARTICLE
ROTATING
BALLOON
GLASS
FILAMENT
0
200
400
600
800
1000
1200
1400
INLET TEMPERATURE (K)